FCC Measurement/Technical Report on

WLAN and Bluetooth module JODY-W377

FCC ID: XPYJODYW377
IC: 8595A-JODYW377

Test Report Reference: MDE_UBLOX_2030_FCC_05

Test Laboratory:
7layers GmbH
Borsigstrasse 11
40880 Ratingen
Germany

Deutsche Akkreditierungsstelle
D-PL-12140-01-01
D-PL-12140-01-02
D-PL-12140-01-03

Note:
The following test results relate only to the devices specified in this document. This report shall not be reproduced in parts without the written approval of the test laboratory.

Table of Contents

1 Applied Standards and Test Summary 3

1.1 Applied Standards 3

1.2 FCC-IC Correlation Table 4

1.3 Measurement Summary 4

2 Revision History / Signatures 6

3 Administrative Data 7

3.1 Testing Laboratory 7

3.2 Project Data 7

3.3 Applicant Data 7

3.4 Manufacturer Data 8

4 Test object Data 9

4.1 General EUT Description 9

4.2 EUT Main components 9

4.3 Ancillary Equipment 11

4.4 Auxiliary Equipment 12

4.5 EUT Setups 12

4.6 Operating Modes / Test Channels 12

4.7 Product labelling 18

5 Test Results 19

5.1 Dynamic Frequency Selection - U-NII Detection Bandwidth 19

5.2 Dynamic Frequency Selection - Channel Availability Check Time 23

5.3 Dynamic Frequency Selection - In-Service Monitoring for Channel Move Time, Channel Closing Transmission Time and Non-Occupancy Period 27

5.4 Dynamic Frequency Selection - Statistical Performance Check 30

6 Test Equipment 53

6.1 Test Equipment Hardware 53

6.2 Test Equipment Software 53

7 Antenna Factors, Cable Loss and Sample Calculations 54

7.1 LISN R&S ESH3-Z5 (150 kHz – 30 MHz) 54

7.2 Antenna R&S HFH2-Z2 (9 kHz – 30 MHz) 55

7.3 Antenna R&S HL562 (30 MHz – 1 GHz) 56

7.4 Antenna R&S HF907 (1 GHz – 18 GHz) 57

7.5 Antenna EMCO 3160-09 (18 GHz – 26.5 GHz) 58

7.6 Antenna EMCO 3160-10 (26.5 GHz – 40 GHz) 59

8 Measurement Uncertainties 60

9 Photo Report 61

1 APPLIED STANDARDS AND TEST SUMMARY

1.1 APPLIED STANDARDS

Type of Authorization
Certification for an Intentional Radiator (Digital Device / Spread Spectrum).

Applicable FCC Rules

Prepared in accordance with the requirements of FCC Rules and Regulations as listed in 47 CFR Ch.1 Parts 2 (10-1-21 Edition) and 15 (10-1-21 Edition). The following subparts are applicable to the results in this test report.

Part 2, Subpart J - Equipment Authorization Procedures, Certification

Part 15, Subpart C – Intentional Radiators

§ 15.201 Equipment authorization requirement

Part 15, Subpart E – Unlicensed National Information Infrastructure Devices

§ 15.403 Definitions

§ 15.407 General technical requirements

Note:
The DFS tests were selected and performed with reference to KDB 905462 D02 UNII DFS Compliance Procedures New Rules v02, 2016-04-08 "COMPLIANCE MEASUREMENT PROCEDURES FOR UNLICENSED-NATIONAL INFORMATION INFRASTRUCTURE DEVICES OPERATING IN THE 5250-5350 MHz AND 5470-5725 MHz BANDS INCORPORATING DYNAMIC FREQUENCY SELECTION".

1.2 FCC-IC CORRELATION TABLE

Correlation of measurement requirements for UNII / LE-LAN (e.g. WLAN 5 GHz) equipment from FCC and IC

UNII equipment

Measurement	FCC reference	IC reference
Conducted emissions on AC Mains	§ 15.207	RSS-Gen Issue 5: 8.8
Occupied bandwidth	§ 15.403 (26 dB) / § 15.407 (e) (6 dB)	RSS-247 Issue 2: 6.2.1.1, 6.2.2.1, 6.2.3.1 (99%) RSS-247 Issue 2: 6.2.4.1 (6 dB)
Maximum conducted output power	§ 15.407 (a) (1) to (8), (11)	RSS-247 Issue 2: 6.2.1.1, 6.2.2.1, 6.2.3.1, 6.2.4.1
Maximum power spectral density	§ 15.407 (a) (1) to (8), (12)	RSS-247 Issue 2: 6.2.1.1, 6.2.2.1, 6.2.3.1, 6.2.4.1
Transmitter undesirable emissions; General Field Strength Limits, Restricted Bands	§ 15.407 (b) § 15.209 (a)	RSS-Gen Issue 5: 6.13/8.9/8.10; RSS-247 Issue 2: 3.3/6.2 6.2.1.2, 6.2.2.2, 6.2.3.2, 6.2.4.2
Frequency stability	§ 15.407 (g)	RSS-Gen Issue 5: 6.11/8.11
Transmit Power Control (TPC) and Dynamic Frequency Selection (DFS)	§ 15.407 (h)	RSS-247 Issue 2: 6.2.2.1, 6.2.3.1, 6.3
Antenna requirement	§ 15.203 / 15.204 § 15.407 (a) (9)	RSS-Gen Issue 5: 8.3
Receiver spurious emissions	–	-

1.3 MEASUREMENT SUMMARY

47 CFR CHAPTER I FCC PART 15 Subpart E §15.407 **FCC §15.31, §15.407 (h)**

Dynamic Frequency Selection - U-NII Detection Bandwidth
The measurement was performed according to KDB 905462 **Final Result**

OP-Mode	**Setup**	**Date**	**FCC**	**IC**
Radio Technology				
WLAN a	S04_377_AB02	2023-10-16	Passed	Passed
WLAN ax 80 MHz MIMO	S04_377_AB02	2023-10-16	Passed	Passed
WLAN n 40 MHz MIMO	S04_377_AB02	2023-10-16	Passed	Passed

47 CFR CHAPTER I FCC PART 15 Subpart E §15.407 **FCC §15.31, §15.407 (h)**

Dynamic Frequency Selection - Channel Availability Check Time
The measurement was performed according to KDB 905462 **Final Result**

OP-Mode	**Setup**	**Date**	**FCC**	**IC**
Radio Technology				
WLAN a	S04_377_AB02	2023-10-16	Passed	Passed

47 CFR CHAPTER I FCC PART 15 Subpart E §15.407 **FCC §15.31, §15.407 (h)**

Dynamic Frequency Selection - In-Service Monitoring for Channel Move Time, Channel Closing Transmission Time and Non-Occupancy Period
The measurement was performed according to KDB 905462 **Final Result**

OP-Mode	**Setup**	**Date**	**FCC**	**IC**
Radio Technology				
WLAN ax 80 MHz	S04_377_AB02	2023-10-16	Passed	Passed

47 CFR CHAPTER I FCC PART 15 Subpart E §15.407 **FCC §15.31, §15.407 (h)**

Dynamic Frequency Selection - Statistical Performance Check
The measurement was performed according to KDB 905462 **Final Result**

OP-Mode	**Setup**	**Date**	**FCC**	**IC**
Radio Technology				
WLAN a	S04_377_AB02	2023-10-19	Passed	Passed
WLAN n 40 MHz MIMO	S04_377_AB02	2023-10-19	Passed	Passed
WLAN ax 80 MHz MIMO	S04_377_AB02	2023-10-17	Passed	Passed

N/A: Not applicable
N/P: Not performed

2 REVISION HISTORY / SIGNATURES

Report version control			
Version	**Release date**	**Change Description**	**Version validity**
initial	2023-10-30	--	valid
--	--	--	--

COMMENT: This report is a DFS Master only report. For the relevant DFS Slave, 99 % BW, Output Power and Power Density tests see test report MDE_UBLOX_2030_FCC_02

(responsible for accreditation scope)
Dipl.-Ing. Marco Kullik

(responsible for testing and report)
Dipl.-Ing. Daniel Gall

7 layers GmbH, Borsigstr. 11
40880 Ratingen, Germany
Phone +49 (0)2102 749 0

3 ADMINISTRATIVE DATA

3.1 TESTING LABORATORY

Company Name:	7layers GmbH
Address:	Borsigstr. 11 40880 Ratingen Germany

The test facility is accredited by the following accreditation organisation:

Laboratory accreditation no:	DAkkS D-PL-12140-01-01| -02 | -03
FCC Designation Number:	DE0015
FCC Test Firm Registration:	929146
ISED CAB Identifier	DE0007; ISED#: 3699A
Responsible for accreditation scope:	Dipl.-Ing. Marco Kullik
Report Template Version:	2022-05-25

3.2 PROJECT DATA

Responsible for testing and report:	Dipl.-Ing. Daniel Gall
Employees who performed the tests:	documented internally at 7Layers
Date of Report:	2023-10-30
Testing Period:	2023-10-16 to 2023-10-19

3.3 APPLICANT DATA

Company Name:	u-blox AG
Address:	Zürcherstrasse 68 8800 Thalwil Switzerland
Contact Person:	Filip Kruzela

3.4 MANUFACTURER DATA

Company Name:	please see Applicant Data
Address:	
Contact Person:	

4 TEST OBJECT DATA

4.1 GENERAL EUT DESCRIPTION

Kind of Device product description	Host-based module with WLAN and Bluetooth technology.
Product name	JODY-W3
Type	JODY-W377-00A
Declared EUT data by the supplier	
Voltage Type	DC
Voltage Level	1.8 V + 3.3 V
Tested Modulation Type	OFDM
Specific product description	The EUT is a Bluetooth and WLAN module. In the 5 GHz band it supports SISO and MIMO Mode for WLAN. Supported WLAN modes are a, n, ac and ax with 20 MHz (mode a, n, ac, ax), 40 MHz (mode n, ac, ax) and 80 MHz (mode ac, ax) BW. The ax Mode Supports MU-MIMO and OFDMA. The U-NII bands 1, 2A, 2C and 3 are supported. For this report the EUT is a slave without radar detection in the relevant DFS bands.
Ports of the device	Enclosure Data DC Antenna The EUT is a module with solder pads for surface mounting, so no cables were connected to the EUT itself.
Antenna	External / max. 2 dBi
Datarates	WLAN a: up to 56 Mbit WLAN n: up to 300 Mbit WLAN ac: up to 867 Mbit WLAN ax: up to 1201 Mbit
Special software used for testing	The test modes were set by scripts and command line commands provided by the applicant on an auxiliary computer board.
Transmit Power Control	Supported
Power level of the EUT	22.7 dBm (E.I.R.P.), 9.1 dBm/MHz (full resource units) / 10.8 (one resource unit)
User Access Restriction	The applicant confirms that information regarding the parameters of the detected waveforms is not accessible to the end user.
Channel Loading System Type	IP based system

Declared data by the laboratory	
Used antenna ports during testing	Both antenna ports were connected to the test setup.
Antenna Assembly gain used for DFS Threshold Level	0 dBi (The applicant intends to use various antennas that may also be lower than 2 dBi)
Used threshold level	-64 dBm (power spectral density > 10 dBm/MHz results in -64 dBm threshold which is also the used threshold since assumed antenna gain is 0 dBi)
Channel loading	The applicant provided a script that generates traffic at irregular intervals. The amount of traffic was set by the laboratory to comply with the > 17 % DC criterion.
Pulse Type Generation	Pulses were randomly generated using Rohde & Schwarz K6 Pulse sequencer.

4.2 EUT MAIN COMPONENTS

Sample Name	**Sample Code**	**Description**
EUT 377 ab02	DE1015152ab02	
Sample Parameter	**Value**	
Serial No.	I316009C380AE380600	
HW Version	05	
SW Version	17.68.1.p88-17.26.1.p88-MXM5X17287_V0V1	
Comment	EUT used as Master	

Sample Name	**Sample Code**	**Description**
EUT 377 ae02	DE1015152ae02	
Sample Parameter	**Value**	
Serial No.	I316009C380A7940600	
HW Version	05	
SW Version	17.68.1.p88-17.26.1.p88-MXM5X17287_V0V1	
Comment	EUT used as Client	

NOTE:The short description is used to simplify the identification of the EUT in this test report.

4.3 ANCILLARY EQUIPMENT

For the purposes of this test report, ancillary equipment is defined as equipment which is used in conjunction with the EUT to provide operational and control features to the EUT. It is necessary to configure the system in a typical fashion, as a customer would normally use it. But nevertheless Ancillary Equipment can influence the test results.

Device	**Details (Manufacturer, Type Model, OUT Code)**	**Description**
-	-	-

4.4 AUXILIARY EQUIPMENT

For the purposes of this test report, auxiliary equipment is defined as equipment which is used temporarily to enable operational and control features especially used for the tests of the EUT which is not used during normal operation or equipment that is used during the tests in combination with the EUT but is not subject of this test report. It is necessary to configure the system in a typical fashion, as a customer would normally use it.
But nevertheless Auxiliary Equipment can influence the test results.

Device	**Details (Manufacturer, Type Model, HW, SW, S/N)**	**Description**
AUX1	UBLOX, JODY-Carrier Board, REV C, - , 10000001898798018001	Supply and Port connector board
AUX21	Toradex, , -, -,	Board Computer for setting modes

4.5 EUT SETUPS

This chapter describes the combination of EUTs and equipment used for testing. The rationale for selecting the EUTs, ancillary and auxiliary equipment and interconnecting cables, is to test a representative configuration meeting the requirements of the referenced standards.

Setup	**Combination of EUTs**	**Description and Rationale**
S04_377_AB02	EUT 377 ab02, EUT 377 ae02, AUX21, AUX1,	Conducted DFS Setup

4.6 OPERATING MODES / TEST CHANNELS / RADAR PULSE CALIBRATION

This chapter describes the operating modes of the EUTs used for testing.

U-NII-Subband 2A 5250 - 5350 MHz			**U-NII-Subband 2C 5470 - 5725 MHz**			**Nom. BW**
low	**mid**	**high**	**low**	**mid**	**high**	**20 MHz**
-	-	-	100	-	-	**Ch.-No.**
-	-	-	5500	-	-	**MHz**

low	**mid**	**high**	**low**	**mid**	**high**	**40 MHz**
-	-	-	102	-	-	**Ch.-No.**
-	-	-	5510	-	-	**MHz**

low	**mid**	**high**	**low**	**mid**	**high**	**80 MHz**
-	-	-	106	-	-	**Ch.-No.**
-	-	-	5530	-	-	**MHz**

Channel Loading Duty Cycle

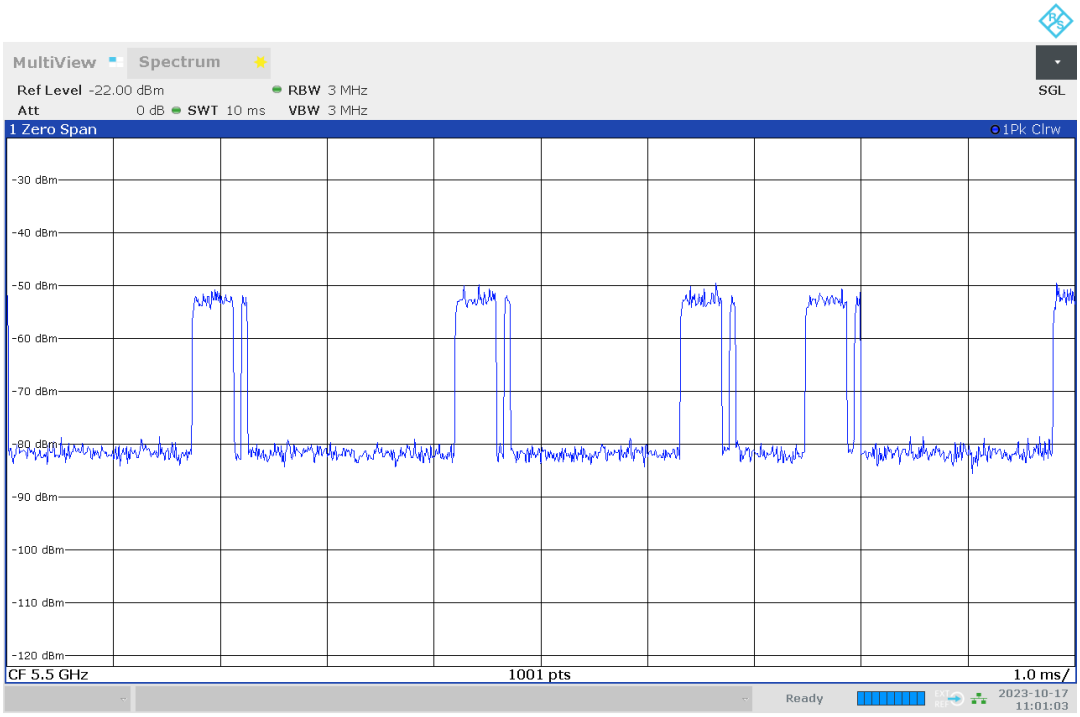

203 of 1001 pts above -60dBm = 20.3 % DC

Radar Pulse Calibration

Intended Radar Pulse Level: -64 dBm

Setup:

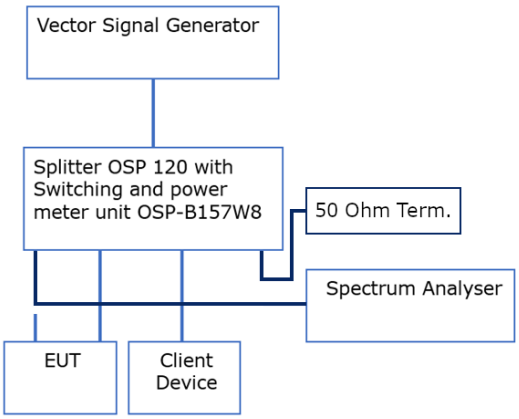

Calibration Setup for Antenna 1

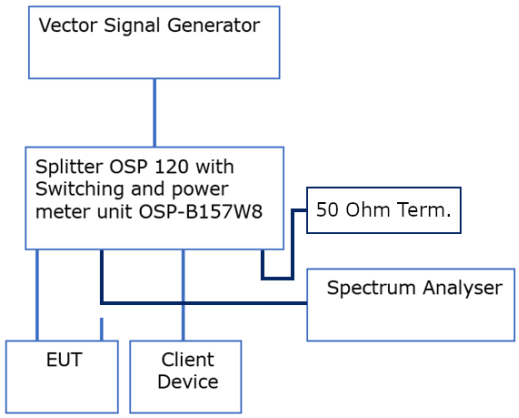

Calibration Setup for Antenna 2

The path that showed lower attenuation for pulse type zero was used only for calibration of pulse types 1 to 6.

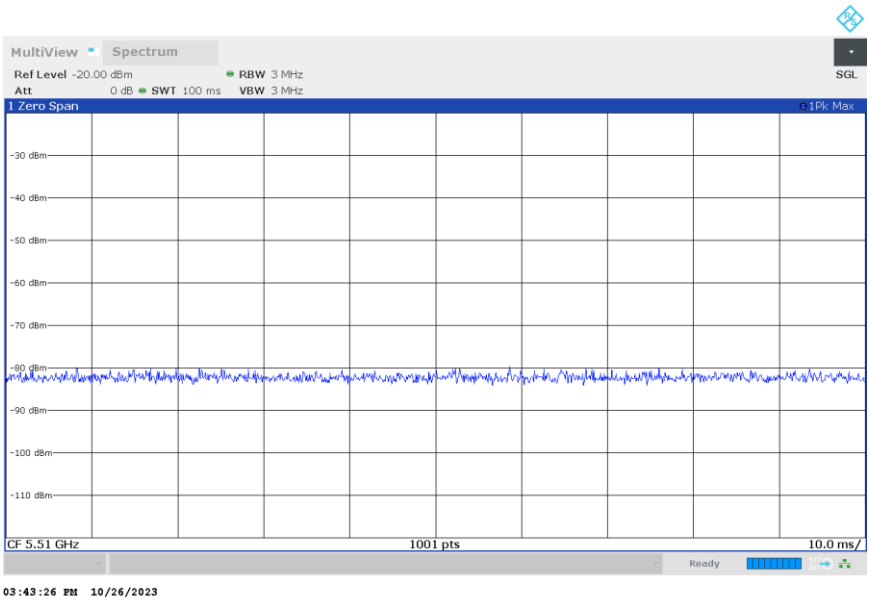

Noise Floor

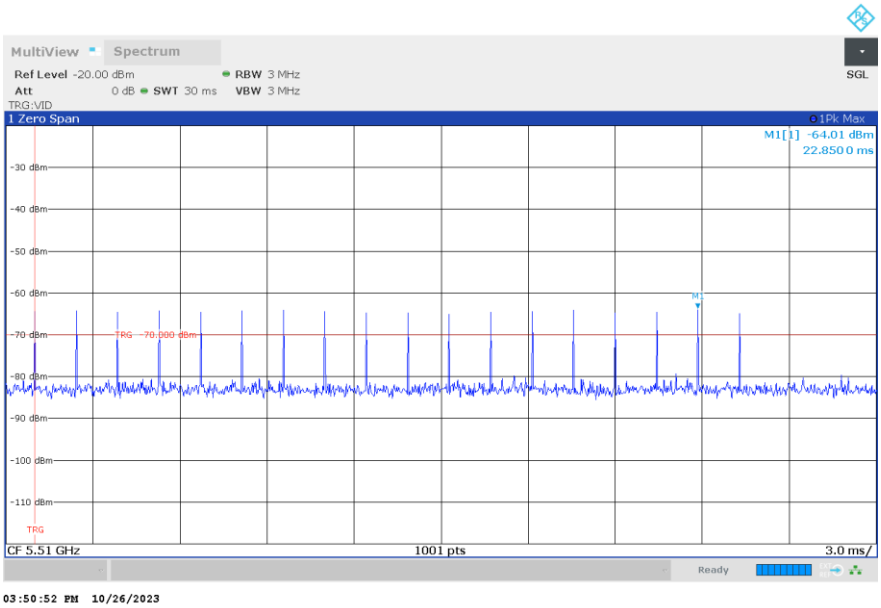

Pulse Type 0

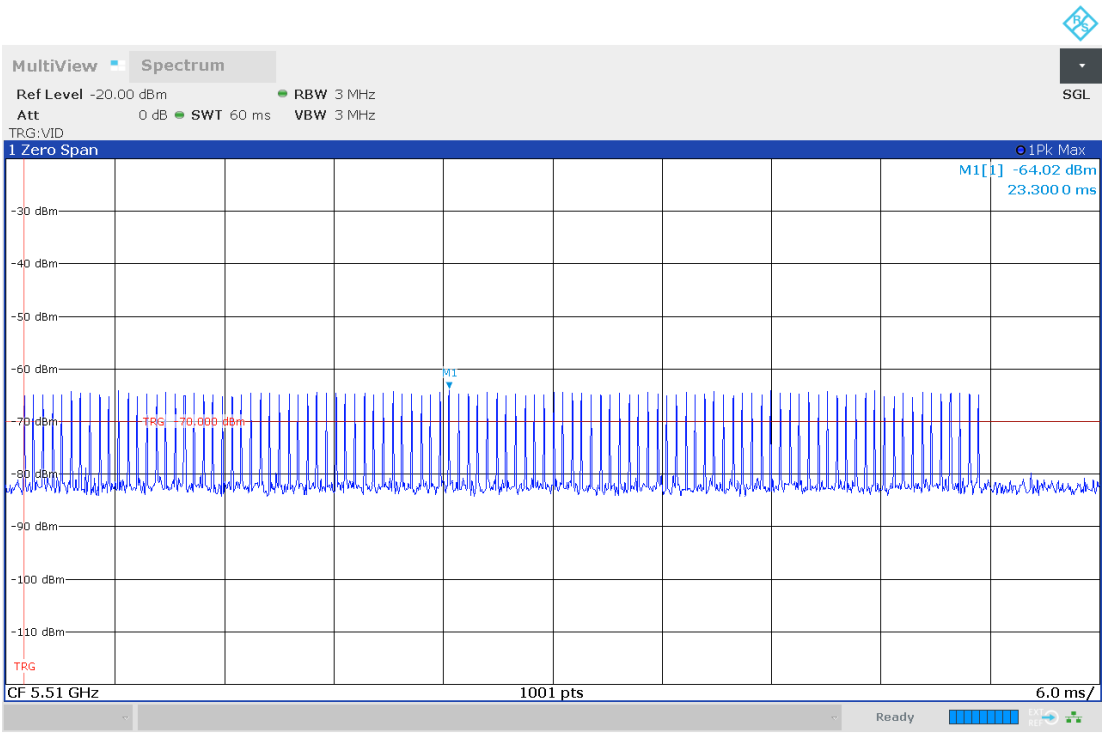

03:53:10 PM 10/26/2023

Pulse Type 1

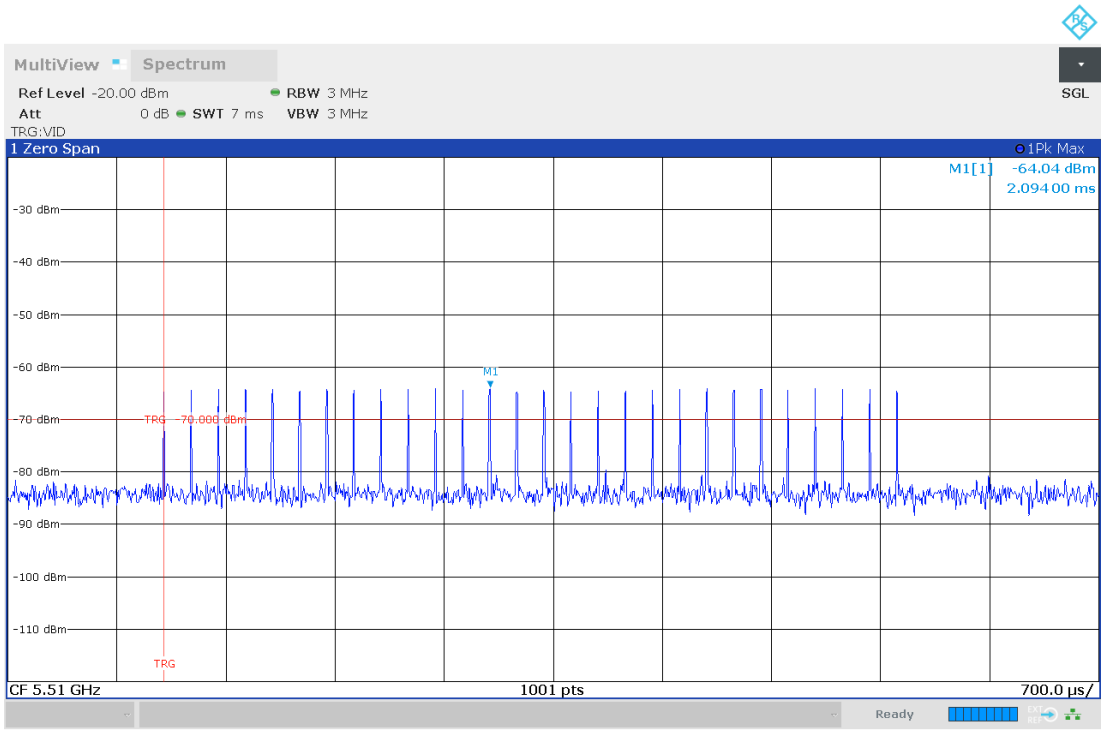

03:55:28 PM 10/26/2023

Pulse 2

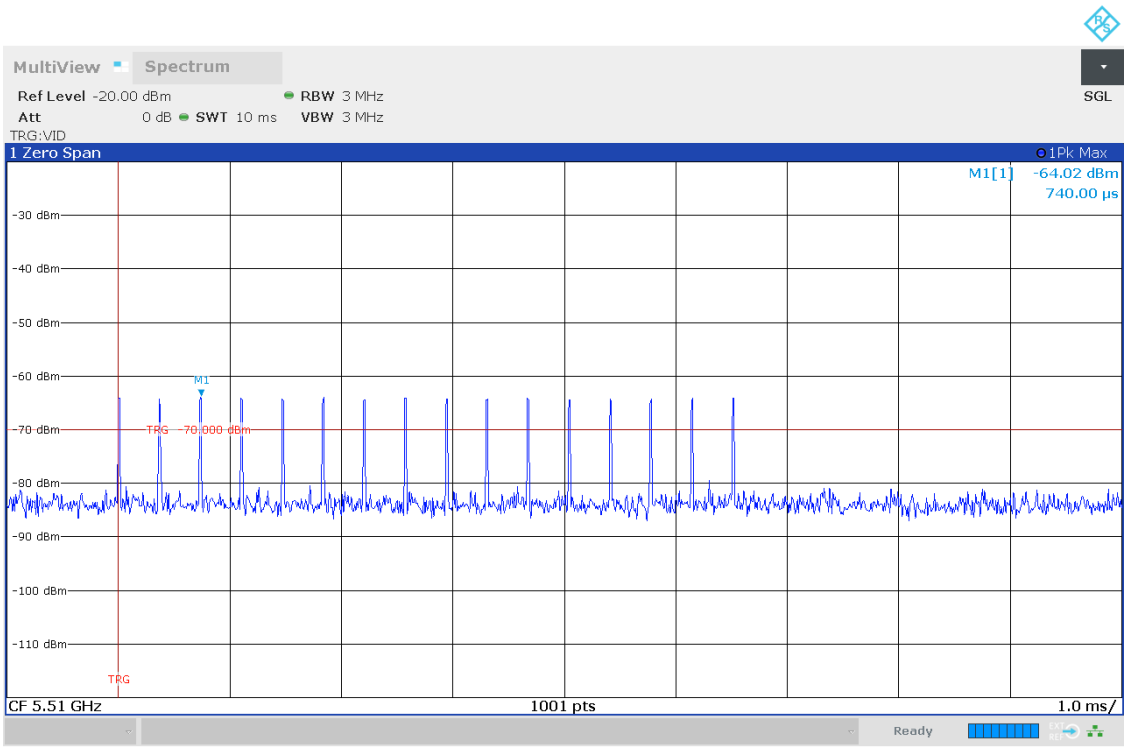

Pulse Type 3

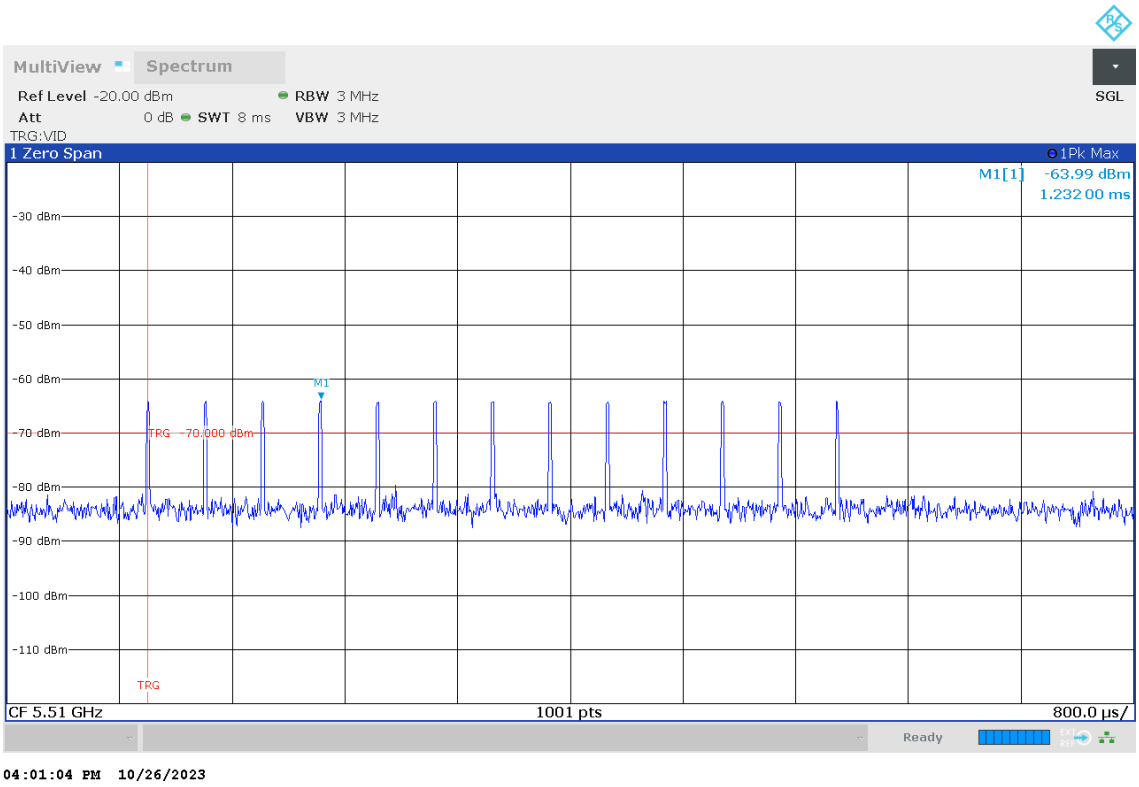

Pulse Type 4

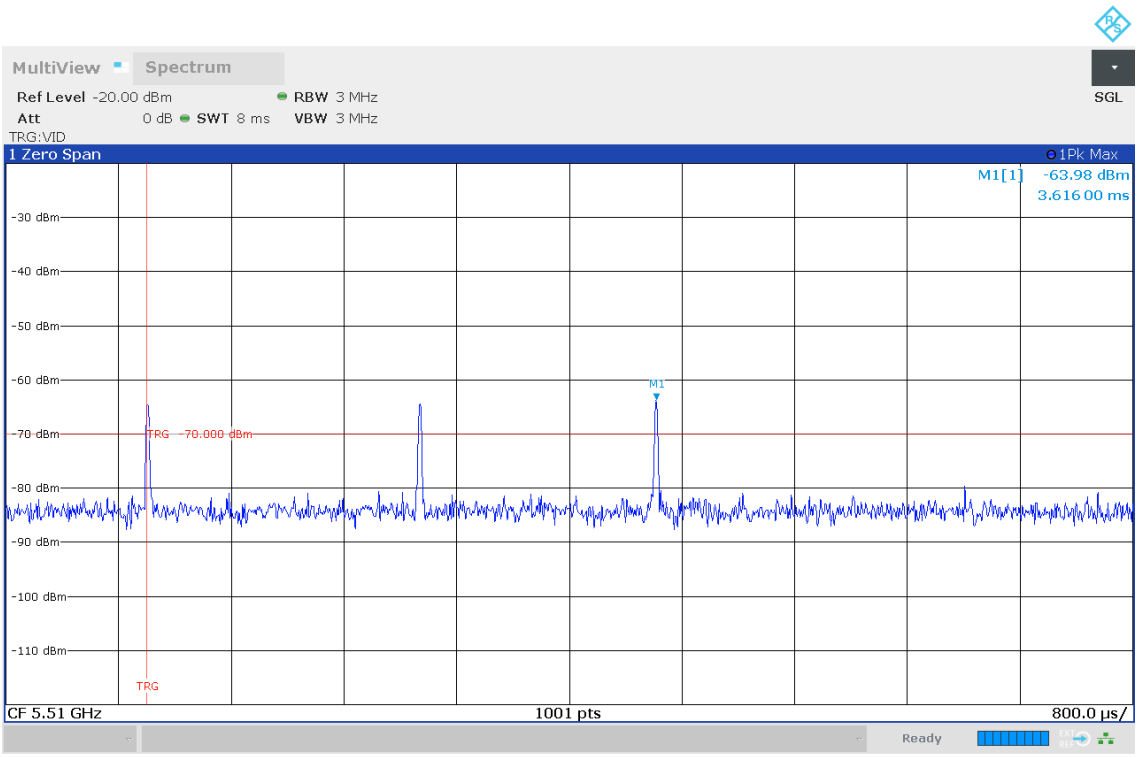

04:08:59 PM 10/26/2023

Pulse Type 5

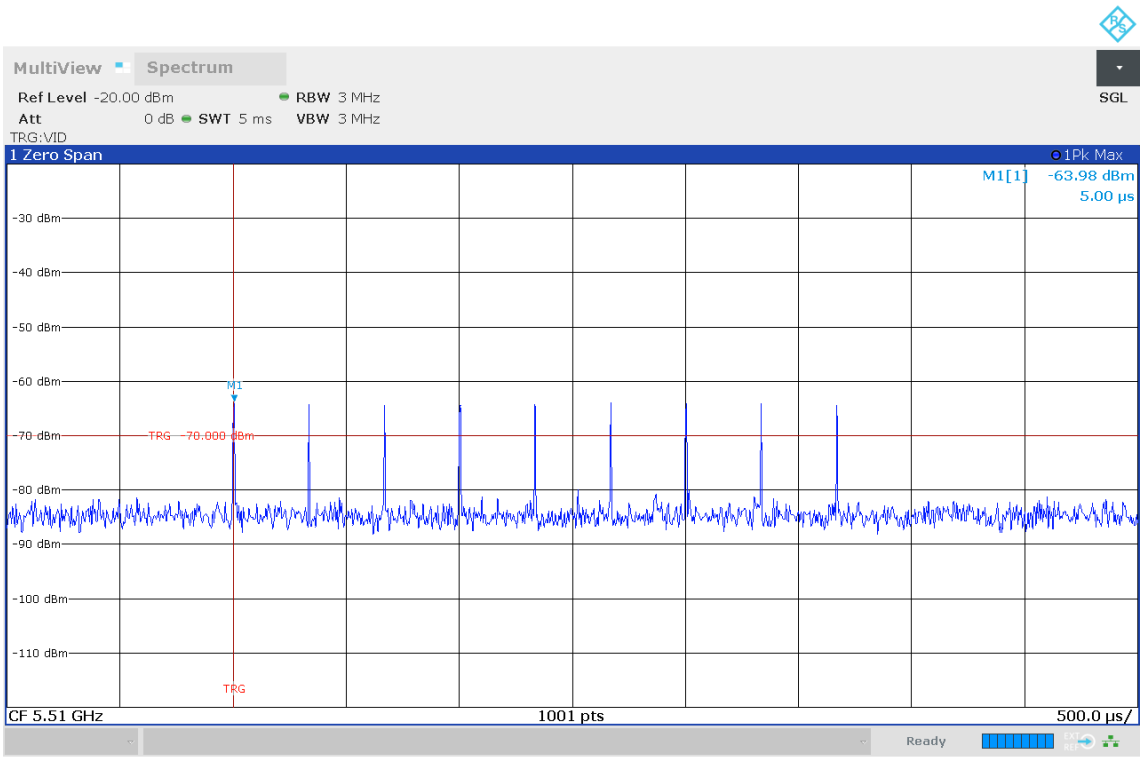

04:18:18 PM 10/26/2023

Pulse Type 6

4.7 PRODUCT LABELLING

4.7.1 FCC ID LABEL

Please refer to the documentation of the applicant.

4.7.2 LOCATION OF THE LABEL ON THE EUT

Please refer to the documentation of the applicant.

5 TEST RESULTS

5.1 DYNAMIC FREQUENCY SELECTION - U-NII DETECTION BANDWIDTH

Standard **FCC Part 15 Subpart E**

The test was performed according to:
KDB 905462

5.1.1 TEST DESCRIPTION

The Equipment Under Test (EUT) was set up in a shielded room for the DFS measurements.

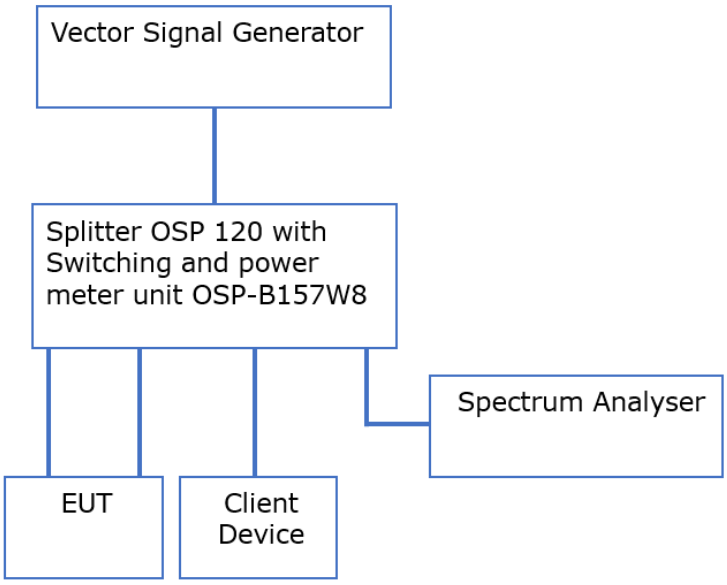

Since the DFS Master shall be tested stand alone, the DFS Client was connected but not activated.

After activating the EUT, a radar pulse of type 0 was send on mid channel frequency from the radar signal generator and the response was noted. This was repeated 9 further times.

If at least 9 of the 10 pulses were recognized by the device, the radar pulse frequency was increased or decreased by 5 MHz and the test was repeated. If the detection rate falls below 9 pulses, the step size is reduced to 1 MHz from the previous 5 MHz step until detection rate falls below 9 again. The result is compared to the 99 % Bandwidth.

5.1.2 TEST REQUIREMENTS / LIMITS

FCC Part 15, Subpart E, §15.407 (h) (2)
The device must sense for radar signals at 100 percent of its emission bandwidth.
The minimum DFS detection threshold for devices with a maximum e.i.r.p. of 200 mW to 1 W is −64 dBm. For devices that operate with less than 200 mW e.i.r.p. and a power spectral density of less than 10 dBm in a 1 MHz band, the minimum detection threshold is −62 dBm. The detection threshold is the received power averaged over 1 microsecond referenced to a 0 dBi antenna.

5.1.3 TEST PROTOCOL

Ambient temperature: 24 °C
Air Pressure: 1014 hPa
Humidity: 43 %

Radio Technology	**TX Frequency [MHz]**	**Channel BW [MHz]**	**Radar Test Signal #**	**FL (MHz)**	**FH (MHz)**	**Detection BW [MHz]**	**Max. 99 % BW [MHz]**
WLAN a	5500	20	Radar Type 0	5490	5510	20	18.9
WLAN n 40 MHz MIMO	5510	40	Radar Type 0	5490	5530	40	37.8
WLAN ax 80 MHz MIMO	5530	80	Radar Type 0	5490	5570	80	78.5

Remark: Channel Move feature was deactivated for this test.
Detection of radar pulses was monitored by console interface.
Please see next sub-clause for the measurement results.

5.1.4 MEASUREMENT RESULT

Radar Pulse Frequency Deviation from Channel Centre Frequency [MHz]	Channel Centre Frequency [MHz]	Ch. BW [MHz]	Detected	TX Frequency [MHz]	Ch. BW [MHz]	Detected	TX Frequency [MHz]	Ch. BW [MHz]	Detected
-40							5530	80	10
-39							5530	80	10
-38							5530	80	10
-37							5530	80	10
-36							5530	80	10
-35							5530	80	10
-30							5530	80	10
-25							5530	80	10
-20				5510	40	10	5530	80	10
-19				5510	40	10	5530	80	10
-18				5510	40	10	5530	80	10
-17				5510	40	10	5530	80	10
-16				5510	40	10	5530	80	10
-15				5510	40	10	5530	80	10
-10	5500	20	10	5510	40	10	5530	80	10
-9	5500	20	10	5510	40	10	5530	80	10
-8	5500	20	10	5510	40	10	5530	80	10
-7	5500	20	10	5510	40	10	5530	80	10
-6	5500	20	10	5510	40	10	5530	80	10
-5	5500	20	10	5510	40	10	5530	80	10
0 (Centre Freq.)	5500	20	10	5510	40	10	5530	80	10
5	5500	20	10	5510	40	10	5530	80	10
6	5500	20	10	5510	40	10	5530	80	10
7	5500	20	10	5510	40	10	5530	80	10
8	5500	20	10	5510	40	10	5530	80	10
9	5500	20	10	5510	40	10	5530	80	10
10	5500	20	10	5510	40	10	5530	80	10
15				5510	40	10	5530	80	10
16				5510	40	10	5530	80	10
17				5510	40	10	5530	80	10
18				5510	40	10	5530	80	10
19				5510	40	10	5530	80	10
20				5510	40	10	5530	80	10
25							5530	80	10
30							5530	80	10
35							5530	80	10
36							5530	80	10
37							5530	80	10
38							5530	80	10
39							5530	80	10
40							5530	80	10

5.1.5 TEST EQUIPMENT USED

- R&S TS8997

5.2 DYNAMIC FREQUENCY SELECTION - CHANNEL AVAILABILITY CHECK TIME

Standard **FCC Part 15 Subpart E**

The test was performed according to:
KDB 905462

5.2.1 TEST DESCRIPTION

The Equipment Under Test (EUT) was set up in a shielded room for the DFS measurements.

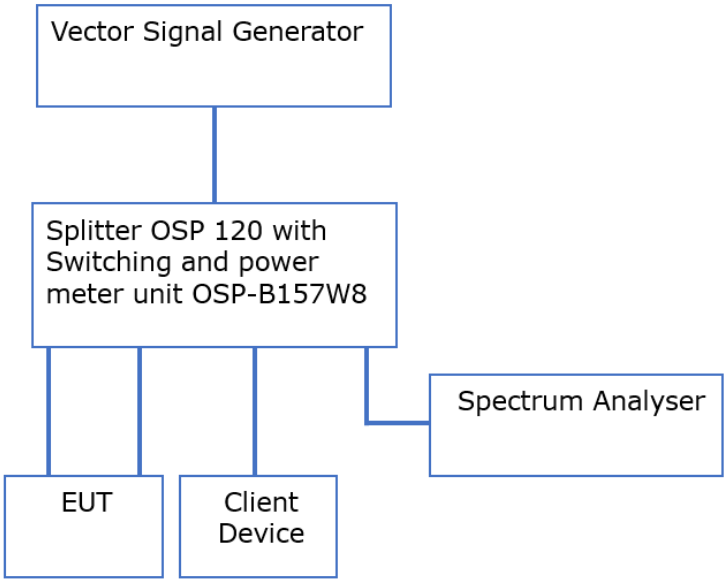

The blocked channel list is reset by restart of EUT and AP Mode is afterwards activated by software script.

When the AP script is started, the measurement sweep on the spectrum analyser is started in parallel.

Analyzer settings:
•Resolution Bandwidth (RBW): 3 MHz
•Video Bandwidth (VBW): 3 MHz
•Trace: Clear/Write
•Sweeps: Single Sweep
•Sweeptime: 150 s
•Detector: Peak

5.2.2 TEST REQUIREMENTS / LIMITS

FCC Part 15, Subpart E, §15.407 (h) (2) (ii)
Channel Availability Check Time. A U-NII device shall check if there is a radar system already operating on the channel before it can initiate a transmission on a channel and when it has to move to a new channel. The U-NII device may start using the channel if no radar signal with a power level greater than the interference threshold values listed in paragraph (h)(2) of this section, is detected within 60 seconds.

FCC Part 15, Subpart E, §15.407 (h) (2)
The minimum DFS detection threshold for devices with a maximum e.i.r.p. of 200 mW to 1 W is −64 dBm. For devices that operate with less than 200 mW e.i.r.p. and a power spectral density of less than 10 dBm in a 1 MHz band, the minimum detection threshold is −62 dBm. The detection threshold is the received power averaged over 1 microsecond referenced to a 0 dBi antenna.

5.2.3 TEST PROTOCOL

Ambient temperature: 24 °C
Air Pressure: 1014 hPa
Humidity: 43 %

Radio Technology	TX Frequency [MHz]	Radar Test Signal #	Detected?	Transmissions within 150 s?
WLAN a	5500	Type 0 @ 0 to 6 s	YES	NO
WLAN a	5500	Type 0 @ 54 to 60 s	YES	NO

Remark: Please see next sub-clause for the measurement plots.

5.2.4 MEASUREMENT PLOTS

Radio Technology = WLAN a
(S04_377_AB02)

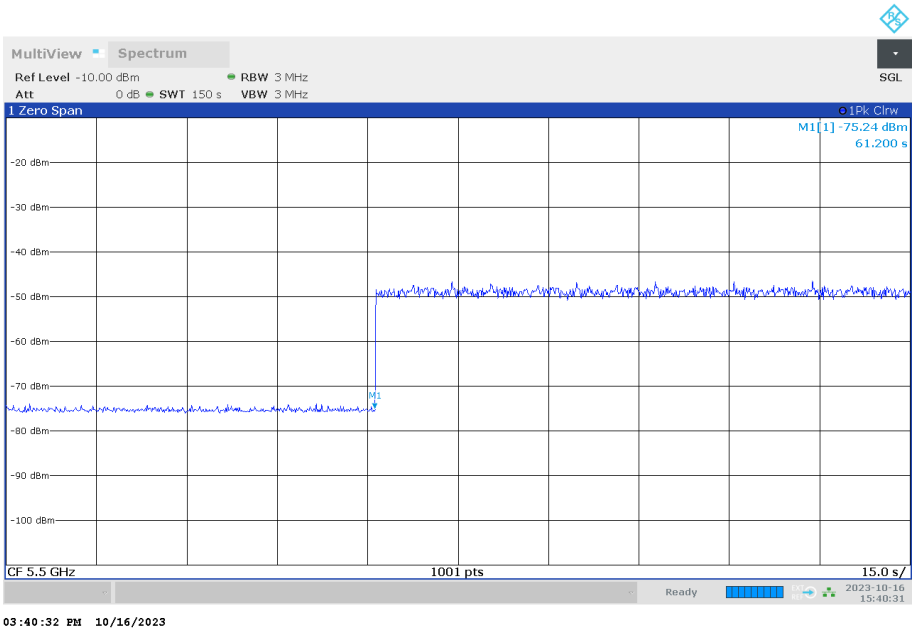

Startup time measurement: Startup of device is 61.2 s after start of AP script, resulting in a startup time of 1.2 s. For the following tests marker 1 is kept at 61.2 s and delta markers indicating the first 6 respectively last 6 seconds of the calculated CAC time are given.

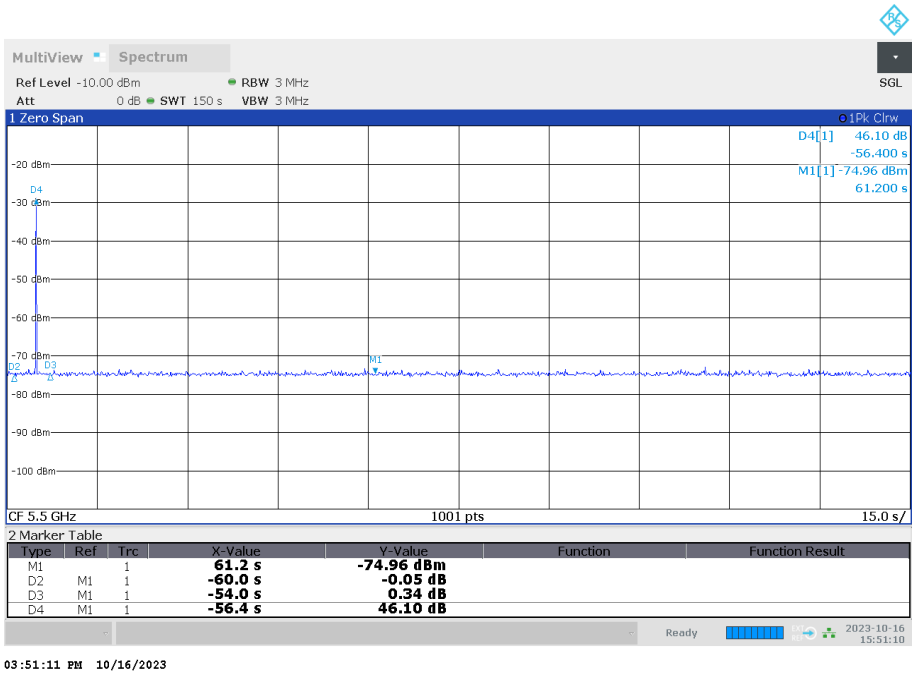

Pulse at beginning of CAC time

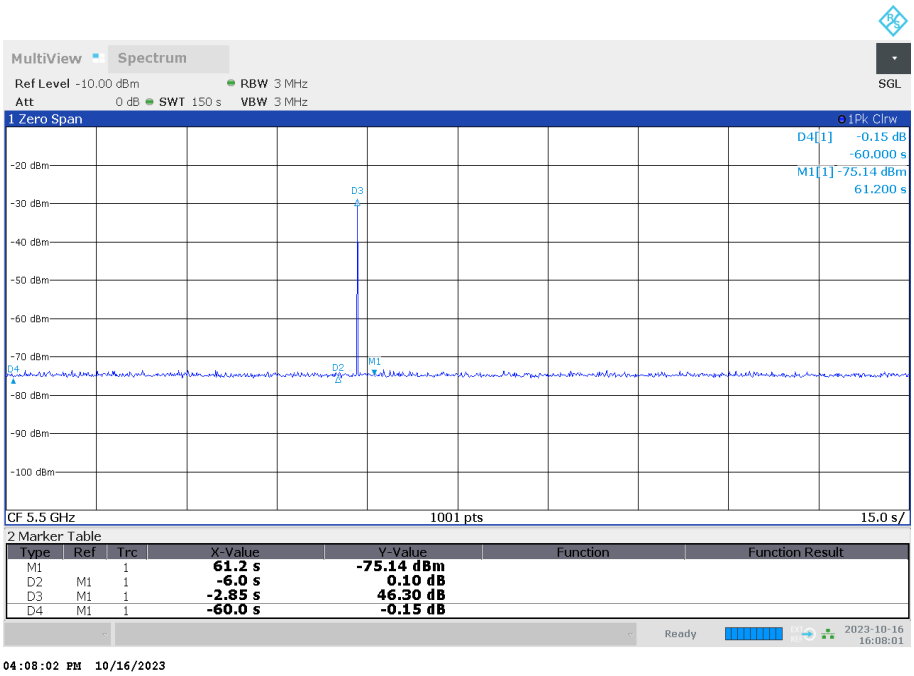

Pulse at end of CAC time

5.2.5 TEST EQUIPMENT USED

- R&S TS8997

5.3 DYNAMIC FREQUENCY SELECTION - IN-SERVICE MONITORING FOR CHANNEL MOVE TIME, CHANNEL CLOSING TRANSMISSION TIME AND NON-OCCUPANCY PERIOD

Standard **FCC Part 15 Subpart E**

The test was performed according to:
KDB 905462

5.3.1 TEST DESCRIPTION

The Equipment Under Test (EUT) was set up in a shielded room for the DFS measurements.

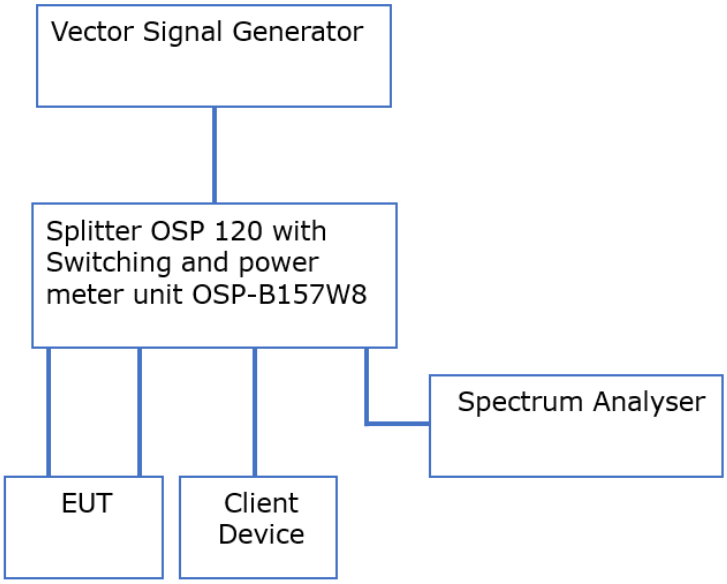

The Master and Client EUT were powered and connected to each other at maximum supported bandwidth. Afterwards the script for traffic generation was started.

With established connection, a radar pulse of type 0 was send from the radar pulse generator. At the same time the spectrum analyser is triggered by the radar signal generator and a trace is recorded:

Analyzer settings:
•Resolution Bandwidth (RBW): 3 MHz
•Video Bandwidth (VBW): 3 MHz
•Trace: Clear/Write
•Sweeps: Single Sweep
•Sweeptime: 20 s
•Detector: Peak
•Trigger: External

In addition to the plot, also the trace data is recorded to calculate the Channel Closing Time.

Afterwards the test is repeated with a sweep time of 32 minutes to monitor the Non-occupancy period.

5.3.2 TEST REQUIREMENTS / LIMITS

FCC Part 15, Subpart E, §15.407 (h) (2) (iii)
Channel Move Time. After a radar's presence is detected, all transmissions shall cease on the operating channel within 10 seconds. Transmissions during this period shall consist of normal traffic for a maximum of 200 ms after detection of the radar signal. In addition, intermittent management and control signals can be sent during the remaining time to facilitate vacating the operating channel.

FCC Part 15, Subpart E, §15.407 (h) (2) (iii)
Non-occupancy Period. A channel that has been flagged as containing a radar system, either by a channel availability check or in-service monitoring, is subject to a non-occupancy period of at least 30 minutes. The non-occupancy period starts at the time when the radar system is detected.

Limits according KDB 905462 D02 UNII DFS Compliance Procedures New Rules

Parameter	Value
Non-occupancy period	Minimum 30 minutes
Channel Availability Check Time	60 seconds
Channel Move Time	10 seconds See Note 1.
Channel Closing Transmission Time	200 milliseconds + an aggregate of 60 milliseconds over remaining 10 second period. See Notes 1 and 2.
Note 1: *Channel Move Time* and the *Channel Closing Transmission Time* should be performed with Radar Type 0. The measurement timing begins at the end of the Radar Type 0 burst. Note 2: The *Channel Closing Transmission Time* is comprised of 200 milliseconds starting at the beginning of the *Channel Move Time* plus any additional intermittent control signals required to facilitate a *Channel* move (an aggregate of 60 milliseconds) during the remainder of the 10 second period. The aggregate duration of control signals will not count quiet periods in between transmissions.	

5.3.3 TEST PROTOCOL

Ambient temperature: 24 °C
Air Pressure: 1014 hPa
Humidity: 43 %

Operational Mode	**Radio Technology**	**TX Frequency [MHz]**	**Radar Test Signal #**	**Channel Closing Transmission Time following the first 200 ms [ms]**	**Limit [ms]**	**Channel Move Time [s]**	**Limit [s]**	**Transmissions in Non-Occupancy Period?**
Master	WLAN ax 80 MHz	5510	Type 0	0.0	60	0	10	None

Remark: Please see next sub-clause for the measurement plot.

5.3.4 MEASUREMENT PLOTS

Radio Technology = WLAN ax 80 MHz
(S04_377_AB02)

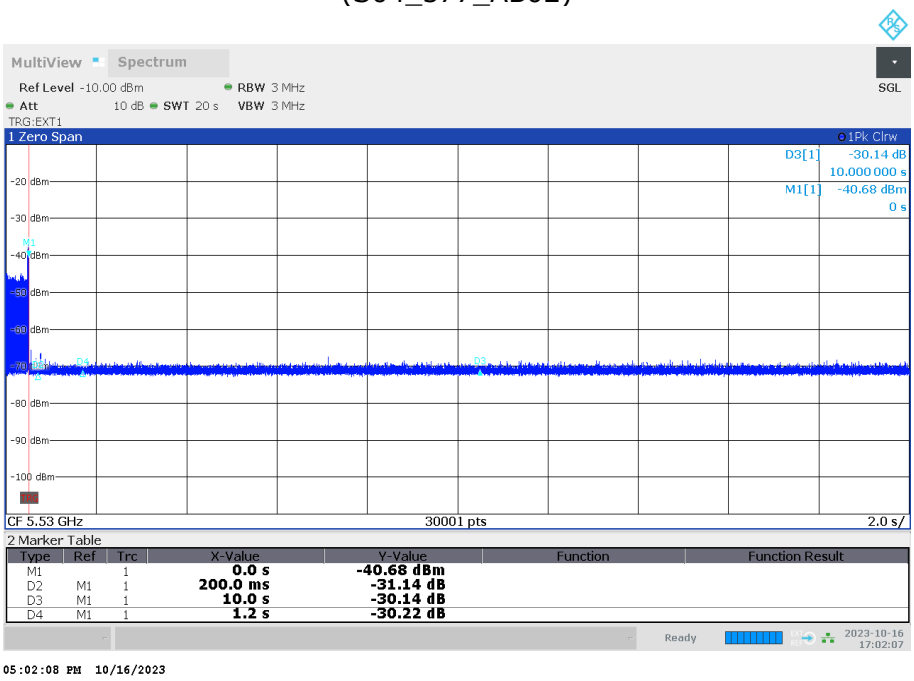

Channel Closing and Move Time (M1 = Radar Pulse)

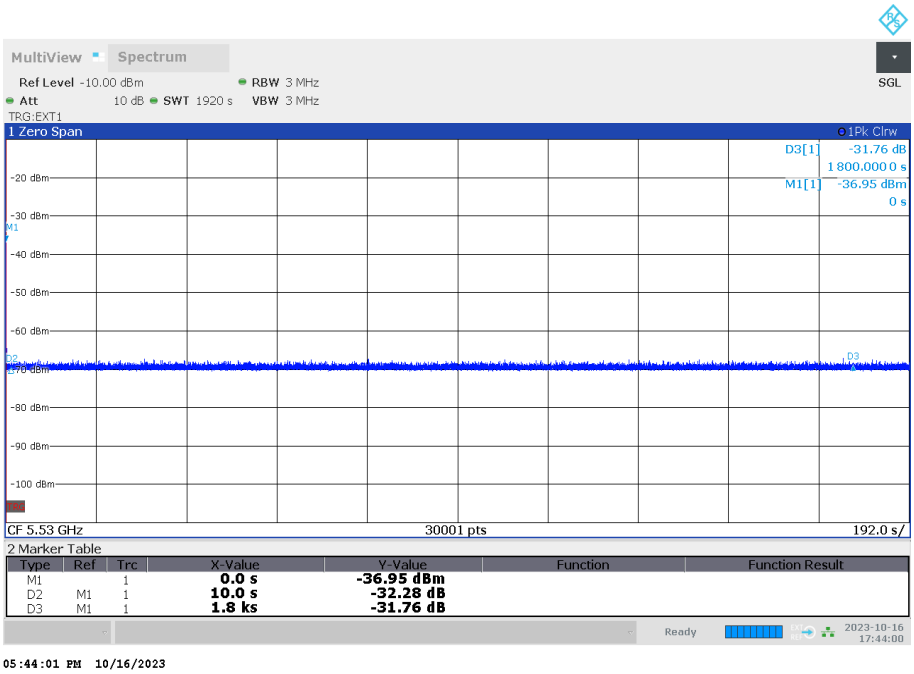

Non-Occupancy Period

5.3.5 TEST EQUIPMENT USED

- R&S TS8997

5.4 DYNAMIC FREQUENCY SELECTION - STATISTICAL PERFORMANCE CHECK

Standard **FCC Part 15 Subpart E**

The test was performed according to:
KDB 905462

5.4.1 TEST DESCRIPTION

The Equipment Under Test (EUT) was set up in a shielded room for the DFS measurements.

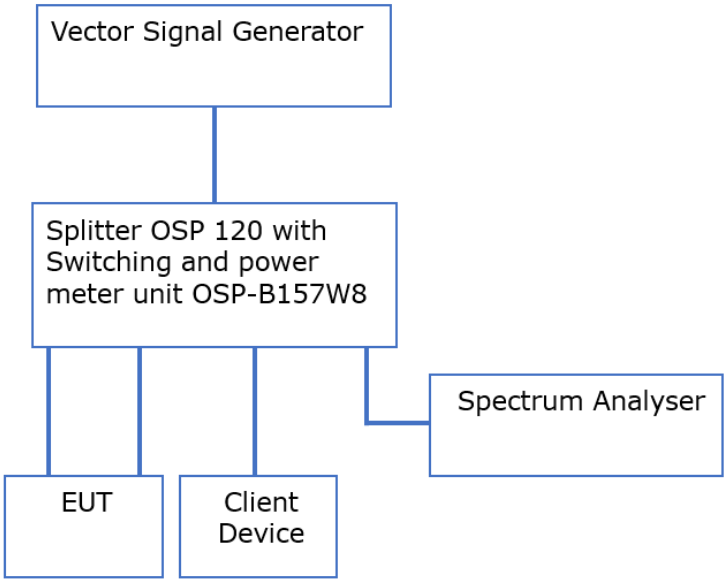

The Master and Client EUT were powered and connected to each other at maximum supported bandwidth. Afterwards the script for traffic generation was started.

Using command line commands provided by the customer, the device's channel move functionality was deactivated and non-occupancy period reduced to 1 s to reduce testing time.

Detection of radar pulse is monitored by console interface.

30 unique pulses of radar type 1 to 6 are send while for each type 10 pulses are send at the lower end of the 99 % detection BW, 10 pulses at the higher end of the detection BW and 10 are send mid channel.

For each send pulse detection is recorded.

Testing is repeated for all supported channel bandwidths.

5.4.2 TEST REQUIREMENTS / LIMITS

FCC Part 15, Subpart E, §15.407 (h) (2)
U-NII devices operating with any part of its 26 dB emission bandwidth in the 5.25-5.35 GHz and 5.47-5.725 GHz bands shall employ a DFS radar detection mechanism to detect the presence of radar systems and to avoid co-channel operation with radar systems. Operators shall only use equipment with a DFS mechanism that is turned on when operating in these bands. The device must sense for radar signals at 100 percent of its emission bandwidth. The minimum DFS detection threshold for devices with a maximum e.i.r.p. of 200 mW to 1 W is −64 dBm. For devices that operate with less than 200 mW e.i.r.p. and a power spectral density of less than 10 dBm in a 1 MHz band, the minimum detection threshold is −62 dBm. The detection threshold is the received power averaged over 1 microsecond referenced to a 0 dBi antenna.

Limits according KDB 905462 D02 UNII DFS Compliance Procedures New Rules

Table 5 – Short Pulse Radar Test Waveforms

Radar Type	Pulse Width (µsec)	PRI (µsec)	Number of Pulses	Minimum Percentage of Successful Detection	Minimum Number of Trials
0	1	1428	18	See Note 1	See Note 1
1	1	Test A: 15 unique PRI values randomly selected from the list of 23 PRI values in Table 5a	$\text{Roundup}\left\{\left(\frac{1}{360}\right)\cdot\left(\frac{19\cdot 10^6}{\text{PRI}_{\mu sec}}\right)\right\}$	60%	30
		Test B: 15 unique PRI values randomly selected within the range of 518-3066 µsec, with a minimum increment of 1 µsec, excluding PRI values selected in Test A			
2	1-5	150-230	23-29	60%	30
3	6-10	200-500	16-18	60%	30
4	11-20	200-500	12-16	60%	30
Aggregate (Radar Types 1-4)				80%	120
Note 1: Short Pulse Radar Type 0 should be used for the detection bandwidth test, channel move time, and channel closing time tests.					

Table 6 – Long Pulse Radar Test Waveform

Radar Type	Pulse Width (µsec)	Chirp Width (MHz)	PRI (µsec)	Number of Pulses per *Burst*	Number of *Bursts*	Minimum Percentage of Successful Detection	Minimum Number of Trials
5	50-100	5-20	1000-2000	1-3	8-20	80%	30

Table 7 – Frequency Hopping Radar Test Waveform

Radar Type	Pulse Width (µsec)	PRI (µsec)	Pulses per Hop	Hopping Rate (kHz)	Hopping Sequence Length (msec)	Minimum Percentage of Successful Detection	Minimum Number of Trials
6	1	333	9	0.333	300	70%	30

5.4.3 TEST PROTOCOL

Ambient temperature: 24 - 26 °C
Air Pressure: 986 - 1014 hPa
Humidity: 40 %

Radio Technology	TX Freq. [MHz]	Radar Test Signal #	Number of send pulses	Number of detected pulses	Successful Detection Percentage [%]	Limit [%]	Margin to Limit [%]
WLAN a	5500	Type 1	30	30	100	60	40
WLAN a	5500	Type 2	30	30	100	60	40
WLAN a	5500	Type 3	30	30	100	60	40
WLAN a	5500	Type 4	30	30	100	60	40
WLAN a	5500	Aggregate 1-4	120	120	100	80	20
WLAN a	5500	Type 5	30	30	100	80	20
WLAN a	5500	Type 6	30	30	100	70	30
WLAN n 40 MHz MIMO	5510	Type 1	30	30	100	60	40
WLAN n 40 MHz MIMO	5510	Type 2	30	30	100	60	40
WLAN n 40 MHz MIMO	5510	Type 3	30	30	100	60	40
WLAN n 40 MHz MIMO	5510	Type 4	30	30	100	60	40
WLAN n 40 MHz MIMO	5510	Aggregate 1-4	120	120	100	80	20
WLAN n 40 MHz MIMO	5510	Type 5	30	30	100	80	20
WLAN n 40 MHz MIMO	5510	Type 6	30	30	100	70	30
WLAN ax 80 MHz MIMO	5530	Type 1	30	30	100	60	40
WLAN ax 80 MHz MIMO	5530	Type 2	30	30	100	60	40
WLAN ax 80 MHz MIMO	5530	Type 3	30	30	100	60	40
WLAN ax 80 MHz MIMO	5530	Type 4	30	30	100	60	40
WLAN ax 80 MHz MIMO	5530	Aggregate 1-4	120	120	100	80	20
WLAN ax 80 MHz MIMO	5530	Type 5	30	29	96.7	80	16.7
WLAN ax 80 MHz MIMO	5530	Type 6	30	30	100	70	30

Remark: Please see next sub-clause for the measurement results and radar pulse definition.

5.4.4 MEASUREMENT RESULTS

20 MHz Bandwidth Pulse Types 1 to 4 and 6

RADAR TYPE 1 Table Random					RADAR TYPE 1 5a				
Trial #	Number of Pulses per Burst	Pulse Width (µsec)	PRI (µs)	Detection (yes/no)	Trial #	Number of Pulses per Burst	Pulse Width (µsec)	PRI (µs)	Detection (yes/no)
1	59	1	899	yes	1	102	1	518	yes
2	21	1	2586	yes	2	99	1	538	yes
3	51	1	1042	yes	3	95	1	558	yes
4	21	1	2564	yes	4	92	1	578	yes
5	18	1	2990	yes	5	89	1	598	yes
6	23	1	2343	yes	6	86	1	618	yes
7	54	1	979	yes	7	83	1	638	yes
8	20	1	2761	yes	8	81	1	658	yes
9	70	1	760	yes	9	78	1	678	yes
10	22	1	2435	yes	10	76	1	698	yes
11	26	1	2050	yes	11	74	1	718	yes
12	77	1	692	yes	12	72	1	738	yes
13	23	1	2316	yes	13	70	1	758	yes
14	29	1	1847	yes	14	68	1	778	yes
15	25	1	2131	yes	15	67	1	798	yes

RADAR TYPE 2					RADAR TYPE 3				
Trial #	Number of Pulses per Burst	Pulse Width (µsec)	PRI (µs)	Detection (yes/no)	Trial #	Number of Pulses per Burst	Pulse Width (µsec)	PRI (µs)	Detection (yes/no)
1	28	2.6	174	yes	1	16	10	367	yes
2	27	1.2	227	yes	2	18	6.9	369	yes
3	29	1.7	212	yes	3	18	8.8	320	yes
4	28	3.5	212	yes	4	17	8.4	384	yes
5	24	4.6	181	yes	5	18	6.7	261	yes
6	26	2.3	225	yes	6	16	8.7	357	yes
7	27	4.6	188	yes	7	17	6	251	yes
8	28	4.7	219	yes	8	18	7.7	270	yes
9	23	4.3	152	yes	9	17	9.2	296	yes
10	27	4.6	222	yes	10	17	6.5	441	yes
11	26	4.4	185	yes	11	17	9.8	403	yes
12	27	4.5	206	yes	12	17	9	411	yes
13	28	2.2	195	yes	13	18	8.3	346	yes
14	27	3	210	yes	14	16	8.4	319	yes
15	24	1.6	175	yes	15	18	8.9	375	yes
16	25	3.1	172	yes	16	17	6.3	230	yes
17	25	3.8	226	yes	17	17	9.3	456	yes
18	28	3.5	211	yes	18	16	8.4	424	yes
19	28	2.9	170	yes	19	17	6.4	218	yes
20	27	3.9	211	yes	20	18	6.8	255	yes
21	28	4.1	162	yes	21	17	6.3	255	yes
22	28	1.9	178	yes	22	16	7.8	400	yes
23	29	1.7	176	yes	23	17	8.7	487	yes
24	23	4.2	164	yes	24	16	8.2	333	yes
25	27	3.3	187	yes	25	17	6.3	442	yes
26	23	2.5	189	yes	26	16	7.9	450	yes
27	26	1.9	226	yes	27	17	6.5	446	yes
28	23	3.8	176	yes	28	17	6.3	493	yes
29	29	3	186	yes	29	17	8.7	388	yes
30	28	4.3	189	yes	30	17	9	353	yes

RADAR TYPE 4					RADAR TYPE 6				
Trial #	Number of Pulses per Burst	Pulse Width (µsec)	PRI (µs)	Detection (yes/no)	Trial #	Number of Pulses per Hop	Pulse Width (µsec)	PRI (µs)	Detection (yes/no)
1	13	14	407	yes	1	9	1	333	yes
2	14	14.6	348	yes	2	9	1	333	yes
3	13	13.6	398	yes	3	9	1	333	yes
4	13	19.7	416	yes	4	9	1	333	yes
5	14	15.2	363	yes	5	9	1	333	yes
6	12	17.2	487	yes	6	9	1	333	yes
7	14	15.2	310	yes	7	9	1	333	yes
8	14	13.2	265	yes	8	9	1	333	yes
9	16	18.2	246	yes	9	9	1	333	yes
10	14	20	385	yes	10	9	1	333	yes
11	14	14.8	266	yes	11	9	1	333	yes
12	15	13.5	235	yes	12	9	1	333	yes
13	14	15.5	484	yes	13	9	1	333	yes
14	12	17.3	439	yes	14	9	1	333	yes
15	14	17.5	434	yes	15	9	1	333	yes
16	14	17.1	469	yes	16	9	1	333	yes
17	15	11	452	yes	17	9	1	333	yes
18	15	15.5	340	yes	18	9	1	333	yes
19	13	16	355	yes	19	9	1	333	yes
20	14	11.9	457	yes	20	9	1	333	yes
21	14	16.5	292	yes	21	9	1	333	yes
22	13	13.8	401	yes	22	9	1	333	yes
23	15	14	324	yes	23	9	1	333	yes
24	15	18.2	312	yes	24	9	1	333	yes
25	15	13.5	394	yes	25	9	1	333	yes
26	13	14.5	375	yes	26	9	1	333	yes
27	14	15.6	301	yes	27	9	1	333	yes
28	14	16.6	423	yes	28	9	1	333	yes
29	14	14.8	267	yes	29	9	1	333	yes
30	12	18.8	279	yes	30	9	1	333	yes

40 MHz Bandwidth Pulse Types 1 to 4 and 6

RADAR TYPE 1 Table 5a					RADAR TYPE 1				
Trial #	Number of Pulses per Burst	Pulse Width (µsec)	PRI (µs)	Detection (yes/no)	Trial #	Number of Pulses per Burst	Pulse Width (µsec)	PRI (µs)	Detection (yes/no)
1	102	1	518	yes	1	59	1	899	yes
2	99	1	538	yes	2	21	1	2586	yes
3	95	1	558	yes	3	51	1	1042	yes
4	92	1	578	yes	4	21	1	2564	yes
5	89	1	598	yes	5	18	1	2990	yes
6	86	1	618	yes	6	23	1	2343	yes
7	83	1	638	yes	7	54	1	979	yes
8	81	1	658	yes	8	20	1	2761	yes
9	78	1	678	yes	9	70	1	760	yes
10	76	1	698	yes	10	22	1	2435	yes
11	74	1	718	yes	11	26	1	2050	yes
12	72	1	738	yes	12	77	1	692	yes
13	70	1	758	yes	13	23	1	2316	yes
14	68	1	778	yes	14	29	1	1847	yes
15	67	1	798	yes	15	25	1	2131	yes

RADAR TYPE 2					RADAR TYPE 3				
Trial #	Number of Pulses per Burst	Pulse Width (µsec)	PRI (µs)	Detection (yes/no)	Trial #	Number of Pulses per Burst	Pulse Width (µsec)	PRI (µs)	Detection (yes/no)
1	28	2.6	174	yes	1	16	10	367	yes
2	27	1.2	227	yes	2	18	6.9	369	yes
3	29	1.7	212	yes	3	18	8.8	320	yes
4	28	3.5	212	yes	4	17	8.4	384	yes
5	24	4.6	181	yes	5	18	6.7	261	yes
6	26	2.3	225	yes	6	16	8.7	357	yes
7	27	4.6	188	yes	7	17	6	251	yes
8	28	4.7	219	yes	8	18	7.7	270	yes
9	23	4.3	152	yes	9	17	9.2	296	yes
10	27	4.6	222	yes	10	17	6.5	441	yes
11	26	4.4	185	yes	11	17	9.8	403	yes
12	27	4.5	206	yes	12	17	9	411	yes
13	28	2.2	195	yes	13	18	8.3	346	yes
14	27	3	210	yes	14	16	8.4	319	yes
15	24	1.6	175	yes	15	18	8.9	375	yes
16	25	3.1	172	yes	16	17	6.3	230	yes
17	25	3.8	226	yes	17	17	9.3	456	yes
18	28	3.5	211	yes	18	16	8.4	424	yes
19	28	2.9	170	yes	19	17	6.4	218	yes
20	27	3.9	211	yes	20	18	6.8	255	yes
21	28	4.1	162	yes	21	17	6.3	255	yes
22	28	1.9	178	yes	22	16	7.8	400	yes
23	29	1.7	176	yes	23	17	8.7	487	yes
24	23	4.2	164	yes	24	16	8.2	333	yes
25	27	3.3	187	yes	25	17	6.3	442	yes
26	23	2.5	189	yes	26	16	7.9	450	yes
27	26	1.9	226	yes	27	17	6.5	446	yes
28	23	3.8	176	yes	28	17	6.3	493	yes
29	29	3	186	yes	29	17	8.7	388	yes
30	28	4.3	189	yes	30	17	9	353	yes

RADAR TYPE 4					RARAR TYPE 6				
Trial #	**Number of Pulses per Burst**	**Pulse Width (µsec)**	**PRI (µs)**	**Detection (yes/no)**	**Trial #**	**Number of Pulses per Hop**	**Pulse Width (µsec)**	**PRI (µs)**	**Detection (yes/no)**
1	13	14	407	yes	1	9	1	333	yes
2	14	14.6	348	yes	2	9	1	333	yes
3	13	13.6	398	yes	3	9	1	333	yes
4	13	19.7	416	yes	4	9	1	333	yes
5	14	15.2	363	yes	5	9	1	333	yes
6	12	17.2	487	yes	6	9	1	333	yes
7	14	15.2	310	yes	7	9	1	333	yes
8	14	13.2	265	yes	8	9	1	333	yes
9	16	18.2	246	yes	9	9	1	333	yes
10	14	20	385	yes	10	9	1	333	yes
11	14	14.8	266	yes	11	9	1	333	yes
12	15	13.5	235	yes	12	9	1	333	yes
13	14	15.5	484	yes	13	9	1	333	yes
14	12	17.3	439	yes	14	9	1	333	yes
15	14	17.5	434	yes	15	9	1	333	yes
16	14	17.1	469	yes	16	9	1	333	yes
17	15	11	452	yes	17	9	1	333	yes
18	15	15.5	340	yes	18	9	1	333	yes
19	13	16	355	yes	19	9	1	333	yes
20	14	11.9	457	yes	20	9	1	333	yes
21	14	16.5	292	yes	21	9	1	333	yes
22	13	13.8	401	yes	22	9	1	333	yes
23	15	14	324	yes	23	9	1	333	yes
24	15	18.2	312	yes	24	9	1	333	yes
25	15	13.5	394	yes	25	9	1	333	yes
26	13	14.5	375	yes	26	9	1	333	yes
27	14	15.6	301	yes	27	9	1	333	yes
28	14	16.6	423	yes	28	9	1	333	yes
29	14	14.8	267	yes	29	9	1	333	yes
30	12	18.8	279	yes	30	9	1	333	yes

80 MHz Bandwidth Pulse Types 1 to 4 and 6

RADAR TYPE 1 Table 5a					RADAR TYPE 1				
Trial #	Number of Pulses per Burst	Pulse Width (µsec)	PRI (µs)	Detection (yes/no)	Trial #	Number of Pulses per Burst	Pulse Width (µsec)	PRI (µs)	Detection (yes/no)
1	102	1	518	yes	1	59	1	899	yes
2	99	1	538	yes	2	21	1	2586	yes
3	95	1	558	yes	3	51	1	1042	yes
4	92	1	578	yes	4	21	1	2564	yes
5	89	1	598	yes	5	18	1	2990	yes
6	86	1	618	yes	6	23	1	2343	yes
7	83	1	638	yes	7	54	1	979	yes
8	81	1	658	yes	8	20	1	2761	yes
9	78	1	678	yes	9	70	1	760	yes
10	76	1	698	yes	10	22	1	2435	yes
11	74	1	718	yes	11	26	1	2050	yes
12	72	1	738	yes	12	77	1	692	yes
13	70	1	758	yes	13	23	1	2316	yes
14	68	1	778	yes	14	29	1	1847	yes
15	67	1	798	yes	15	25	1	2131	yes

RADAR TYPE 2					RADAR TYPE 3				
Trial #	Number of Pulses per Burst	Pulse Width (µsec)	PRI (µs)	Detection (yes/no)	Trial #	Number of Pulses per Burst	Pulse Width (µsec)	PRI (µs)	Detection (yes/no)
1	28	2.6	174	yes	1	16	10	367	yes
2	27	1.2	227	yes	2	18	6.9	369	yes
3	29	1.7	212	yes	3	18	8.8	320	yes
4	28	3.5	212	yes	4	17	8.4	384	yes
5	24	4.6	181	yes	5	18	6.7	261	yes
6	26	2.3	225	yes	6	16	8.7	357	yes
7	27	4.6	188	yes	7	17	6	251	yes
8	28	4.7	219	yes	8	18	7.7	270	yes
9	23	4.3	152	yes	9	17	9.2	296	yes
10	27	4.6	222	yes	10	17	6.5	441	yes
11	26	4.4	185	yes	11	17	9.8	403	yes
12	27	4.5	206	yes	12	17	9	411	yes
13	28	2.2	195	yes	13	18	8.3	346	yes
14	27	3	210	yes	14	16	8.4	319	yes
15	24	1.6	175	yes	15	18	8.9	375	yes
16	25	3.1	172	yes	16	17	6.3	230	yes
17	25	3.8	226	yes	17	17	9.3	456	yes
18	28	3.5	211	yes	18	16	8.4	424	yes
19	28	2.9	170	yes	19	17	6.4	218	yes
20	27	3.9	211	yes	20	18	6.8	255	yes
21	28	4.1	162	yes	21	17	6.3	255	yes
22	28	1.9	178	yes	22	16	7.8	400	yes
23	29	1.7	176	yes	23	17	8.7	487	yes
24	23	4.2	164	yes	24	16	8.2	333	yes
25	27	3.3	187	yes	25	17	6.3	442	yes
26	23	2.5	189	yes	26	16	7.9	450	yes
27	26	1.9	226	yes	27	17	6.5	446	yes
28	23	3.8	176	yes	28	17	6.3	493	yes
29	29	3	186	yes	29	17	8.7	388	yes
30	28	4.3	189	yes	30	17	9	353	yes

RADAR TYPE 4					RARAR TYPE 6				
Trial #	Number of Pulses per Burst	Pulse Width (µsec)	PRI (µs)	Detection (yes/no)	Trial #	Number of Pulses per Hop	Pulse Width (µsec)	PRI (µs)	Detection (yes/no)
1	13	14	407	yes	1	9	1	333	yes
2	14	14.6	348	yes	2	9	1	333	yes
3	13	13.6	398	yes	3	9	1	333	yes
4	13	19.7	416	yes	4	9	1	333	yes
5	14	15.2	363	yes	5	9	1	333	yes
6	12	17.2	487	yes	6	9	1	333	yes
7	14	15.2	310	yes	7	9	1	333	yes
8	14	13.2	265	yes	8	9	1	333	yes
9	16	18.2	246	yes	9	9	1	333	yes
10	14	20	385	yes	10	9	1	333	yes
11	14	14.8	266	yes	11	9	1	333	yes
12	15	13.5	235	yes	12	9	1	333	yes
13	14	15.5	484	yes	13	9	1	333	yes
14	12	17.3	439	yes	14	9	1	333	yes
15	14	17.5	434	yes	15	9	1	333	yes
16	14	17.1	469	yes	16	9	1	333	yes
17	15	11	452	yes	17	9	1	333	yes
18	15	15.5	340	yes	18	9	1	333	yes
19	13	16	355	yes	19	9	1	333	yes
20	14	11.9	457	yes	20	9	1	333	yes
21	14	16.5	292	yes	21	9	1	333	yes
22	13	13.8	401	yes	22	9	1	333	yes
23	15	14	324	yes	23	9	1	333	yes
24	15	18.2	312	yes	24	9	1	333	yes
25	15	13.5	394	yes	25	9	1	333	yes
26	13	14.5	375	yes	26	9	1	333	yes
27	14	15.6	301	yes	27	9	1	333	yes
28	14	16.6	423	yes	28	9	1	333	yes
29	14	14.8	267	yes	29	9	1	333	yes
30	12	18.8	279	yes	30	9	1	333	yes

Pulse Type 5

TYPE 5 20 MHz			TYPE 5 40 MHz		
Trial #	Detection (yes/no)	Radar Pulse Freq. [MHz]	Trial #	Detection (yes/no)	Radar Pulse Freq. [MHz]
1	yes	5500	1	yes	5510
2	yes	5500	2	yes	5510
3	yes	5500	3	yes	5510
4	yes	5500	4	yes	5510
5	yes	5500	5	yes	5510
6	yes	5500	6	yes	5510
7	yes	5500	7	yes	5510
8	yes	5500	8	yes	5510
9	yes	5500	9	yes	5510
10	yes	5500	10	yes	5510
11	yes	5497.8	11	yes	5498.3
12	yes	5494.6	12	yes	5495.1
13	yes	5494.2	13	yes	5494.7
14	yes	5496.6	14	yes	5497.1
15	yes	5497.8	15	yes	5498.3
16	yes	5493.4	16	yes	5493.9
17	yes	5495.4	17	yes	5495.9
18	yes	5498.2	18	yes	5498.7
19	yes	5497.0	19	yes	5497.5
20	yes	5497.0	20	yes	5497.5
21	yes	5503.5	21	yes	5522.9
22	yes	5501.5	22	yes	5520.9
23	yes	5503.1	23	yes	5522.5
24	yes	5506.3	24	yes	5525.7
25	yes	5506.7	25	yes	5526.1
26	yes	5504.3	26	yes	5523.7
27	yes	5503.9	27	yes	5523.3
28	yes	5503.9	28	yes	5523.3
29	yes	5506.7	29	yes	5526.1
30	yes	5501.9	30	yes	5521.3

TYPE 5 80 MHz		
Trial #	**Detection (yes/no)**	**Radar Pulse Freq. [MHz]**
1	yes	5530
2	yes	5530
3	yes	5530
4	yes	5530
5	yes	5530
6	yes	5530
7	yes	5530
8	yes	5530
9	yes	5530
10	yes	5530
11	yes	5498.0
12	yes	5494.8
13	yes	5494.4
14	yes	5496.8
15	no	5498.0
16	yes	5493.6
17	yes	5495.6
18	yes	5498.4
19	yes	5497.2
20	yes	5497.2
21	yes	5563.3
22	yes	5561.3
23	yes	5562.9
24	yes	5566.1
25	yes	5566.5
26	yes	5564.1
27	yes	5563.7
28	yes	5563.7
29	yes	5566.5
30	yes	5561.7

Trial Number : 1						
Bursts in Trial: 8						
Burst	**Number of Pulses**	**Pulse Width (µsec)**	**Chirp Width (MHz)**	**Pulse 1-to-2 Spacing (µsec)**	**Pulse 2-to-3 Spacing (µsec)**	**Start Location Within Interval (msec)**
1	3	59.6	14	1871	1615	1294
2	1	95.5	14			971
3	2	85.3	14	1913		1294
4	1	72.3	14			67
5	3	53.2	14	1145	1560	1461
6	2	54.4	14	1237		471
7	1	63.9	14			869
8	2	75.7	14	1412		548

Trial Number : 2						
Bursts in Trial: 9						
Burst	**Number of Pulses**	**Pulse Width (µsec)**	**Chirp Width (MHz)**	**Pulse 1-to-2 Spacing (µsec)**	**Pulse 2-to-3 Spacing (µsec)**	**Start Location Within Interval (msec)**
1	2	78.6	20	1262		350
2	1	82.4	20			280
3	1	84.9	20			388
4	1	64.8	20			302
5	1	86.8	20			628
6	2	83.2	20	1270		589
7	2	77.3	20	1907		731
8	2	77.4	20	1168		1240
9	1	71.5	20			240

Trial Number : 3						
Bursts in Trial: 10						
Burst	**Number of Pulses**	**Pulse Width (µsec)**	**Chirp Width (MHz)**	**Pulse 1-to-2 Spacing (µsec)**	**Pulse 2-to-3 Spacing (µsec)**	**Start Location Within Interval (msec)**
1	3	98.1	17	1524	1176	855
2	2	66.4	17	1811		373
3	3	52.2	17	1377	1791	494
4	2	90	17	1368		707
5	3	85.2	17	1183	1462	1033
6	2	97.2	17	1122		883
7	1	66.9	17			269
8	3	96.5	17	1648	1685	1186
9	1	57.4	17			856
10	3	73.6	17	1868	1696	994

Trial Number : 4						
Bursts in Trial: 11						
Burst	**Number of Pulses**	**Pulse Width (µsec)**	**Chirp Width (MHz)**	**Pulse 1-to-2 Spacing (µsec)**	**Pulse 2-to-3 Spacing (µsec)**	**Start Location Within Interval (msec)**
1	2	79.1	19	1092		484
2	2	81.9	19	1309		421
3	1	68.1	19			260
4	1	96.4	19			96
5	3	54.3	19	1237	1097	863
6	2	81.4	19	1849		607
7	2	61.8	19	1320		365
8	2	74	19	1199		320
9	2	81.6	19	1536		964
10	1	61.3	19			920
11	3	60.6	19	946	1935	163

Trial Number : 5						
Bursts in Trial: 12						
Burst	**Number of Pulses**	**Pulse Width (µsec)**	**Chirp Width (MHz)**	**Pulse 1-to-2 Spacing (µsec)**	**Pulse 2-to-3 Spacing (µsec)**	**Start Location Within Interval (msec)**
1	2	50.2	18	1490		867
2	1	54.6	18			569
3	3	58.5	18	947	1076	823
4	1	60.9	18			294
5	2	57.4	18	1221		908
6	2	84	18	1499		224
7	1	74.8	18			40
8	1	62.3	18			251
9	2	92.3	18	1339		406
10	3	96.6	18	1505	907	143
11	2	56.3	18	1288		564
12	3	56.4	18	1666	1008	441

Trial Number : 6						
Bursts in Trial: 13						
Burst	**Number of Pulses**	**Pulse Width (µsec)**	**Chirp Width (MHz)**	**Pulse 1-to-2 Spacing (µsec)**	**Pulse 2-to-3 Spacing (µsec)**	**Start Location Within Interval (msec)**
1	2	50.6	10	1129		159
2	1	77.4	10			713
3	3	83.6	10	1589	934	339
4	1	72.8	10			80
5	1	50.4	10			264
6	2	52.6	10	1480		503
7	1	50.7	10			416
8	2	91.6	10	1763		304
9	2	64.6	10	1033		237
10	2	73.8	10	1288		86
11	2	69.8	10	1547		186
12	2	79.7	10	1398		430
13	1	81.8	10			603

Trial Number : 7						
Bursts in Trial: 14						
Burst	Number of Pulses	Pulse Width (µsec)	Chirp Width (MHz)	Pulse 1-to-2 Spacing (µsec)	Pulse 2-to-3 Spacing (µsec)	Start Location Within Interval (msec)
1	2	86.4	12	1356		408
2	1	57	12			57
3	2	72.8	12	968		46
4	1	85.8	12			431
5	3	92.3	12	1235	1276	39
6	2	61.1	12	1014		746
7	2	56	12	1503		637
8	2	74.1	12	1420		270
9	1	68.7	12			650
10	1	66.6	12			660
11	1	66.4	12			413
12	1	50.4	12			294
13	1	50.4	12			496
14	3	63.8	12	978	1932	721

Trial Number : 8						
Bursts in Trial: 15						
Burst	Number of Pulses	Pulse Width (µsec)	Chirp Width (MHz)	Pulse 1-to-2 Spacing (µsec)	Pulse 2-to-3 Spacing (µsec)	Start Location Within Interval (msec)
1	1	63.8	15			594
2	2	79.7	15	1554		778
3	2	62.7	15	1550		637
4	2	97.1	15	1242		101
5	2	98	15	1030		198
6	2	84.9	15	1804		27
7	2	88.7	15	1382		785
8	2	55.5	15	980		769
9	1	71.3	15			496
10	1	54.8	15			601
11	1	98.5	15			510
12	2	76.9	15	1513		399
13	2	85.8	15	1878		554
14	1	55.4	15			724
15	1	77.2	15			686

Trial Number : 9						
Bursts in Trial: 16						
Burst	Number of Pulses	Pulse Width (µsec)	Chirp Width (MHz)	Pulse 1-to-2 Spacing (µsec)	Pulse 2-to-3 Spacing (µsec)	Start Location Within Interval (msec)
1	3	85.8	17	1061	1648	732
2	2	72.3	17	1557		665
3	2	69.2	17	1394		375
4	2	53.8	17	1568		330
5	3	91.9	17	1248	1747	621
6	2	68.5	17	1404		213
7	1	67.6	17			59
8	3	50.7	17	1636	1054	714
9	1	65.4	17			482
10	1	50.3	17			701
11	3	73.8	17	1876	1355	564
12	3	88.5	17	1085	1361	711
13	2	88.3	17	1801		327
14	3	65.9	17	969	1805	387
15	1	73.6	17			220
16	2	51.7	17	1185		403

Trial Number : 10						
Bursts in Trial: 17						
Burst	**Number of Pulses**	**Pulse Width (µsec)**	**Chirp Width (MHz)**	**Pulse 1-to-2 Spacing (µsec)**	**Pulse 2-to-3 Spacing (µsec)**	**Start Location Within Interval (msec)**
1	2	55.5	20	1407		191
2	1	58.7	20			490
3	2	88.3	20	978		655
4	3	81.4	20	1611	1366	71
5	2	56.6	20	1482		379
6	1	73.9	20			208
7	2	87.4	20	1803		110
8	2	71.1	20	1659		176
9	2	63.8	20	1634		51
10	2	89	20	1420		527
11	2	96.8	20	1687		381
12	3	51.5	20	1913	981	598
13	2	52.3	20	1682		25
14	2	83.1	20	1262		432
15	1	71.3	20			169
16	2	70.8	20	1154		310
17	3	81.8	20	1233	1230	622

Trial Number : 11						
Bursts in Trial: 18						
Burst	**Number of Pulses**	**Pulse Width (µsec)**	**Chirp Width (MHz)**	**Pulse 1-to-2 Spacing (µsec)**	**Pulse 2-to-3 Spacing (µsec)**	**Start Location Within Interval (msec)**
1	1	58.7	18			497
2	2	91	18	1490		103
3	3	73.9	18	1404	976	383
4	2	96.4	18	1555		439
5	2	90.7	18	1849		493
6	3	58.9	18	1135	1342	641
7	2	61.7	18	984		33
8	2	88	18	1683		113
9	3	80.2	18	1079	1761	187
10	2	54.4	18	1498		328
11	2	98.6	18	1453		118
12	2	84	18	1320		506
13	2	97.2	18	1319		134
14	1	87.2	18			230
15	3	83.3	18	1255	925	448
16	2	61.7	18	1804		324
17	2	92.8	18	977		468
18	1	84.1	18			528

Trial Number : 12						
Bursts in Trial: 19						
Burst	**Number of Pulses**	**Pulse Width (µsec)**	**Chirp Width (MHz)**	**Pulse 1-to-2 Spacing (µsec)**	**Pulse 2-to-3 Spacing (µsec)**	**Start Location Within Interval (msec)**
1	2	66.5	10	1005		612
2	2	77.1	10	1387		24
3	1	71.4	10			596
4	2	76.1	10	1775		60
5	3	52.8	10	1707	1300	45
6	3	88.6	10	1025	1531	77
7	2	69.7	10	1273		457
8	2	93.4	10	1105		378
9	2	57.4	10	1626		153
10	2	80.3	10	970		282
11	2	87.9	10	1769		48
12	1	55.6	10			484
13	2	93.8	10	1224		88
14	2	65.3	10	1677		616
15	3	52	10	1834	1548	106
16	2	77.2	10	1573		256
17	2	80.3	10	1480		90
18	2	86.3	10	1877		54
19	2	62.8	10	1277		90

Trial Number : 13						
Bursts in Trial: 20						
Burst	**Number of Pulses**	**Pulse Width (µsec)**	**Chirp Width (MHz)**	**Pulse 1-to-2 Spacing (µsec)**	**Pulse 2-to-3 Spacing (µsec)**	**Start Location Within Interval (msec)**
1	1	85.8	9			495
2	2	84.3	9	1766		169
3	2	71.9	9	1878		36
4	2	98	9	1532		147
5	2	72.7	9	991		225
6	2	99.5	9	1640		115
7	2	91.7	9	1348		122
8	3	73.6	9	1474	998	413
9	1	84.9	9			152
10	1	79.9	9			166
11	1	84.3	9			43
12	1	95.4	9			501
13	1	69.4	9			480
14	3	81.1	9	1792	1810	446
15	1	78.3	9			554
16	1	86.3	9			124
17	2	81.4	9	1612		300
18	1	99.5	9			428
19	2	100	9	1756		423
20	3	68.1	9	936	1204	189

Trial Number : 14						
Bursts in Trial: 8						
Burst	Number of Pulses	Pulse Width (µsec)	Chirp Width (MHz)	Pulse 1-to-2 Spacing (µsec)	Pulse 2-to-3 Spacing (µsec)	Start Location Within Interval (msec)
1	1	50.4	15			1265
2	2	89.2	15	1354		512
3	2	79.6	15	1222		1328
4	1	80.3	15			1402
5	3	93.8	15	1410	1065	1315
6	3	62.3	15	1592	1091	479
7	2	87.9	15	1775		602
8	2	76.3	15	1735		1124

Trial Number : 15						
Bursts in Trial: 9						
Burst	Number of Pulses	Pulse Width (µsec)	Chirp Width (MHz)	Pulse 1-to-2 Spacing (µsec)	Pulse 2-to-3 Spacing (µsec)	Start Location Within Interval (msec)
1	3	62.9	18	1777	1448	81
2	2	65.1	18	1167		221
3	2	95.7	18	1644		150
4	3	55.2	18	967	1635	1104
5	1	59.6	18			503
6	1	91	18			49
7	2	58.7	18	1197		1228
8	2	79.6	18	1197		125
9	3	55	18	1111	1194	387

Trial Number : 16						
Bursts in Trial: 10						
Burst	Number of Pulses	Pulse Width (µsec)	Chirp Width (MHz)	Pulse 1-to-2 Spacing (µsec)	Pulse 2-to-3 Spacing (µsec)	Start Location Within Interval (msec)
1	3	91.8	7	1510	1120	178
2	2	68.2	7	1897		1014
3	2	91.9	7	1437		1023
4	1	53.5	7			209
5	3	56.4	7	1643	1411	984
6	2	73	7	1648		583
7	3	66.3	7	1294	1513	663
8	1	53.7	7			1170
9	2	71.2	7	1183		977
10	2	81.9	7	948		259

Trial Number : 17						
Bursts in Trial: 11						
Burst	**Number of Pulses**	**Pulse Width (µsec)**	**Chirp Width (MHz)**	**Pulse 1-to-2 Spacing (µsec)**	**Pulse 2-to-3 Spacing (µsec)**	**Start Location Within Interval (msec)**
1	2	97	12	1484		331
2	2	61.9	12	1878		423
3	1	57.9	12			464
4	2	98.8	12	1730		784
5	2	85	12	1137		770
6	1	90	12			995
7	1	86.3	12			758
8	2	56.4	12	1333		214
9	1	52	12			217
10	2	58.8	12	1661		127
11	3	76.4	12	1419	1621	294

Trial Number : 18						
Bursts in Trial: 12						
Burst	**Number of Pulses**	**Pulse Width (µsec)**	**Chirp Width (MHz)**	**Pulse 1-to-2 Spacing (µsec)**	**Pulse 2-to-3 Spacing (µsec)**	**Start Location Within Interval (msec)**
1	3	56.5	19	1663	1799	190
2	2	58.8	19	1460		211
3	3	93	19	1452	937	471
4	2	95.8	19	1735		609
5	1	58.2	19			277
6	1	85.5	19			751
7	2	50.2	19	1757		6
8	3	70.5	19	1333	1446	862
9	1	94.7	19			247
10	1	75.9	19			804
11	3	83.5	19	1419	1821	990
12	2	62.1	19	1647		304

Trial Number : 19						
Bursts in Trial: 13						
Burst	**Number of Pulses**	**Pulse Width (µsec)**	**Chirp Width (MHz)**	**Pulse 1-to-2 Spacing (µsec)**	**Pulse 2-to-3 Spacing (µsec)**	**Start Location Within Interval (msec)**
1	3	67.2	16	1497	1639	901
2	3	88.5	16	1864	1330	406
3	3	75.3	16	1293	1022	863
4	2	98.5	16	1504		879
5	2	62.5	16	1613		685
6	2	81.2	16	1072		783
7	3	85.1	16	1027	1773	559
8	2	95.6	16	1008		588
9	3	55.2	16	1022	1203	41
10	2	65.4	16	1311		278
11	3	88.2	16	1789	1163	86
12	2	82.4	16	1872		66
13	1	53.1	16			704

Trial Number : 20						
Bursts in Trial: 14						
Burst	Number of Pulses	Pulse Width (µsec)	Chirp Width (MHz)	Pulse 1-to-2 Spacing (µsec)	Pulse 2-to-3 Spacing (µsec)	Start Location Within Interval (msec)
1	1	64.1	16			735
2	3	86	16	1389	1618	177
3	2	80.1	16	1480		412
4	3	84.2	16	1153	1353	705
5	2	96.5	16	991		768
6	2	78.5	16	1273		232
7	1	75.8	16			240
8	2	72.7	16	1366		628
9	2	99.3	16	1870		727
10	2	57.2	16	1237		814
11	3	62.7	16	1147	1836	44
12	3	68.9	16	1825	1164	214
13	3	65.9	16	1791	1484	798
14	3	58.7	16	1351	1084	532

Trial Number : 21						
Bursts in Trial: 15						
Burst	Number of Pulses	Pulse Width (µsec)	Chirp Width (MHz)	Pulse 1-to-2 Spacing (µsec)	Pulse 2-to-3 Spacing (µsec)	Start Location Within Interval (msec)
1	2	56	15	1304		660
2	2	52.2	15	977		557
3	3	88.7	15	1261	1716	330
4	2	80.5	15	1676		372
5	3	68.2	15	1248	1364	516
6	2	73.1	15	1565		455
7	1	82.4	15			424
8	2	53.1	15	1165		272
9	3	50.4	15	1022	1671	65
10	3	64.1	15	1756	1843	134
11	3	81.6	15	1778	1865	305
12	2	66.6	15	1309		188
13	3	66.6	15	1181	982	566
14	2	91.1	15	1604		705
15	2	74.2	15	1308		230

Trial Number : 22						
Bursts in Trial: 16						
Burst	Number of Pulses	Pulse Width (µsec)	Chirp Width (MHz)	Pulse 1-to-2 Spacing (µsec)	Pulse 2-to-3 Spacing (µsec)	Start Location Within Interval (msec)
1	2	53	20	1204		624
2	2	55.3	20	1345		254
3	2	90.2	20	1491		102
4	1	85.8	20			153
5	1	69.8	20			737
6	3	54.5	20	1363	1029	80
7	3	89.4	20	1372	1188	427
8	2	87.9	20	1251		496
9	2	71.9	20	1324		214
10	1	69	20			137
11	2	57.7	20	1262		539
12	2	82.6	20	1860		378
13	2	51.7	20	1132		714
14	3	99.6	20	1600	1805	298
15	2	57.4	20	1308		28
16	2	59.8	20	1437		448

Trial Number : 23						
Bursts in Trial: 17						
Burst	**Number of Pulses**	**Pulse Width (µsec)**	**Chirp Width (MHz)**	**Pulse 1-to-2 Spacing (µsec)**	**Pulse 2-to-3 Spacing (µsec)**	**Start Location Within Interval (msec)**
1	2	79	16	1296		240
2	1	59.4	16			447
3	2	53.7	16	1140		451
4	3	86.1	16	1759	1382	556
5	2	96.1	16	1605		93
6	2	61	16	1082		59
7	2	86.1	16	984		163
8	2	83.1	16	1655		645
9	3	82.9	16	1508	918	315
10	3	74.6	16	1554	1022	336
11	2	88.7	16	1290		623
12	2	66.1	16	1438		232
13	2	68.6	16	955		544
14	2	79.7	16	1908		271
15	2	76.3	16	969		553
16	3	77.4	16	1791	1708	69
17	2	60.8	16	1435		266

Trial Number : 24						
Bursts in Trial: 18						
Burst	**Number of Pulses**	**Pulse Width (µsec)**	**Chirp Width (MHz)**	**Pulse 1-to-2 Spacing (µsec)**	**Pulse 2-to-3 Spacing (µsec)**	**Start Location Within Interval (msec)**
1	1	57	8			294
2	1	67.5	8			409
3	2	55.8	8	1160		201
4	3	69.7	8	1282	934	410
5	3	77.5	8	1743	1060	349
6	2	94.2	8	1120		88
7	3	91.2	8	1512	1646	576
8	2	60.1	8	980		174
9	2	62.3	8	1881		448
10	1	72.8	8			64
11	3	60.2	8	1180	1750	443
12	2	91.2	8	1306		158
13	2	64.6	8	1506		580
14	1	67.7	8			73
15	2	81.2	8	1782		282
16	2	86.9	8	1497		532
17	2	60.3	8	1288		256
18	1	51.8	8			500

Trial Number : 25						
Bursts in Trial: 19						
Burst	**Number of Pulses**	**Pulse Width (µsec)**	**Chirp Width (MHz)**	**Pulse 1-to-2 Spacing (µsec)**	**Pulse 2-to-3 Spacing (µsec)**	**Start Location Within Interval (msec)**
1	1	92	7			316
2	2	77.1	7	1863		536
3	1	55.1	7			406
4	2	80.1	7	1413		338
5	3	81.4	7	1068	1061	99
6	3	51.7	7	1928	948	100
7	2	81.9	7	1749		447
8	1	87.2	7			461
9	3	89	7	1049	1347	261
10	1	98.8	7			368
11	2	84.5	7	1479		19
12	1	82.4	7			477
13	3	89	7	1137	1509	402
14	2	88.7	7	1058		573
15	2	97.5	7	1819		227
16	2	72.2	7	1282		509
17	2	65.9	7	1720		115
18	2	81	7	946		409
19	3	60.4	7	1239	1311	541

Trial Number : 26						
Bursts in Trial: 20						
Burst	**Number of Pulses**	**Pulse Width (µsec)**	**Chirp Width (MHz)**	**Pulse 1-to-2 Spacing (µsec)**	**Pulse 2-to-3 Spacing (µsec)**	**Start Location Within Interval (msec)**
1	2	60	13	1621		9
2	2	80.3	13	1015		102
3	3	51.7	13	1683	1669	292
4	2	83.2	13	1400		539
5	2	55.8	13	1010		552
6	3	84.9	13	1481	1341	170
7	2	95.3	13	1659		124
8	2	63.8	13	1019		304
9	3	70.4	13	1043	929	349
10	1	64.2	13			190
11	2	76.8	13	1557		522
12	1	87.9	13			189
13	3	83.5	13	1142	1344	400
14	2	69.4	13	1682		210
15	2	79.5	13	1353		542
16	1	69.2	13			547
17	2	94.1	13	1710		60
18	2	52.4	13	1435		77
19	1	75.5	13			19
20	1	93.8	13			301

Trial Number : 27						
Bursts in Trial: 12						
Burst	Number of Pulses	Pulse Width (µsec)	Chirp Width (MHz)	Pulse 1-to-2 Spacing (µsec)	Pulse 2-to-3 Spacing (µsec)	Start Location Within Interval (msec)
1	2	85.3	14	1168		964
2	2	57.7	14	1852		611
3	3	78.6	14	1041	1523	705
4	2	87.8	14	1659		943
5	3	73	14	1898	1157	187
6	3	95	14	1030	1043	133
7	3	89.6	14	1464	1472	86
8	2	62.6	14	1356		756
9	2	51.5	14	1933		804
10	2	97.4	14	1659		397
11	2	88.3	14	1196		61
12	3	51.3	14	1038	1183	974

Trial Number : 28						
Bursts in Trial: 13						
Burst	Number of Pulses	Pulse Width (µsec)	Chirp Width (MHz)	Pulse 1-to-2 Spacing (µsec)	Pulse 2-to-3 Spacing (µsec)	Start Location Within Interval (msec)
1	1	57	14			567
2	3	66.1	14	1142	1531	60
3	2	99.2	14	1733		383
4	2	71.8	14	1332		871
5	1	87.5	14			867
6	1	91.7	14			179
7	2	62.1	14	1199		52
8	3	62.4	14	1236	961	346
9	2	58.8	14	964		65
10	1	64.2	14			583
11	3	77.1	14	1676	1550	15
12	2	57.9	14	1657		252
13	2	65.3	14	1139		31

Trial Number : 29						
Bursts in Trial: 14						
Burst	Number of Pulses	Pulse Width (µsec)	Chirp Width (MHz)	Pulse 1-to-2 Spacing (µsec)	Pulse 2-to-3 Spacing (µsec)	Start Location Within Interval (msec)
1	2	79.2	7	1617		161
2	3	84.4	7	1335	1097	268
3	3	58.2	7	1178	1402	90
4	3	90.6	7	1685	1224	95
5	1	99	7			811
6	2	74.2	7	1161		418
7	3	80.7	7	1376	931	211
8	2	84.8	7	1754		309
9	2	86	7	1178		259
10	2	75.1	7	998		432
11	1	86.6	7			758
12	3	99.1	7	1235	1333	255
13	2	79.7	7	1314		468
14	2	90.7	7	1536		333

Trial Number : 30						
Bursts in Trial: 15						
Burst	**Number of Pulses**	**Pulse Width (µsec)**	**Chirp Width (MHz)**	**Pulse 1-to-2 Spacing (µsec)**	**Pulse 2-to-3 Spacing (µsec)**	**Start Location Within Interval (msec)**
1	2	72.3	19	1354		711
2	2	60.9	19	1460		465
3	3	81.2	19	1054	1916	229
4	1	52.1	19			396
5	1	87.8	19			480
6	3	58.7	19	1356	1344	479
7	1	78.3	19			360
8	3	90.4	19	1035	1213	118
9	3	50.1	19	1664	1065	341
10	1	93.1	19			713
11	2	76.4	19	1533		500
12	2	72.7	19	1210		340
13	3	78	19	1236	990	561
14	2	63.3	19	1177		166
15	2	86	19	1422		551

Pulse Type 6

Radar Type	Pulse Width (µsec)	PRI (µsec)	Pulses per Hop	Hopping Rate (kHz)	Hopping Sequence Length (msec)	Minimum Percentage of Successful Detection	Minimum Number of Trials
6	1	333	9	0.333	300	70%	30

5.4.5 TEST EQUIPMENT USED

- R&S TS8997

6 TEST EQUIPMENT

6.1 TEST EQUIPMENT HARDWARE

1 R&S TS8997
2.4 and 5 GHz Bands Conducted Test Lab

Ref.No.	Device Name	Description	Manufacturer	Serial Number	Last Calibration	Calibration Due
1.1	FSW43	Signal Analyser	Rohde & Schwarz GmbH & Co. KG	102013	2023-07	2025-07
1.2	SMBV100A	Vector Signal Generator 9 kHz - 6 GHz	Rohde & Schwarz	259291	2023-01	2026-01
1.3	OSP120	Contains Power Meter and Switching Unit OSP-B157W8 PLUS	Rohde & Schwarz	101158	2021-08	2024-08
1.4	CS-RUB6	Rubidium Frequency Standard	Rohde & Schwarz GmbH & Co. KG	100321		

The calibration interval is the time interval between “Last Calibration” and “Calibration Due”

6.2 TEST EQUIPMENT SOFTWARE

FSW43: FW 4.80SP1

SMBV100A: FW 4.15.125.49

OSP120: FW 2.10.0.23

7 ANTENNA FACTORS, CABLE LOSS AND SAMPLE CALCULATIONS

This chapter contains the antenna factors with their corresponding path loss of the used measurement path for all antennas as well as the insertion loss of the LISN.

7.1 LISN R&S ESH3-Z5 (150 KHZ – 30 MHZ)

Frequency		Corr.	LISN insertion loss ESH3-Z5	cable loss (incl. 10 dB atten-uator)
MHz		dB	dB	dB
0.15		10.1	0.1	10.0
5		10.3	0.1	10.2
7		10.5	0.2	10.3
10		10.5	0.2	10.3
12		10.7	0.3	10.4
14		10.7	0.3	10.4
16		10.8	0.4	10.4
18		10.9	0.4	10.5
20		10.9	0.4	10.5
22		11.1	0.5	10.6
24		11.1	0.5	10.6
26		11.2	0.5	10.7
28		11.2	0.5	10.7
30		11.3	0.5	10.8

Sample calculation

U_{LISN} (dB µV) = U (dB µV) + Corr. (dB)
U = Receiver reading
LISN Insertion loss = Voltage Division Factor of LISN
Corr. = sum of single correction factors of used LISN, cables, switch units (if used)
Linear interpolation will be used for frequencies in between the values in the table.

7.2 ANTENNA R&S HFH2-Z2 (9 KHZ – 30 MHZ)

Frequency	AF HFH-Z2)	Corr.	cable loss 1 (inside chamber)	cable loss 2 (outside chamber)	cable loss 3 (switch unit)	cable loss 4 (to receiver)	distance corr. (-40 dB/ decade)	d_{Limit} (meas. distance (limit)	d_{used} (meas. distance (used)
MHz	dB (1/m)	dB	dB	dB	dB	dB	dB	m	m
0.009	20.50	-79.6	0.1	0.1	0.1	0.1	-80	300	3
0.01	20.45	-79.6	0.1	0.1	0.1	0.1	-80	300	3
0.015	20.37	-79.6	0.1	0.1	0.1	0.1	-80	300	3
0.02	20.36	-79.6	0.1	0.1	0.1	0.1	-80	300	3
0.025	20.38	-79.6	0.1	0.1	0.1	0.1	-80	300	3
0.03	20.32	-79.6	0.1	0.1	0.1	0.1	-80	300	3
0.05	20.35	-79.6	0.1	0.1	0.1	0.1	-80	300	3
0.08	20.30	-79.6	0.1	0.1	0.1	0.1	-80	300	3
0.1	20.20	-79.6	0.1	0.1	0.1	0.1	-80	300	3
0.2	20.17	-79.6	0.1	0.1	0.1	0.1	-80	300	3
0.3	20.14	-79.6	0.1	0.1	0.1	0.1	-80	300	3
0.49	20.12	-79.6	0.1	0.1	0.1	0.1	-80	300	3
0.490001	20.12	-39.6	0.1	0.1	0.1	0.1	-40	30	3
0.5	20.11	-39.6	0.1	0.1	0.1	0.1	-40	30	3
0.8	20.10	-39.6	0.1	0.1	0.1	0.1	-40	30	3
1	20.09	-39.6	0.1	0.1	0.1	0.1	-40	30	3
2	20.08	-39.6	0.1	0.1	0.1	0.1	-40	30	3
3	20.06	-39.6	0.1	0.1	0.1	0.1	-40	30	3
4	20.05	-39.5	0.2	0.1	0.1	0.1	-40	30	3
5	20.05	-39.5	0.2	0.1	0.1	0.1	-40	30	3
6	20.02	-39.5	0.2	0.1	0.1	0.1	-40	30	3
8	19.95	-39.5	0.2	0.1	0.1	0.1	-40	30	3
10	19.83	-39.4	0.2	0.1	0.2	0.1	-40	30	3
12	19.71	-39.4	0.2	0.1	0.2	0.1	-40	30	3
14	19.54	-39.4	0.2	0.1	0.2	0.1	-40	30	3
16	19.53	-39.3	0.3	0.1	0.2	0.1	-40	30	3
18	19.50	-39.3	0.3	0.1	0.2	0.1	-40	30	3
20	19.57	-39.3	0.3	0.1	0.2	0.1	-40	30	3
22	19.61	-39.3	0.3	0.1	0.2	0.1	-40	30	3
24	19.61	-39.3	0.3	0.1	0.2	0.1	-40	30	3
26	19.54	-39.3	0.3	0.1	0.2	0.1	-40	30	3
28	19.46	-39.2	0.3	0.1	0.3	0.1	-40	30	3
30	19.73	-39.1	0.4	0.1	0.3	0.1	-40	30	3

Sample calculation

E (dB µV/m) = U (dB µV) + AF (dB 1/m) + Corr. (dB)
U = Receiver reading
AF = Antenna factor
Corr. = sum of single correction factors of used cables, switch unit, distance correction, amplifier (if applicable)
distance correction = -40 * LOG (d_{Limit}/ d_{used})
Linear interpolation will be used for frequencies in between the values in the table.
Table shows an extract of values

7.3 ANTENNA R&S HL562 (30 MHZ – 1 GHZ)

(d_{Limit} = 3 m)

Frequency	AF R&S HL562	Corr.	cable loss 1 (inside chamber)	cable loss 2 (outside chamber)	cable loss 3 (switch unit)	cable loss 4 (to receiver)	distance corr. (-20 dB/ decade)	d_{Limit} (meas. distance (limit)	d_{used} (meas. distance (used)
MHz	dB (1/m)	dB	dB	dB	dB	dB	dB	m	m
30	18.6	0.6	0.29	0.04	0.23	0.02	0.0	3	3
50	6.0	0.9	0.39	0.09	0.32	0.08	0.0	3	3
100	9.7	1.2	0.56	0.14	0.47	0.08	0.0	3	3
150	7.9	1.6	0.73	0.20	0.59	0.12	0.0	3	3
200	7.6	1.9	0.84	0.21	0.70	0.11	0.0	3	3
250	9.5	2.1	0.98	0.24	0.80	0.13	0.0	3	3
300	11.0	2.3	1.04	0.26	0.89	0.15	0.0	3	3
350	12.4	2.6	1.18	0.31	0.96	0.13	0.0	3	3
400	13.6	2.9	1.28	0.35	1.03	0.19	0.0	3	3
450	14.7	3.1	1.39	0.38	1.11	0.22	0.0	3	3
500	15.6	3.2	1.44	0.39	1.20	0.19	0.0	3	3
550	16.3	3.5	1.55	0.46	1.24	0.23	0.0	3	3
600	17.2	3.5	1.59	0.43	1.29	0.23	0.0	3	3
650	18.1	3.6	1.67	0.34	1.35	0.22	0.0	3	3
700	18.5	3.6	1.67	0.42	1.41	0.15	0.0	3	3
750	19.1	4.1	1.87	0.54	1.46	0.25	0.0	3	3
800	19.6	4.1	1.90	0.46	1.51	0.25	0.0	3	3
850	20.1	4.4	1.99	0.60	1.56	0.27	0.0	3	3
900	20.8	4.7	2.14	0.60	1.63	0.29	0.0	3	3
950	21.1	4.8	2.22	0.60	1.66	0.33	0.0	3	3
1000	21.6	4.9	2.23	0.61	1.71	0.30	0.0	3	3

(d_{Limit} = 10 m)

30	18.6	-9.9	0.29	0.04	0.23	0.02	-10.5	10	3
50	6.0	-9.6	0.39	0.09	0.32	0.08	-10.5	10	3
100	9.7	-9.2	0.56	0.14	0.47	0.08	-10.5	10	3
150	7.9	-8.8	0.73	0.20	0.59	0.12	-10.5	10	3
200	7.6	-8.6	0.84	0.21	0.70	0.11	-10.5	10	3
250	9.5	-8.3	0.98	0.24	0.80	0.13	-10.5	10	3
300	11.0	-8.1	1.04	0.26	0.89	0.15	-10.5	10	3
350	12.4	-7.9	1.18	0.31	0.96	0.13	-10.5	10	3
400	13.6	-7.6	1.28	0.35	1.03	0.19	-10.5	10	3
450	14.7	-7.4	1.39	0.38	1.11	0.22	-10.5	10	3
500	15.6	-7.2	1.44	0.39	1.20	0.19	-10.5	10	3
550	16.3	-7.0	1.55	0.46	1.24	0.23	-10.5	10	3
600	17.2	-6.9	1.59	0.43	1.29	0.23	-10.5	10	3
650	18.1	-6.9	1.67	0.34	1.35	0.22	-10.5	10	3
700	18.5	-6.8	1.67	0.42	1.41	0.15	-10.5	10	3
750	19.1	-6.3	1.87	0.54	1.46	0.25	-10.5	10	3
800	19.6	-6.3	1.90	0.46	1.51	0.25	-10.5	10	3
850	20.1	-6.0	1.99	0.60	1.56	0.27	-10.5	10	3
900	20.8	-5.8	2.14	0.60	1.63	0.29	-10.5	10	3
950	21.1	-5.6	2.22	0.60	1.66	0.33	-10.5	10	3
1000	21.6	-5.6	2.23	0.61	1.71	0.30	-10.5	10	3

Sample calculation

E (dB µV/m) = U (dB µV) + AF (dB 1/m) + Corr. (dB)
U = Receiver reading
AF = Antenna factor
Corr. = sum of single correction factors of used cables, switch unit, distance correction, amplifier (if applicable)
distance correction = -20 * LOG (d_{Limit}/ d_{used})
Linear interpolation will be used for frequencies in between the values in the table.
Tables show an extract of values.

7.4 ANTENNA R&S HF907 (1 GHZ – 18 GHZ)

Frequency	AF R&S HF907	Corr.	cable loss 1 (relay + cable inside chamber)	cable loss 2 (outside chamber)	cable loss 3 (switch unit, atten-uator & pre-amp)	cable loss 4 (to receiver)		
MHz	dB (1/m)	dB	dB	dB	dB	dB		
1000	24.4	-19.4	0.99	0.31	-21.51	0.79		
2000	28.5	-17.4	1.44	0.44	-20.63	1.38		
3000	31.0	-16.1	1.87	0.53	-19.85	1.33		
4000	33.1	-14.7	2.41	0.67	-19.13	1.31		
5000	34.4	-13.7	2.78	0.86	-18.71	1.40		
6000	34.7	-12.7	2.74	0.90	-17.83	1.47		
7000	35.6	-11.0	2.82	0.86	-16.19	1.46		

Frequency	AF R&S HF907	Corr.	cable loss 1 (relay inside chamber)	cable loss 2 (inside chamber)	cable loss 3 (outside chamber)	cable loss 4 (switch unit, atten-uator & pre-amp)	cable loss 5 (to receiver)	used for FCC 15.247
MHz	dB (1/m)	dB	dB	dB	dB	dB	dB	
3000	31.0	-23.4	0.47	1.87	0.53	-27.58	1.33	
4000	33.1	-23.3	0.56	2.41	0.67	-28.23	1.31	
5000	34.4	-21.7	0.61	2.78	0.86	-27.35	1.40	
6000	34.7	-21.2	0.58	2.74	0.90	-26.89	1.47	
7000	35.6	-19.8	0.66	2.82	0.86	-25.58	1.46	

Frequency	AF R&S HF907	Corr.	cable loss 1 (relay inside chamber)	cable loss 2 (High Pass)	cable loss 3 (pre-amp)	cable loss 4 (inside chamber)	cable loss 5 (outside chamber)	cable loss 6 (to receiver)
MHz	dB (1/m)	dB	dB	dB	dB	dB	dB	dB
7000	35.6	-57.3	0.56	1.28	-62.72	2.66	0.94	1.46
8000	36.3	-56.3	0.69	0.71	-61.49	2.84	1.00	1.53
9000	37.1	-55.3	0.68	0.65	-60.80	3.06	1.09	1.60
10000	37.5	-56.2	0.70	0.54	-61.91	3.28	1.20	1.67
11000	37.5	-55.3	0.80	0.61	-61.40	3.43	1.27	1.70
12000	37.6	-53.7	0.84	0.42	-59.70	3.53	1.26	1.73
13000	38.2	-53.5	0.83	0.44	-59.81	3.75	1.32	1.83
14000	39.9	-56.3	0.91	0.53	-63.03	3.91	1.40	1.77
15000	40.9	-54.1	0.98	0.54	-61.05	4.02	1.44	1.83
16000	41.3	-54.1	1.23	0.49	-61.51	4.17	1.51	1.85
17000	42.8	-54.4	1.36	0.76	-62.36	4.34	1.53	2.00
18000	44.2	-54.7	1.70	0.53	-62.88	4.41	1.55	1.91

Sample calculation

E (dB µV/m) = U (dB µV) + AF (dB 1/m) + Corr. (dB)
U = Receiver reading
AF = Antenna factor
Corr. = sum of single correction factors of used cables, switch unit, distance correction, amplifier (if applicable)
Linear interpolation will be used for frequencies in between the values in the table.
Tables show an extract of values.

7.5 ANTENNA EMCO 3160-09 (18 GHZ – 26.5 GHZ)

Frequency	AF EMCO 3160-09	Corr.	cable loss 1 (inside chamber)	cable loss 2 (pre-amp)	cable loss 3 (inside chamber)	cable loss 4 (switch unit)	cable loss 5 (to receiver)
MHz	dB (1/m)	dB	dB	dB	dB	dB	dB
18000	40.2	-23.5	0.72	-35.85	6.20	2.81	2.65
18500	40.2	-23.2	0.69	-35.71	6.46	2.76	2.59
19000	40.2	-22.0	0.76	-35.44	6.69	3.15	2.79
19500	40.3	-21.3	0.74	-35.07	7.04	3.11	2.91
20000	40.3	-20.3	0.72	-34.49	7.30	3.07	3.05
20500	40.3	-19.9	0.78	-34.46	7.48	3.12	3.15
21000	40.3	-19.1	0.87	-34.07	7.61	3.20	3.33
21500	40.3	-19.1	0.90	-33.96	7.47	3.28	3.19
22000	40.3	-18.7	0.89	-33.57	7.34	3.35	3.28
22500	40.4	-19.0	0.87	-33.66	7.06	3.75	2.94
23000	40.4	-19.5	0.88	-33.75	6.92	3.77	2.70
23500	40.4	-19.3	0.90	-33.35	6.99	3.52	2.66
24000	40.4	-19.8	0.88	-33.99	6.88	3.88	2.58
24500	40.4	-19.5	0.91	-33.89	7.01	3.93	2.51
25000	40.4	-19.3	0.88	-33.00	6.72	3.96	2.14
25500	40.5	-20.4	0.89	-34.07	6.90	3.66	2.22
26000	40.5	-21.3	0.86	-35.11	7.02	3.69	2.28
26500	40.5	-21.1	0.90	-35.20	7.15	3.91	2.36

Sample calculation

E (dB µV/m) = U (dB µV) + AF (dB 1/m) + Corr. (dB)
U = Receiver reading
AF = Antenna factor
Corr. = sum of single correction factors of used cables, switch unit, distance correction, amplifier (if applicable)
Linear interpolation will be used for frequencies in between the values in the table.
Table shows an extract of values.

7.6 ANTENNA EMCO 3160-10 (26.5 GHZ – 40 GHZ)

Frequency	AF EMCO 3160-10	Corr.	cable loss 1 (inside chamber)	cable loss 2 (outside chamber)	cable loss 3 (switch unit)	cable loss 4 (to receiver)	distance corr. (-20 dB/ decade)	d_{Limit} (meas. distance (limit)	d_{used} (meas. distance (used)
GHz	dB (1/m)	dB	dB	dB	dB	dB	dB	m	m
26.5	43.4	-11.2	4.4				-9.5	3	1.0
27.0	43.4	-11.2	4.4				-9.5	3	1.0
28.0	43.4	-11.1	4.5				-9.5	3	1.0
29.0	43.5	-11.0	4.6				-9.5	3	1.0
30.0	43.5	-10.9	4.7				-9.5	3	1.0
31.0	43.5	-10.8	4.7				-9.5	3	1.0
32.0	43.5	-10.7	4.8				-9.5	3	1.0
33.0	43.6	-10.7	4.9				-9.5	3	1.0
34.0	43.6	-10.6	5.0				-9.5	3	1.0
35.0	43.6	-10.5	5.1				-9.5	3	1.0
36.0	43.6	-10.4	5.1				-9.5	3	1.0
37.0	43.7	-10.3	5.2				-9.5	3	1.0
38.0	43.7	-10.2	5.3				-9.5	3	1.0
39.0	43.7	-10.2	5.4				-9.5	3	1.0
40.0	43.8	-10.1	5.5				-9.5	3	1.0

Sample calculation

E (dB µV/m) = U (dB µV) + AF (dB 1/m) + Corr. (dB)
U = Receiver reading
AF = Antenna factor
Corr. = sum of single correction factors of used cables, switch unit, distance correction, amplifier (if applicable)
Linear interpolation will be used for frequencies in between the values in the table.
distance correction = -20 * LOG (d_{Limit}/ d_{used})
Linear interpolation will be used for frequencies in between the values in the table.
Table shows an extract of values.

8 MEASUREMENT UNCERTAINTIES

Test Case	Parameter	Uncertainty
Radar Pulse Level	Power	± 2.2 dB
In Service Monitoring	Time	1.2 ms + 0.2 % of measured time 4 s (Non-Occ. Period)

The measurement uncertainties for all parameters are calculated with an expansion factor (coverage factor) k = 1.96. This means, that the true value is in the corresponding interval with a probability of 95 %.

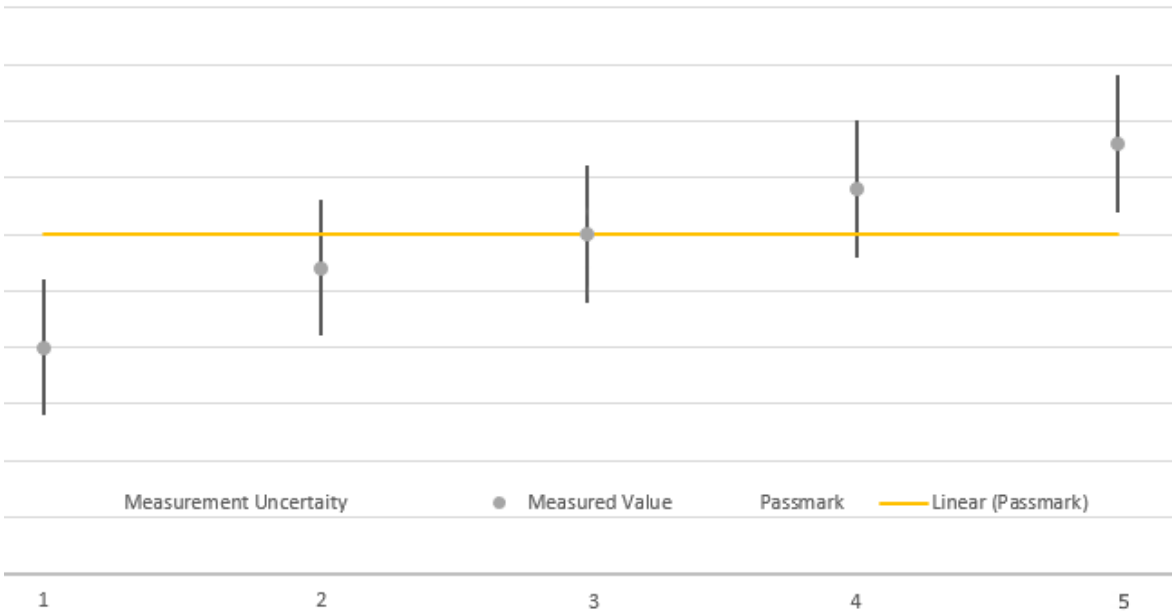

The verdicts in this test report are given according the above diagram:

Case	Measured Value	Uncertainty Range	Verdict
1	below pass mark	below pass mark	Passed
2	below pass mark	within pass mark	Passed
3	on pass mark	within pass mark	Passed
4	above pass mark	within pass mark	Failed
5	above pass mark	above pass mark	Failed

That means, the laboratory applies, as decision rule (see ISO/IEC 17025:2017), the so-called shared risk principle.

9 PHOTO REPORT

Please see separate photo report.

**********END OF TEST REPORT**********