Instruction Manual

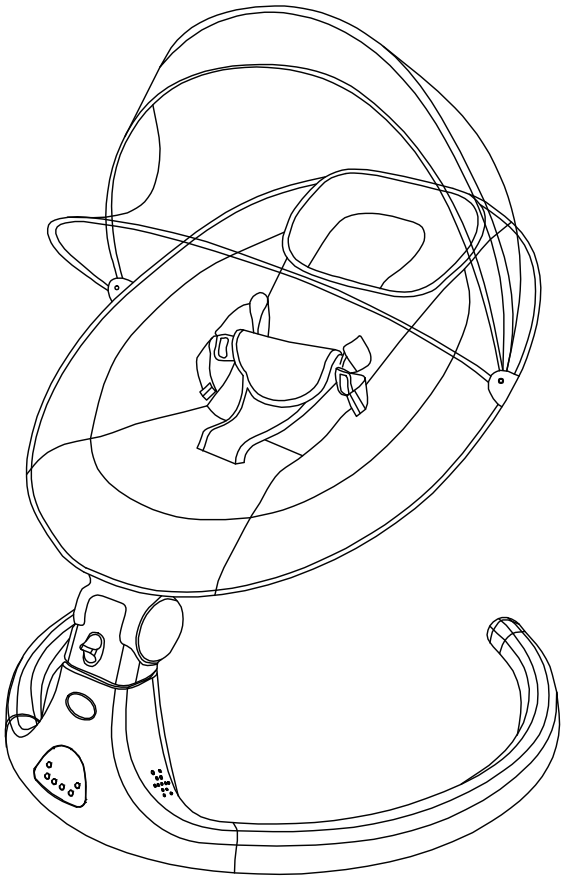

Before Installing and using, please follow the instructions carefully

INDEX

Component List 01
How to Assemble the Baby Rocker 01
Power Supply 04
Remote Control Instructions 05
Safety Instructions 06
Product Specifications 07
Cleaning and Washing 07

Component List

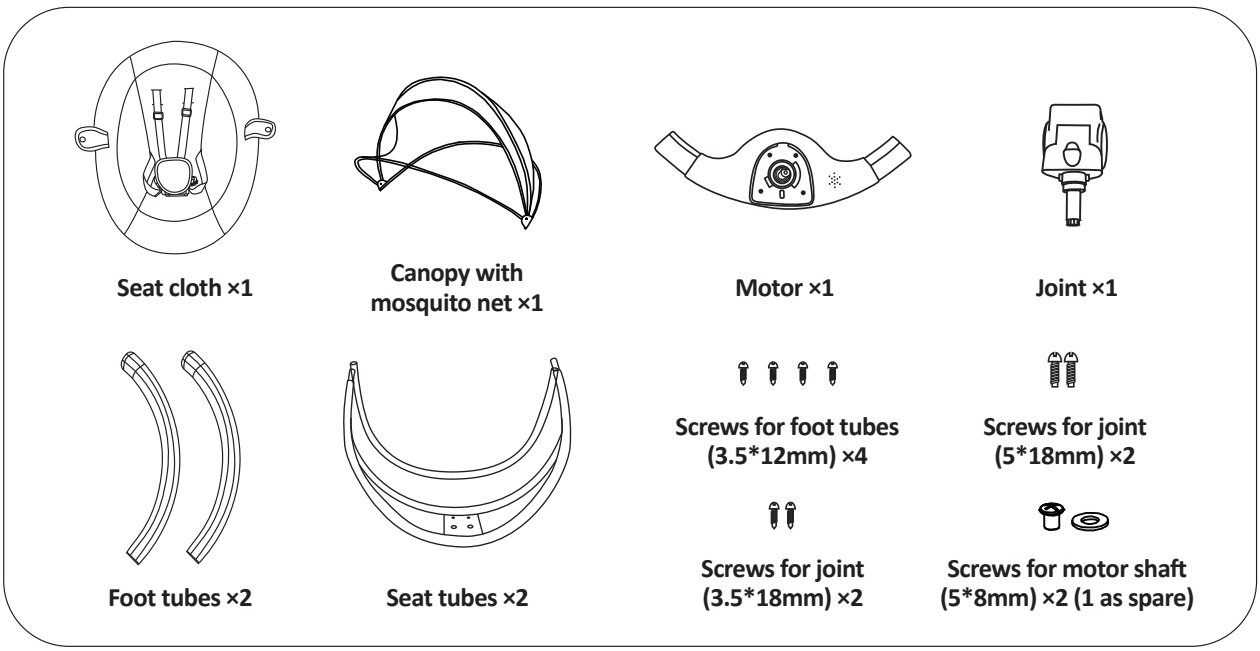

How to assemble the baby rocker

1. Assembly method (This should be done by an adult)

(1) Assemble the base

Please insert the plastics on both sides of the base into two foot tubes, and tighten the 4 screws (3.5*12mm) to 4 holes with the screwdriver

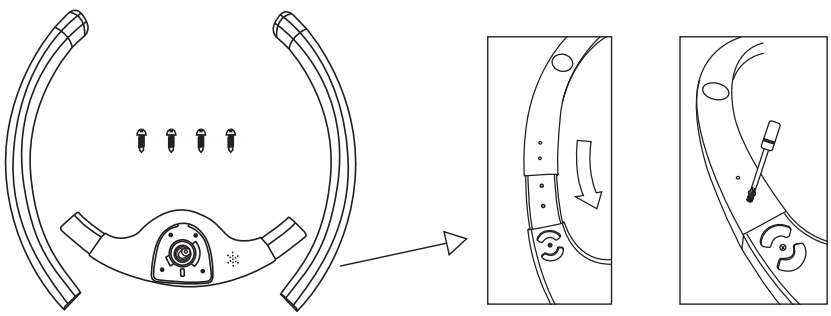

(2) Assemble the seat frame

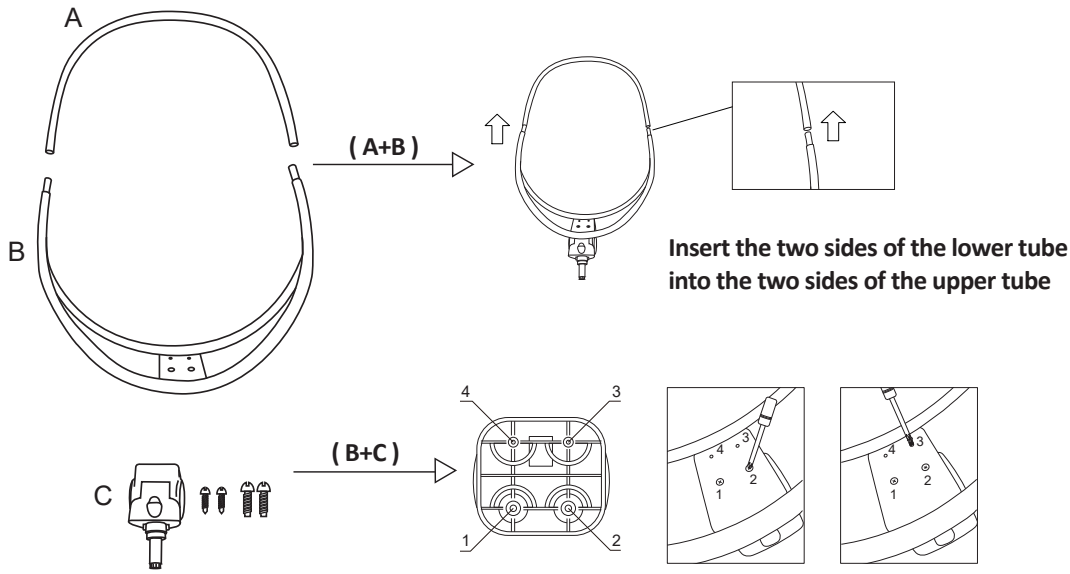

First tighten the two large screws (5*18mm) to the holes of number 1 and 2 with the screwdriver, and then tighten the two small screws (3.5*18mm) to the holes of number 3 and 4

(3) Connect the base and the seat frame

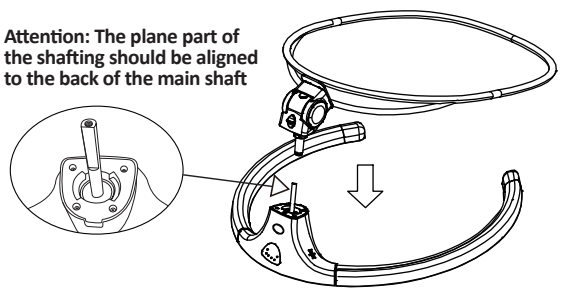

(4) Install the seat cover

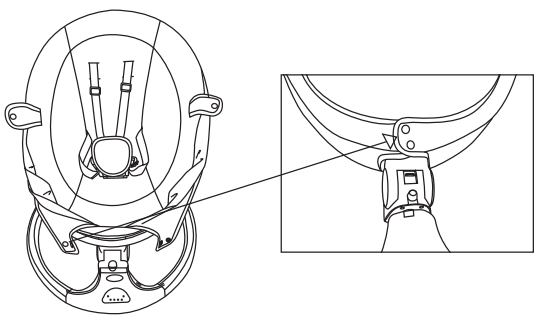

(5) Press the button at the back, then press two buttons of the joint and put it to the lowest position. Put the washer first, and then twist the screw (5*8mm) to parallel with the hole with the screwdriver

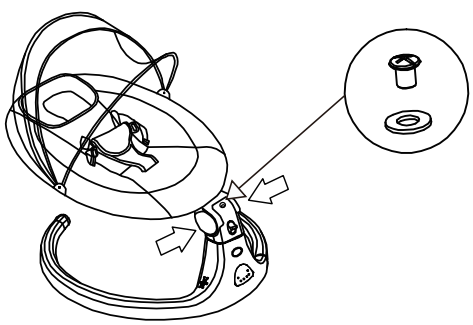

2. Angle adjustment (Adults hold the top of the seat pipe/tube with their hands when adjusting the gear)

(1) Half-lying position angle

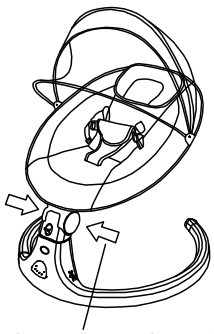

Press the button to adjust the angle

(2) Lying position angle. Warning: The weight of the third gear is 0-9 KGS, and cannot exceed the weight of 9KGS.

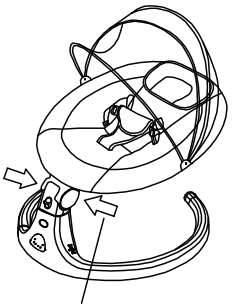

Press the button to adjust the angle

(3) Angle unlock and lock

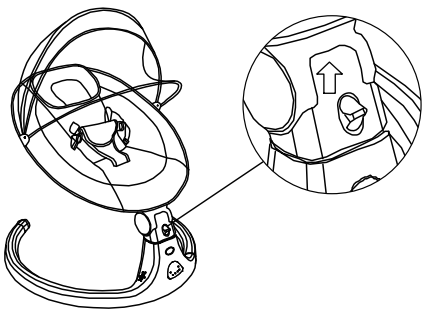

Push upward to unlock (can swing)

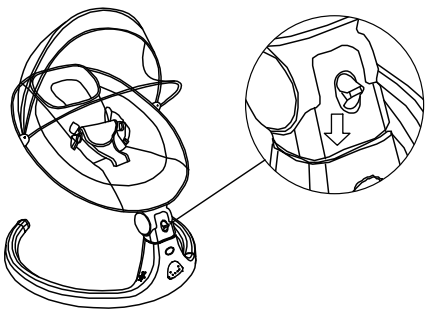

Push down to lock (can not swing)

3. Folding adjustment

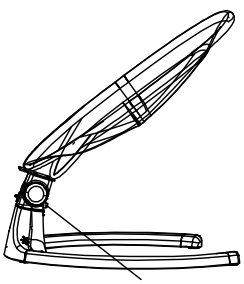

(1) Press the round button, then press the joint button to the lowest position

(2) After folding to the lowest angle, this product cannot be used

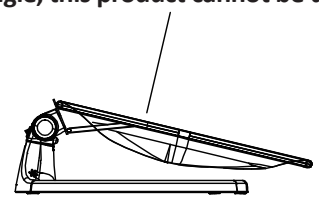

Power Supply

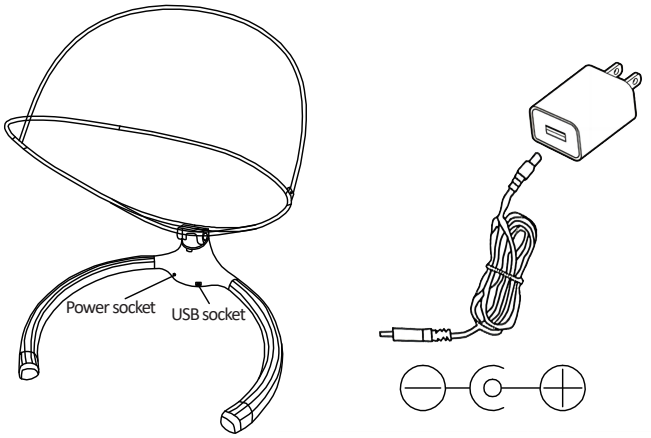

* **One:** The standard power supply is the 5mm adapter supplied with the product to supply power, the adapter input voltage is AC100-240V, 50/60Hz; the output voltage is DC 5V/1A

* **Two:** The power bank can be used for temporary power supply, but because the voltage is only 5V, there may be insufficient power, so long-term use is not recommended

Remote Control Instructions

Power on/off

Play/pause

VOL+ Volume up

Timer Timer setting

Previous song

VOL- Volume down

USB/Music USB/Music

Next song

SLEEP Sleep mode

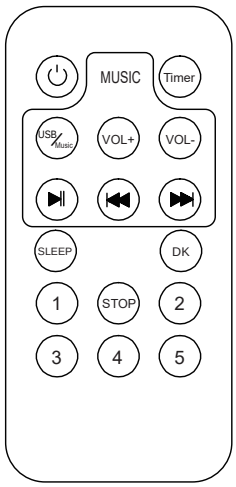

DK DK

STOP STOP

1 2 3 4 5 Five swing mode

Panel

Five swing mode

Timer button with three modes

Power on/off

Bluetooth

Music play and pause (short press)
Music switch button (long press for 2 seconds)
Volume control (long press for 3 seconds)

Touch sense swing

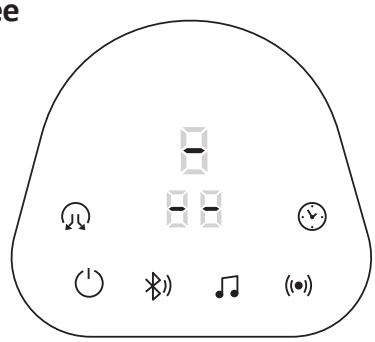

Bluetooth function：

Turn on the bluetooth in the mobile phone to search the name of swing chair, the product will play the music inside the mobile phone after connect this bluetooth device.

Safety Instructions

⚠ WARNING

1. Keep the seat belt on while using
2. Do not leave the child unattended
3. Applicable age: 0-12 months old
4. The maximum weight for this product is 9 KGS
5. DO NOT move or lift the product by the mosquito net
6. DO NOT move or lift the product when the child is in the seat
7. DO NOT hang other items from the the canopy except the supplied toys
8. DO NOT place the product at a high poston (table top, stairs or other high posltion from the ground) as it may fall and cause injury
9. It is dangerous to use this product on an elevated surface
10. DO NOT use the product on soft matter (sofa, bed) to avoid falling and cause suffocation
11. DO NOT use it for babies who can stand up independently to prevent hidden dangers such as being entangled in the seat belt or strangled!
12. This product is not classfied as toy
13. When the music player is connected, please make sure the volume is in a low voice initially
14. DO NOT use if any parts are missng or broken. Never substitute parts
15. Keep the product away from fire

Product Specifications

Product Name	Baby Swing Chair
Product mode	D008W
Input voltage	100-240V/50/60HZ 0.5A Max
Output voltage	5V/1A
Applicable age	0-12 Months 9KGS weight
Executlve standard	EN71-1 EN71-2 EN71-3
Production date	Marked on the body of the goods
Warning	Do not use the non-matching adapter

⚠Warning

(1) No short circuit of power terminals

(2) Keep the adaptor away from child while using

(3) Check the adaptor and accesories regularily and if you find any damage please stop using

Cleaning and Washing

Seat cushion: The seat cushion is removable and is washable. It Is recommended to wash by hand but not machine wash. After soaking in water and adding soft detergent, use clean water to clean it, then wring out the water and place flat out of direct sunlight to dry
Inner filler: fireproof hard resin cotton. Warning! Machine washing, bleaching and tumble drying are prohibited.

⚠ Warning

This device complies with Part 15 of the FCC Rules.?Operation is subject to the following two conditions: (1) this device may not cause harmful interference, and (2) this device must accept any interference received, including interference that may cause undesired operation.
Changes or modifications not expressly approved by the party responsible for compliance could void the user's authority to operate the equipment.
NOTE: This equipment has been tested and found to comply with the limits for a Class B digital device, pursuant to Part 15 of the FCC Rules.?These limits are designed to provide reasonable protection against harmful interference in a residential installation.?This equipment generates, uses and can radiate radio frequency energy and, if not installed and used in accordance with the instructions, may cause harmful interference to radio communications. However, there is no guarantee that interference will not occur in a particular installation.
If this equipment does cause harmful interference to radio or television reception which can be determined by turning the equipment off and on, the user is encouraged to try to correct the interference by one or more of the following measures:
--Reorient or relocate the receiving antenna.
-- Increase the separation between the equipment and receiver
--Connect the equipment into an outlet on a circuit different from that to which the receiver is connected.
--Consult the dealer or an experienced radio/TV technician for help
NOTE: This device and its antenna(s) must not be co-located or operation in conjunction with any other antenna or transmitter.

RF exposure:
The device has been evaluated to meet general RF exposure requirement.