RF MEASUREMENT REPORT

FCC ID:	2BKT7-ATRGNP4
Applicant:	Pontosense Inc.
Product:	Silver Shield
Model No.:	ATR_GN_P4
Brand Name:	Pontosense
FCC Classification:	Part 15 Field Disturbance Sensor (FDS)
FCC Rule Part(s):	FCC PART 15.255
Received Date:	2024-08-26
Test Date:	2024-10-16 ~ 2024-10-26

Reviewed By: Denise Zhou

Approved By: Robin Wu

ACCREDITED
TESTING LABORATORY
CERTIFICATE #3628.01

The test results relate only to the samples tested.

This equipment has been shown to be capable of compliance with the applicable technical standards as indicated in the measurement report and was tested in accordance with the measurement procedures specified in ANSI C63.10-2020. Test results reported herein relate only to the item(s) tested.

The test report shall not be reproduced except in full without the written approval of MRT Technology (Suzhou) Co., Ltd.

Revision History

Report No.	Version	Description	Issue Date	Note
2408RSU046-U6	V01	Initial Report	2024-10-29	Valid

CONTENTS

Description Page

1. General Information 5

1.1. Applicant 5

1.2. Manufacturer 5

1.3. Testing Facility 5

1.4. Product information 6

1.5. Radio Specification 6

2. Test Configuration 7

2.1. Test Mode 7

2.2. Test System Connection Diagram 7

2.3. Applied Standards 8

2.4. Test Environment Condition 8

3. Antenna Requirements 9

4. Group installation 10

5. Measuring Instrument 11

6. Decision Rules and Measurement Uncertainty 13

6.1. Decision Rules 13

6.2. Measurement Uncertainty 13

7. Test Result 14

7.1. Summary 14

7.2. 99% & 20dB Bandwidth 15

7.2.1. Test Limit 15

7.2.2. Test Procedure used 15

7.2.3. Test Setting 15

7.2.4. Test Setup 16

7.2.5. Test Result 16

7.3. EIRP 17

7.3.1. Test Limit 17

7.3.2. Test Procedure used 17

7.3.3. Test Setting 18

7.3.4. Test Setup 19

7.3.5. Test Results 19

7.4. Transmitter Spurious Emissions 20

7.4.1. Test Limit 20

7.4.2. Test Procedure used 20

7.4.3. Test Procedure 21

7.4.4. Test Setup 22

7.4.5. Test Result 24

7.5. Frequency Stability 25
7.5.1. Test Limit 25
7.5.2. Test Procedure used 25
7.5.3. Test Procedure 25
7.5.4. Test Setup 25
7.5.5. Test Result 25
7.6. AC Conducted Emissions Measurement 26
7.6.1. Test Limit 26
7.6.2. Test Setup 26
7.6.3. Test Result 26
Appendix A – Test Result 27
A.1 99% & 20dB Bandwidth Test Result 27
A.2 EIRP Test Result 28
A.3 Transmitter Spurious Emissions Test Result 29
A.4 Frequency Stability Test Result 32
A.5 AC Conducted Emissions Test Result 33
Appendix B – Test Setup Photograph 37
Appendix C – EUT Photograph 38

1. General Information

1.1. Applicant

Pontosense Inc.

30 Adelaide Street East, 12th Floor Toronto, Ontario M5C 3G8 Canada

1.2. Manufacturer

Pontosense Inc.

30 Adelaide Street East, 12th Floor Toronto, Ontario M5C 3G8 Canada

1.3. Testing Facility

☒	**Test Site – MRT Suzhou Laboratory**
	Laboratory Location (Suzhou - Wuzhong) D8 Building, No.2 Tian'edang Rd., Wuzhong Economic Development Zone, Suzhou, China **Laboratory Location (Suzhou - SIP)** 4b Building, Liando U Valley, No.200 Xingpu Rd., Shengpu Town, Suzhou Industrial Park, China **Laboratory Location (Suzhou - Wujiang)** Building 1, No.1 Xingdong Road, Wujiang, Suzhou, Jiangsu, People's Republic of China
	Laboratory Accreditations
	A2LA: 3628.01 CNAS: L10551 FCC: CN1166 ISED: CN0001 VCCI: ☐R-20025 ☐G-20034 ☐C-20020 ☐T-20020 ☐R-20141 ☐G-20134 ☐C-20103 ☐T-20104
☐	**Test Site – MRT Shenzhen Laboratory**
	Laboratory Location (Shenzhen) 1G, Building A, Junxiangda Building, Zhongshanyuan Road West, Nanshan District, Shenzhen, China
	Laboratory Accreditations
	A2LA: 3628.02 CNAS: L10551 FCC: CN1284 ISED: CN0105
☐	**Test Site – MRT Taiwan Laboratory**
	Laboratory Location (Taiwan) No. 38, Fuxing 2nd Rd., Guishan Dist., Taoyuan City 333, Taiwan (R.O.C.)
	Laboratory Accreditations
	TAF: 3261 FCC: 291082, TW3261 ISED: TW3261

1.4. Product information

Product Name	Silver Shield
Model No.	ATR_GN_P4
Brand Name	Pontosense
EUT Identification No.	20240909Sample#03 20240909Sample#01 (For 18~40GHz Transmitter Spurious Emissions testing)
Wi-Fi Specification	802.11b/g/n
Bluetooth Specification	Bluetooth 5.0 (BLE only)
Radar Specification	61GHz ~ 61.5GHz
Antenna Specification	Refer to Section 1.5
Power Type	By AC/DC Adapter
Operating Temperature	0 ~ 45 °C
Accessories	
AC/DC Adapter	Model No.: KA12C-0502000US Input Power: 100 - 240V ~ 50/60Hz, 0.35A Max Output Power: 5V, 2000mA
Remark: The information of EUT was provided by the manufacturer, and the accuracy of the information shall be the responsibility of the manufacturer.	

1.5. Radio Specification

Frequency Range	61GHz ~ 61.5GHz
Type of modulation	FMCW
Antenna Type	Embedded Antenna
Antenna Gain	5dBi

2. Test Configuration

2.1. Test Mode

Mode 1: Transmit at 61GHz ~ 61.5GHz

2.2. Test System Connection Diagram

The device was tested per the guidance ANSI C63.10: 2020 was used to reference the appropriate EUT setup for radiated emissions testing and AC line conducted testing.

Connection Diagram			
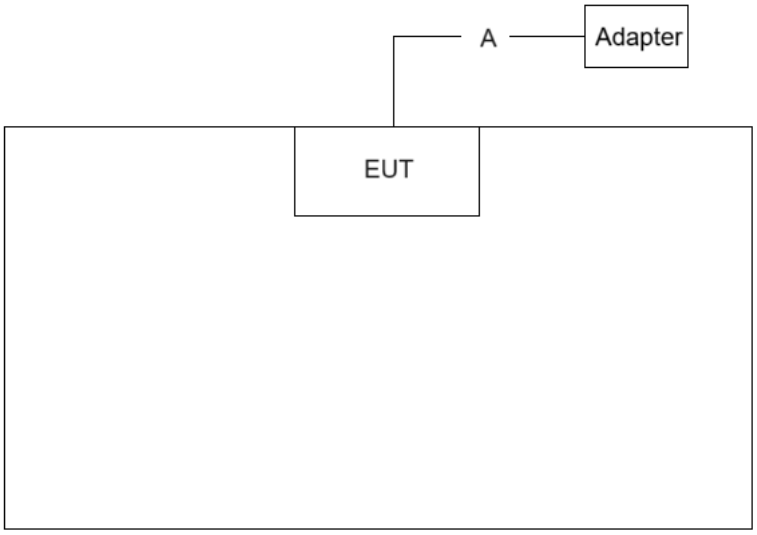			
Cable Type		Cable Description	Length
A	Power Cable	Non shielded	8.0m

2.3. Applied Standards

According to the specifications of the manufacturer, the EUT must comply with the requirements of the following standards:

- FCC Part 15.255
- KDB 364244 D01
- ANSI C63.10-2020

2.4. Test Environment Condition

Ambient Temperature	15 ~ 35°C
Relative Humidity	20 ~ 75%RH

3. Antenna Requirements

Excerpt from §15.203 of the FCC Rules/Regulations:

"An intentional radiator antenna shall be designed to ensure that no antenna other than that furnished by the responsible party can be used with the device. The use of a permanently attached antenna or of an antenna that uses a unique coupling to the intentional radiator shall be considered sufficient to comply with the provisions of this section."

- The antenna of this device is **permanently attached.**
- There are no provisions for connection to an external antenna.

Conclusion:

The unit complies with the requirement of §15.203.

4. Group installation

Excerpt from §15.255(a)&(h) of the FCC Rules/Regulations:

Operation under the provisions of this section is not permitted for equipment used on satellites.

Any transmitter that has received the necessary FCC equipment authorization under the rules of this chapter may be mounted in a group installation for simultaneous operation with one or more other transmitter(s) that have received the necessary FCC equipment authorization, without any additional equipment authorization. However, no transmitter operating under the provisions of this section may be equipped with external phase-locking inputs that permit beam-forming arrays to be realized.

- The device is not used on satellites.
- The device is not equipped with external phase-locking inputs that permit beam-forming arrays to be realized.

Conclusion:

The unit complies with the requirement of 15.255(a)&(h).

5. Measuring Instrument

Instrument	Manufacturer	Model No.	Asset No.	Cali. Interval	Cali. Due Date	Test Site
Anechoic Chamber	RIKEN	SIP-AC1	MRTSUE06554	1 year	2024-12-21	SIP-AC1
Horn Antenna	Schwarzbeck	BBHA 9170	MRTSUE06598	1 year	2024-11-04	SIP-AC1
Preamplifier	EMCI	EMC184045SE	MRTSUE06602	1 year	2025-10-08	SIP-AC1
Thermohygrometer	testo	608-H1	MRTSUE06616	1 year	2025-10-16	SIP-AC1
Signal Analyzer	Keysight	N9030B	MRTSUE06395	1 year	2025-06-21	SIP-AC1/SIP-AC2/ SIP-TR1/SIP-TR2
EMI Test Receiver	R&S	ESR3	MRTSUE06185	1 year	2024-12-17	SIP-AC2
Preamplifier	EMCI	EMC051845SE	MRTSUE06601	1 year	2024-11-02	SIP-AC2
Thermohygrometer	testo	608-H1	MRTSUE06622	1 year	2024-11-03	SIP-AC2
TRILOG Antenna	Schwarzbeck	VULB 9168	MRTSUE06647	1 year	2025-06-15	SIP-AC2
Horn Antenna	Schwarzbeck	BBHA 9120D	MRTSUE06648	1 year	2024-10-21	SIP-AC2
				1 year	2025-10-20	SIP-AC2
Anechoic Chamber	RIKEN	SIP-AC2	MRTSUE06781	1 year	2024-12-21	SIP-AC2
Loop Antenna	Schwarzbeck	FMZB 1519 B	MRTSUE06937	1 year	2025-01-27	SIP-AC2
Temperature Chamber	BAOYT	BYG-408CS	MRTSUE06847	1 year	2025-02-03	SIP-TR1
Thermohygrometer	testo	608-H1	MRTSUE11022	1 year	2024-10-28	SIP-TR1
V-band Low Noise Amplifier	Talent Microwave	TMLA-050075-3350-15	MRTSUE07226	1 year	2024-12-05	SIP-TR1/SIP-TR2
mmWave Antenna	A-INFO	LB-15-25-A	MRTSUE06409	N/A	N/A	SIP-TR1/SIP-TR2
Waveguide Harmonic Mixer	Keysight	M1970V	MRTSUE06271	3 years	2025-09-22	SIP-TR1/SIP-TR2
Signal Generator	Keysight	E8257D	MRTSUE06453	1 year	2025-05-08	SIP-TR2
USB Power Sensor	Keysight	U8489A	MRTSUE06448	5 years	2028-07-11	SIP-TR2
Oscilloscope	R&S	RTM3004	MRTSUE06882	1 year	2025-04-08	SIP-TR2
RF Detector	SAGE	STD-15SF-NI	MRTSUE06466	N/A	N/A	SIP-TR2
Waveguide Harmonic Mixer	Keysight	M1970W	MRTSUE06272	3 years	2025-09-29	SIP-TR2
mmWave Antenna	MI-WWAVE	261U-25/383	MRTSUE06273	N/A	N/A	SIP-TR2
mmWave Antenna	MI-WWAVE	261G/387	MRTSUE06274	N/A	N/A	SIP-TR2
mmWave Antenna	MI-WWAVE	261F/387	MRTSUE06275	N/A	N/A	SIP-TR2
mmWave Antenna	MI-WWAVE	261E-25/387	MRTSUE06276	N/A	N/A	SIP-TR2
mmWave Extension Module	Keysight	N9029AV05	MRTSUE06367	N/A	N/A	SIP-TR2
mmWave Extension Module	Keysight	N9029AV06	MRTSUE06368	N/A	N/A	SIP-TR2
mmWave Antenna	A-INFO	LB-10-25-A	MRTSUE06410	N/A	N/A	SIP-TR2
mmWave Extension Module	Keysight	E8257DV15	MRTSUE06456	5 years	2026-08-26	SIP-TR2
Thermohygrometer	testo	608-H1	MRTSUE11109	1 year	2025-03-05	SIP-TR2
Two-Line V-Network	R&S	ENV216	MRTSUE06003	1 year	2025-05-08	SIP-SR2

EMI Test Receiver	R&S	ESR3	MRTSUE06612	1 year	2025-05-08	SIP-SR2
Thermohygrometer	testo	608-H1	MRTSUE06621	1 year	2024-11-03	SIP-SR2
Shielding Room	MIX-BEP	SIP-SR2	MRTSUE06949	5 years	2029-10-13	SIP-SR2

Note 1: Standard gain horns need not be periodically calibrated. Antenna appearance and connector were checked and no damage.

Software	Version	Function
e3	230711	EMI Test Software
Controller_MF 7802BS	1.02	RE Antenna & turntable
MotorContor	V 2	mmw
BenchVue Power Meter	2019	Power

6. Decision Rules and Measurement Uncertainty

6.1. Decision Rules

The Decision Rule is based on Simple Acceptance in accordance with ISO Guide 98-4: 2012 Clause 8.2. (Measurement uncertainty is not taken into account when stating conformity with a specified requirement.)

6.2. Measurement Uncertainty

Where relevant, the following test uncertainty levels have been estimated for tests performed on the EUT as specified in CISPR 16-4-2. This uncertainty represents an expanded uncertainty expressed at approximately the 95% confidence level using a coverage factor of k = 2.

AC Conducted Emission Measurement
Measurement Uncertainty for a Level of Confidence of 95% (U=2Uc(y)): 9kHz~150kHz: 3.58dB 150kHz~30MHz: 3.20dB
Radiated Disturbance
Measurement Uncertainty for a Level of Confidence of 95% (U=2Uc(y)): Coaxial: 9kHz~30MHz: 2.59dB Coplanar: 9kHz~30MHz: 2.60dB Horizontal: 30MHz~200MHz: 3.85dB 200MHz~1GHz: 4.36dB 1GHz~40GHz: 4.98dB 40GHz~50GHz: 3.96dB 50GHz~75GHz: 4.01dB 75GHz~110GHz: 3.99dB 110GHz~140GHz: 4.11dB 140GHz~200GHz: 4.20dB Vertical: 30MHz~200MHz: 4.06dB 200MHz~1GHz: 5.28dB 1GHz~40GHz: 4.91dB 40GHz~50GHz: 3.86dB 50GHz~75GHz: 3.89dB 75GHz~110GHz: 3.87dB 110GHz~140GHz: 4.13dB 140GHz~200GHz: 4.24dB

7. Test Result

7.1. Summary

FCC Section(s)	Test Description	Test Condition	Verdict
15.215(c)	99% & 20dB Bandwidth	Radiated	Pass
15.255(c)(2)(v)	EIRP		Pass
15.255(d)	Transmitter Spurious Emissions		Pass
15.255(f)	Frequency stability		Pass
15.207	AC Conducted Emissions 150kHz - 30MHz	Line Conducted	Pass

Note: The radiation measurements are performed in X, Y, Z axis positioning. Only the worst case data is shown in the report.

7.2. 99% & 20dB Bandwidth

7.2.1. Test Limit

Within 61~61.5GHz

7.2.2. Test Procedure used

ANSI C63.10-2020 Section 9.3 & 9.4

7.2.3. Test Setting

99% Bandwidth

1. Span equal to approximately 1.5 times the OBW, centered on the carrier frequency
2. Set RBW = 1% ~ 5% of the OBW, or a minimum of 1 MHz if this is not possible due to a large OBW
3. VBW ≥ 3 × RBW
4. Detector = Peak
5. Trace mode = max hold
6. Sweep = auto couple
7. Allow the trace to stabilize and marker the highest level
8. Using 99% power bandwidth function of the instrument and report the measured bandwidth

20dB Bandwidth

1. Set the spectrum span range to overlap the nominal center frequency
2. Set RBW = 1% ~ 5% of the OBW
3. VBW ≥ 3 × RBW
4. Detector = Peak
5. Trace mode = max hold
6. Sweep = auto couple
7. Allow the trace to stabilize and marker the highest level
8. Use Occupied BW function to determine two frequencies, one at the lowest frequency and the other at the highest frequency

7.2.4. Test Setup

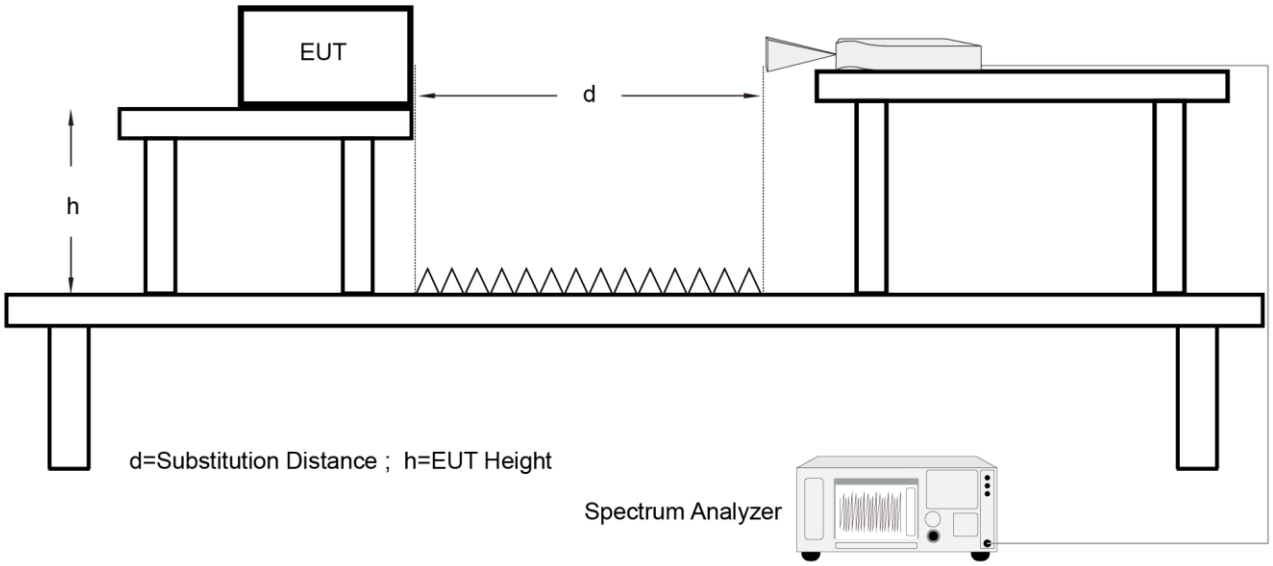

7.2.5. Test Result

Refer to Appendix A.1.

7.3. EIRP

7.3.1. Test Limit

According to FCC §15.255 (c)(2)(v), for field disturbance sensors/radars that occupy 500 MHz bandwidth or less that are contained wholly within the frequency band 61.0 ~ 61.5 GHz, the average power of any emission, measured during the transmit interval, shall not exceed 40 dBm, and the peak power of any emission shall not exceed 43 dBm. In addition, the average power of any emission outside of the 61.0 ~ 61.5 GHz band, measured during the transmit interval, but still within the 57 ~ 71 GHz band, shall not exceed 10 dBm, and the peak power of any emission shall not exceed 13 dBm.

7.3.2. Test Procedure used

ANSI C63.10-2020 Section 9.9

Note: Far-field boundary calculation as below.

According to ANSI C63.10-2020, Clause 9.1.4, All measurements shall be made in the far-field of the measurement antenna. The far-field boundary for mm-wave antennas is $2D^2/\lambda$.

- For spurious and harmonic emissions testing, D is the largest antenna dimension of the measurement antenna in m;

  For fundamental or out-of-band emissions, D is the largest antenna dimension of the EUT antenna or measurement antenna, whichever is largest.
- λ is the wavelength in m.

Far-field boundary calculation			
Frequency Range (GHz)	λ (m)	D (m)	$R_{(Far\ Field)}$ (m)
24.00 ~ 24.25	0.012	0.096	1.536
40.00 ~ 50.00	0.006	0.046	0.705
50.00 ~ 75.00	0.004	0.036	0.648
75.00 ~ 110.00	0.0027	0.026	0.501
110.00 ~ 140.00	0.0021	0.020	0.381
140.00 ~ 220.00	0.0014	0.014	0.280

For 24.00 ~ 24.25GHz, Our measurement is performed at a minimum distance of 3.0m > $R_{(Far\ Field)}$.

For 40.00 ~ 220.00GHz (except EIRP item), Our measurement is performed at a minimum distance of 0.75m > $R_{(Far\ Field)}$.

For EIRP item, Our measurement is performed at a minimum distance of 0.85m > $R_{(Far\ Field)}$.

7.3.3. Test Setting

For EIRP measurement

1. Connect the test antenna for the fundamental frequency band to the mm-wave RF detector. Place the test horn in the main beam of the EUT at 0.85m. Connect the video output of the detector to the 50Ω input of a DSO. Set the sampling rate of the DSO to at least twice the cutoff frequency of any LPF used or to at least twice the signal bandwidth without a LPF. Adjust the memory depth, the triggering, and the sweep speed to obtain a display that is representative of the signal considering the type of modulation.
2. Record the peak voltage from the DSO and record the average voltage during the ON time of the EUT from the DSO.
3. Disconnect the measurement antenna or EUT from the RF input port of the instrumentation system.
4. Connect a mm-wave source to the RF input port of the instrumentation system via a waveguide variable attenuator. The mm-wave source shall be unmodulated.
5. Adjust the frequency of the mm-wave source to the center of the frequency range occupied by the transmitter. Adjust the amplitude of the mm-wave source such that the DSO indicates a voltage equal to the peak voltage recorded in step 2.
6. Disconnect the waveguide variable attenuator from the RF input port of the instrumentation system. Without changing any settings, connect the waveguide variable attenuator to a wideband mm-wave power meter with a thermocouple detector or equivalent. Measure and note the power.
7. Repeat step 4 to step 6 for the average voltage recorded in step 2.

Calculate the peak and average EIRP from the peak and average (respectively) substitution power at the output of the measurement antenna using following Equation

$$EIRP = 21.98 – 20\log(\lambda) + 20\log(D_ref) + P - G$$

Where

EIRP	is the equivalent isotropic radiated power, in dBm
D_ref	is the measurement distance, in m
λ	is the wavelength of the emission under investigation [300/f(MHz)], in m
P	is the power measured at the output of the measurement antenna, in dBm
G	is the gain of the measurement antenna, in dBi

7.3.4. Test Setup

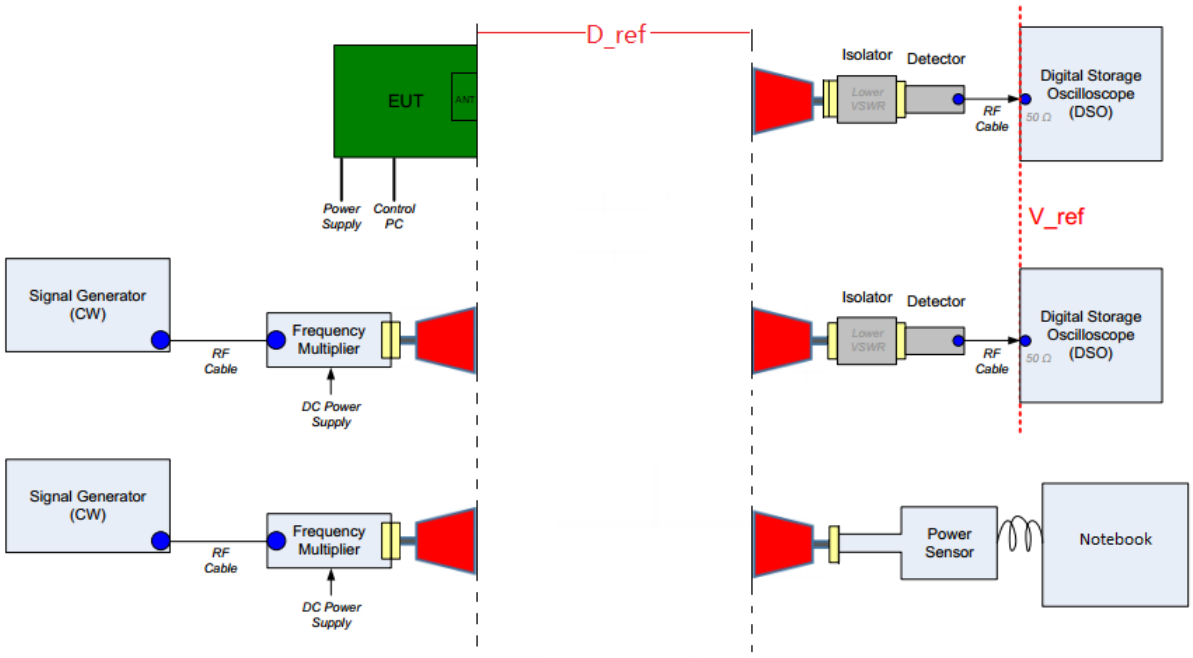

7.3.5. Test Results

Refer to Appendix A.2.

7.4. Transmitter Spurious Emissions

7.4.1. Test Limit

According to FCC §15.255 (d), limits on spurious emissions:

1. The power density of any emissions outside the 57-71 GHz band shall consist solely of spurious emissions.

2. Radiated emissions below 40 GHz shall not exceed the general limits in §15.209.

3. Between 40 GHz and 200 GHz, the level of these emissions shall not exceed 90pW/cm^2 at a distance of 3 meters.

4. The levels of the spurious emissions shall not exceed the level of the fundamental emission.

FCC Part 15.209 Limit		
Frequency (MHz)	Field Strength (μV/m)	Measurement Distance (m)
0.009 ~ 0.490	2400/F(kHz)	300
0.490 ~ 1.705	24000/F(kHz)	30
1.705 ~ 30.0	30	30
30 ~ 80	100**	3
80 ~ 216	150**	3
216 ~ 960	200**	3
Above 960	500	3
Note 1: The lower limit shall apply at the transition frequency. Note 2: Distance refers to the distance in meters between the measuring instrument antenna and the closed point of any part of the device or system. Note 3: E field strength (dBμV/m) = 20 log E field strength (μV/m).		

7.4.2. Test Procedure used

ANSI C63.10-2020 Section 9.10~ 9.11 and Section 6.3 ~ 6.6

7.4.3. Test Procedure

Measurement of harmonic and spurious emissions above 40 GHz

1. Connect the test antenna covering the appropriate frequency range to a spectrum analyzer via an external mixer.
2. Set spectrum analyzer RBW = 1MHz, VBW = 3MHz, average detector.
3. Maximize all observed emissions. Note the maximum power indicated on the spectrum analyzer. Adjust this reading, if necessary, by the conversion loss of the external mixer used at the frequency under investigation and the external mixer IF cable loss.
4. Calculate the maximum field strength of the emission at the measurement distance
5. Calculate the power density at the distance specified by the limit from the field strength at the distance specified by the limit
6. Repeat the preceding sequence for every emission observed in the frequency band under investigation.

Measurement of harmonic and spurious emissions below 1 GHz

1. Analyzer center frequency was set to the frequency of the radiated spurious emission of interest
2. Span was set greater than 1MHz
3. RBW = as specified in Table 1
4. Detector = CISPR quasi-peak
5. Sweep time = auto couple
6. Trace was allowed to stabilize

Table 1 - RBW as a function of frequency

Frequency	RBW
9 ~ 150 kHz	200 ~ 300 Hz
0.15 ~ 30 MHz	9 ~ 10 kHz
30 ~ 1000 MHz	100 ~ 120 kHz
> 1000 MHz	1 MHz

Measurement of harmonic and spurious emissions between 1GHz to 40 GHz

1. Analyzer center frequency was set to the frequency of the radiated spurious emission of interest
2. RBW = 1MHz
3. VBW = 3MHz
4. Detector = peak
5. Sweep time = auto couple
6. Trace mode = max hold
7. Trace was allowed to stabilize

Average Field Strength Measurements

1. Analyzer center frequency was set to the frequency of the radiated spurious emission of interest
2. RBW = 1MHz
3. VBW = 3 x RBW
4. Detector = Average
5. Sweep time = auto
6. Trace mode = Average

7.4.4. Test Setup

Below 30MHz Test Setup:

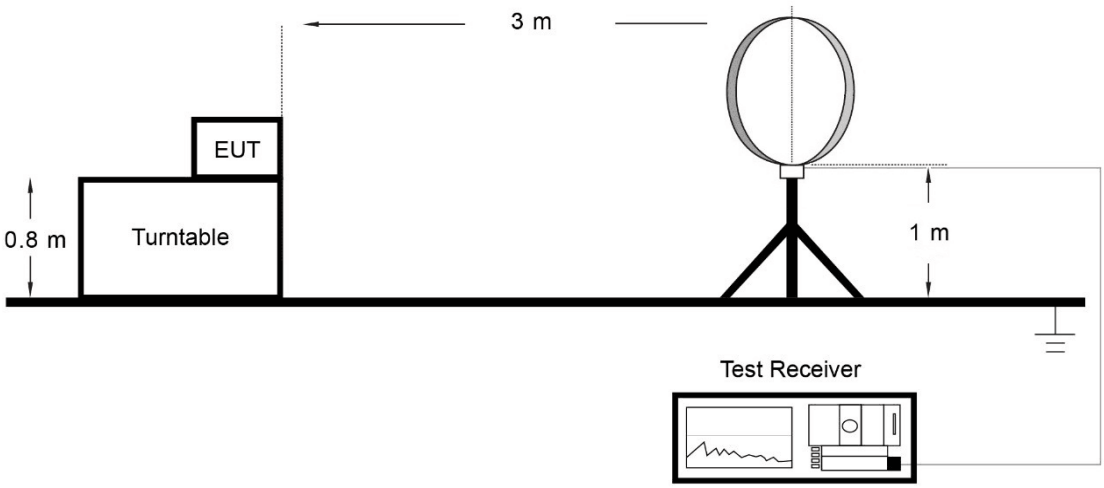

Below 1GHz Test Setup:

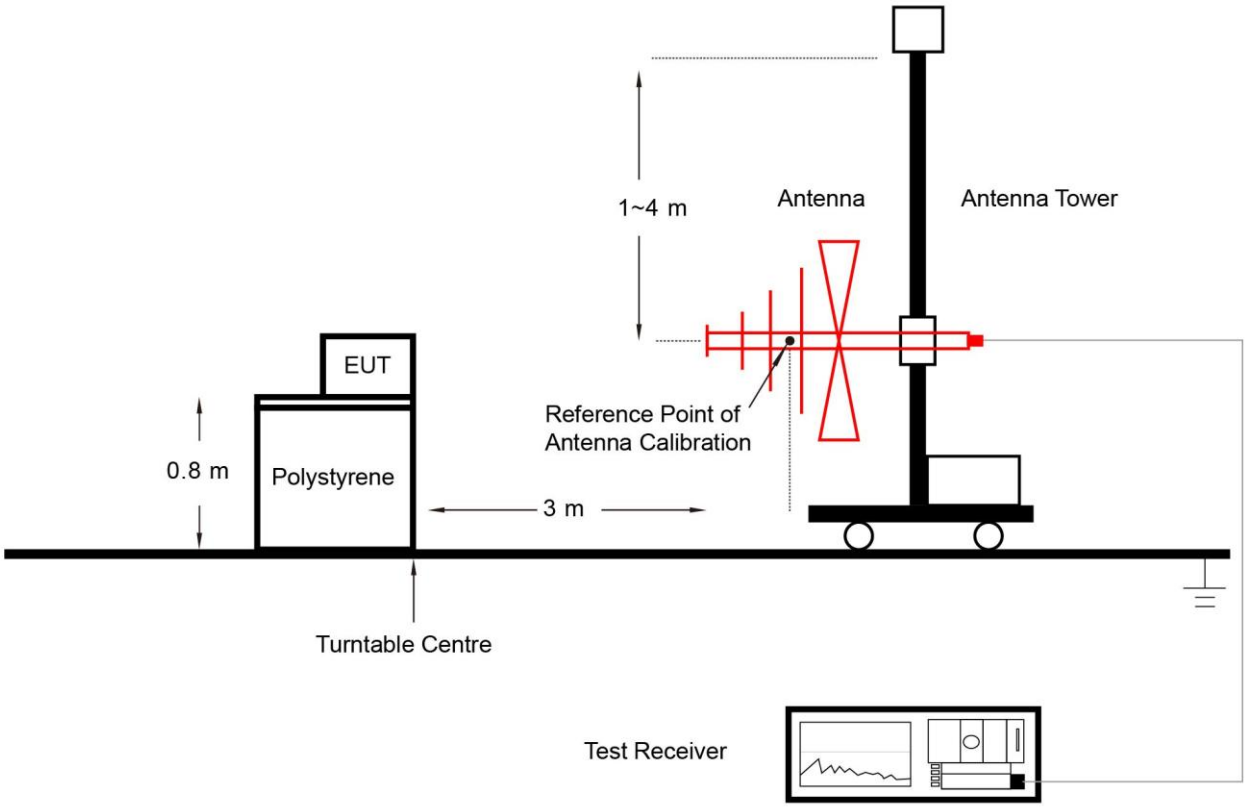

1GHz ~ 40GHz Test Setup:

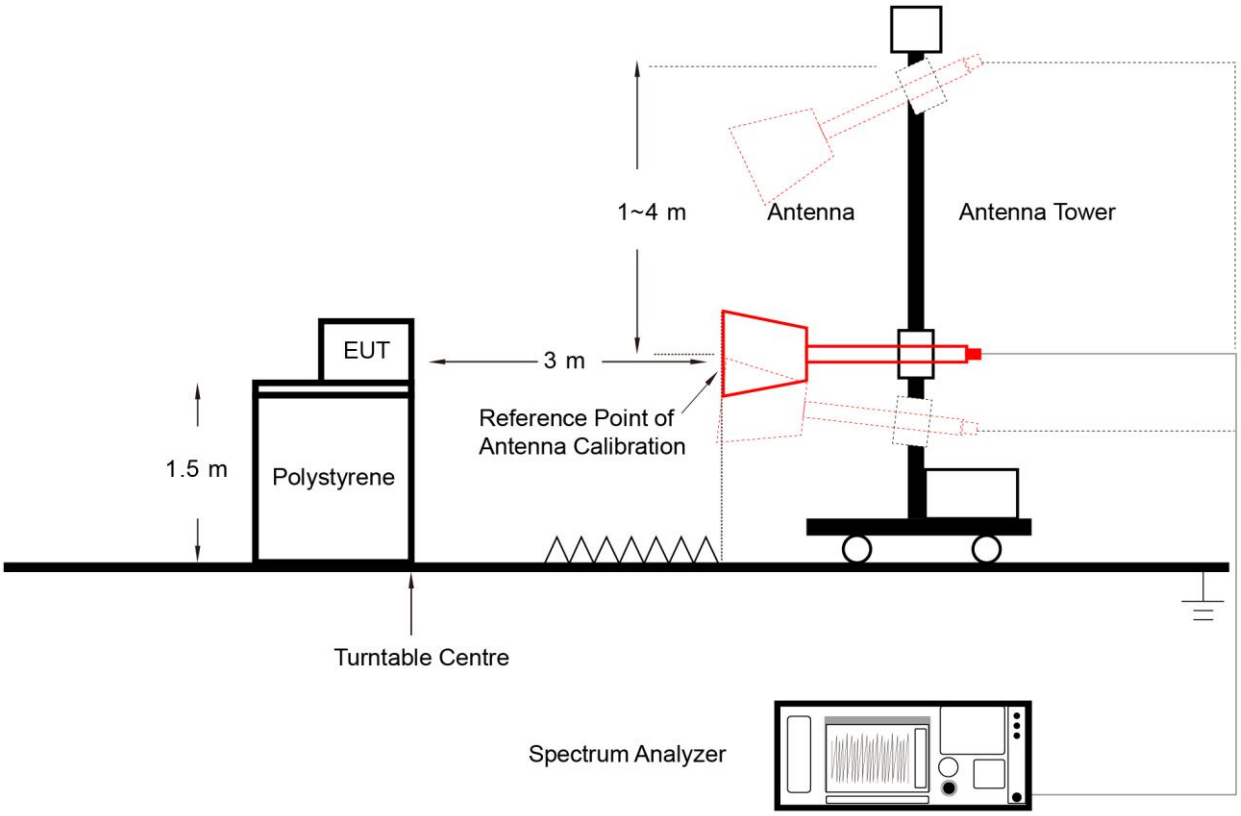

40GHz ~ 50GHz Test Setup:

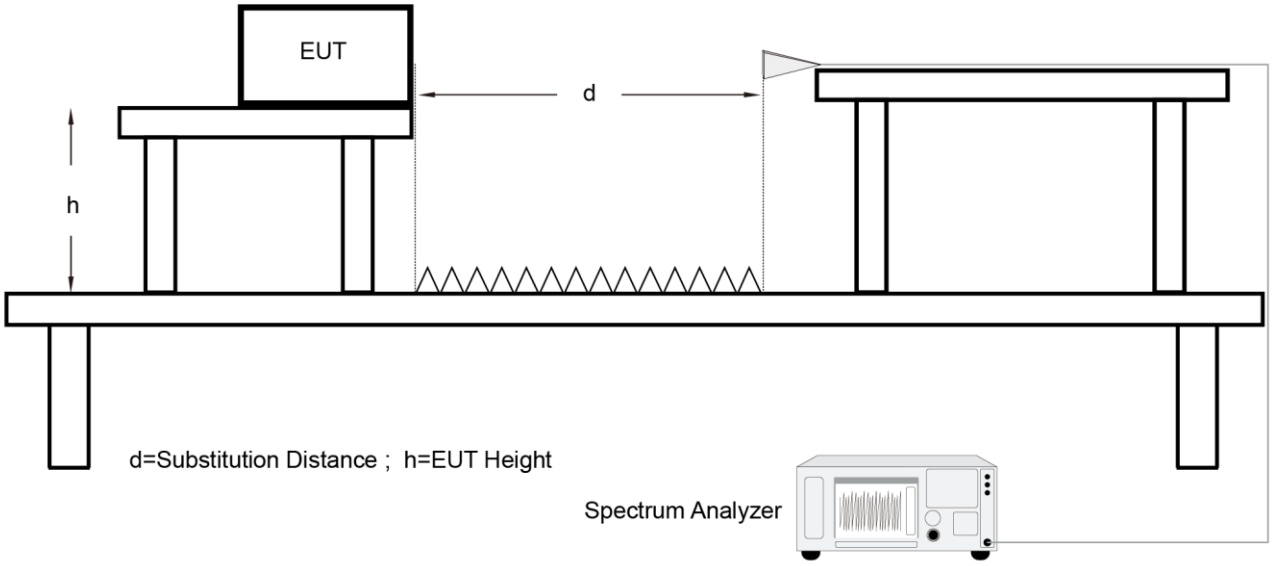

Above 50GHz Test Setup:

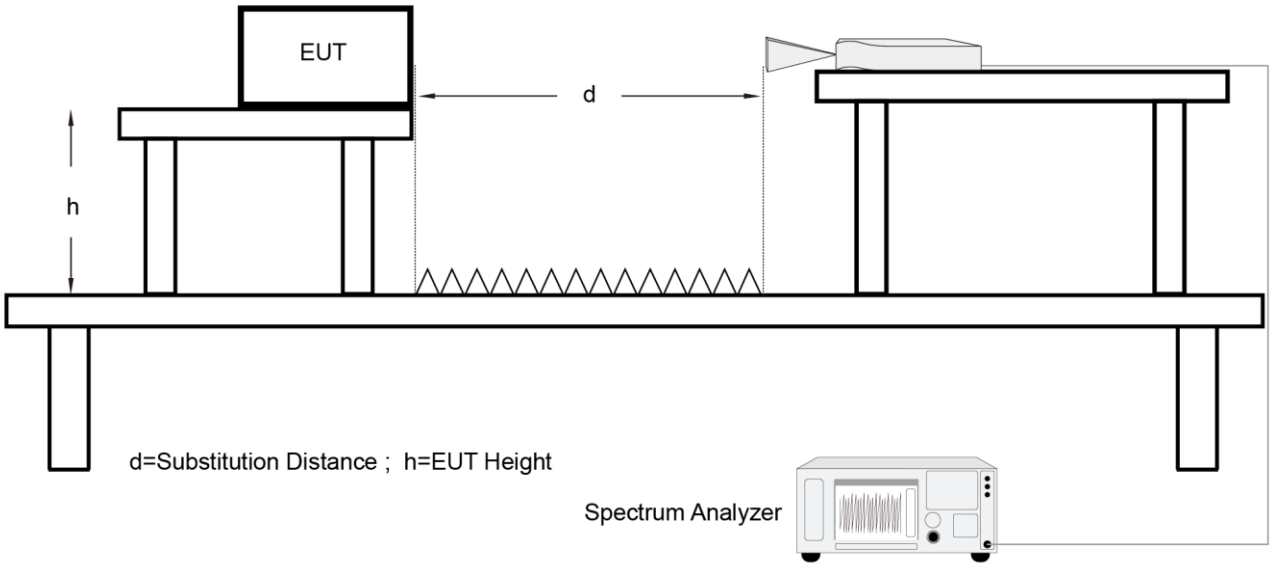

7.4.5. Test Result

Refer to Appendix A.3.

7.5. Frequency Stability

7.5.1. Test Limit

According to FCC §15.255 (f), fundamental emissions must be contained within the frequency bands 61 – 61.5GHz during all conditions of operation. Equipment is presumed to operate over the temperature range -20 to +50 degrees Celsius with an input voltage variation of 85% to 115% of rated input voltage, unless justification is presented to demonstrate otherwise.

7.5.2. Test Procedure used

ANSI C63.10-2020 Section 9.5

7.5.3. Test Procedure

1. Arrange EUT and test equipment according to Section 7.5.4.
2. With the EUT at ambient temperature and voltage source set to the EUT nominal operating voltage (100%), record the spectrum mask of the EUT emission on the spectrum analyzer.
3. Vary EUT power supply between 85% and 115% of nominal and record the frequency excursion of the EUT emission mask.
4. Set the power supply to 100% nominal setting, and raise EUT operating temperature to 50 °C.
5. Record the frequency excursion of the EUT emission mask.
6. Repeat step 5 at each 10°C increment down to -20 °C.

7.5.4. Test Setup

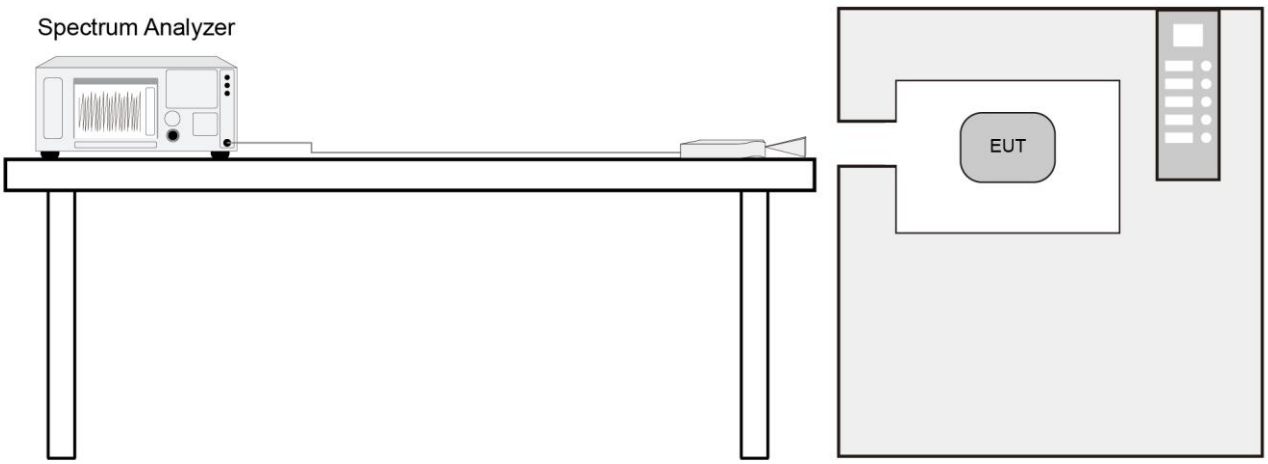

7.5.5. Test Result

Refer to Appendix A.4.

7.6. AC Conducted Emissions Measurement

7.6.1. Test Limit

FCC 15.207 Limits		
Frequency (MHz)	QP (dBuV)	Average (dBuV)
0.15 ~ 0.50	66 ~ 56	56 ~ 46
0.50 ~ 5.0	56	46
5.0 ~ 30	60	50
Note 1: The lower limit shall apply at the transition frequencies. Note 2: The limit decreases linearly with the logarithm of the frequency in the range 0.15MHz to 0.5MHz.		

7.6.2. Test Setup

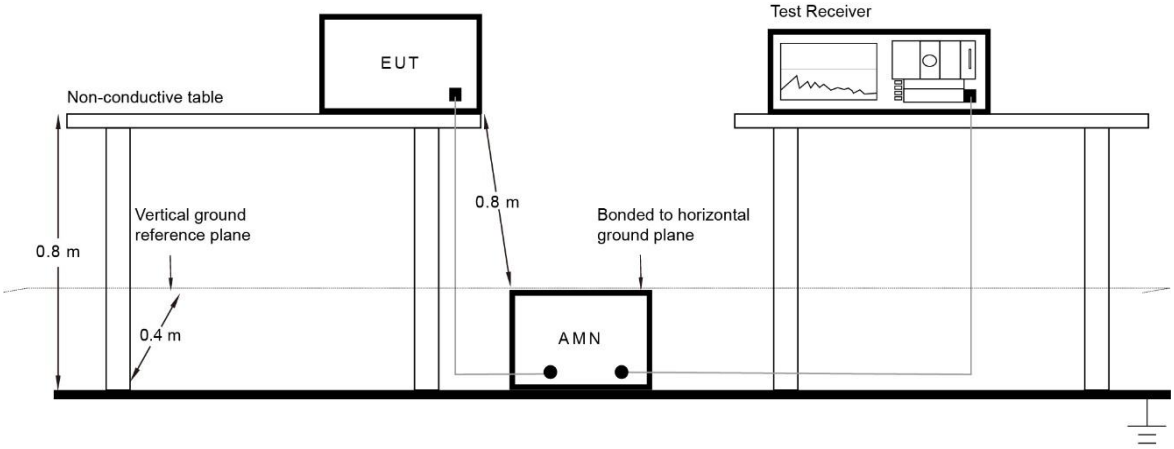

7.6.3. Test Result

Refer to Appendix A.5.

Appendix A – Test Result

A.1 99% & 20dB Bandwidth Test Result

Test Site	SIP-TR2	Test Engineer	Alisa Deng
Test Date	2024-10-26		

Frequency Range (GHz)	Modulation Type	99% Bandwidth (MHz)	F_L (MHz)	F_H (MHz)	Limit (MHz)	Result
61 ~ 61.5	FMCW	468.66	61020.24	61488.90	61000 ~ 61500	Pass

Frequency Range (GHz)	Modulation Type	20dB Bandwidth (MHz)	F_L (MHz)	F_H (MHz)	Limit (MHz)	Result
61 ~ 61.5	FMCW	492.11	61007.86	61499.97	61000 ~ 61500	Pass

99% & 20dB Bandwidth

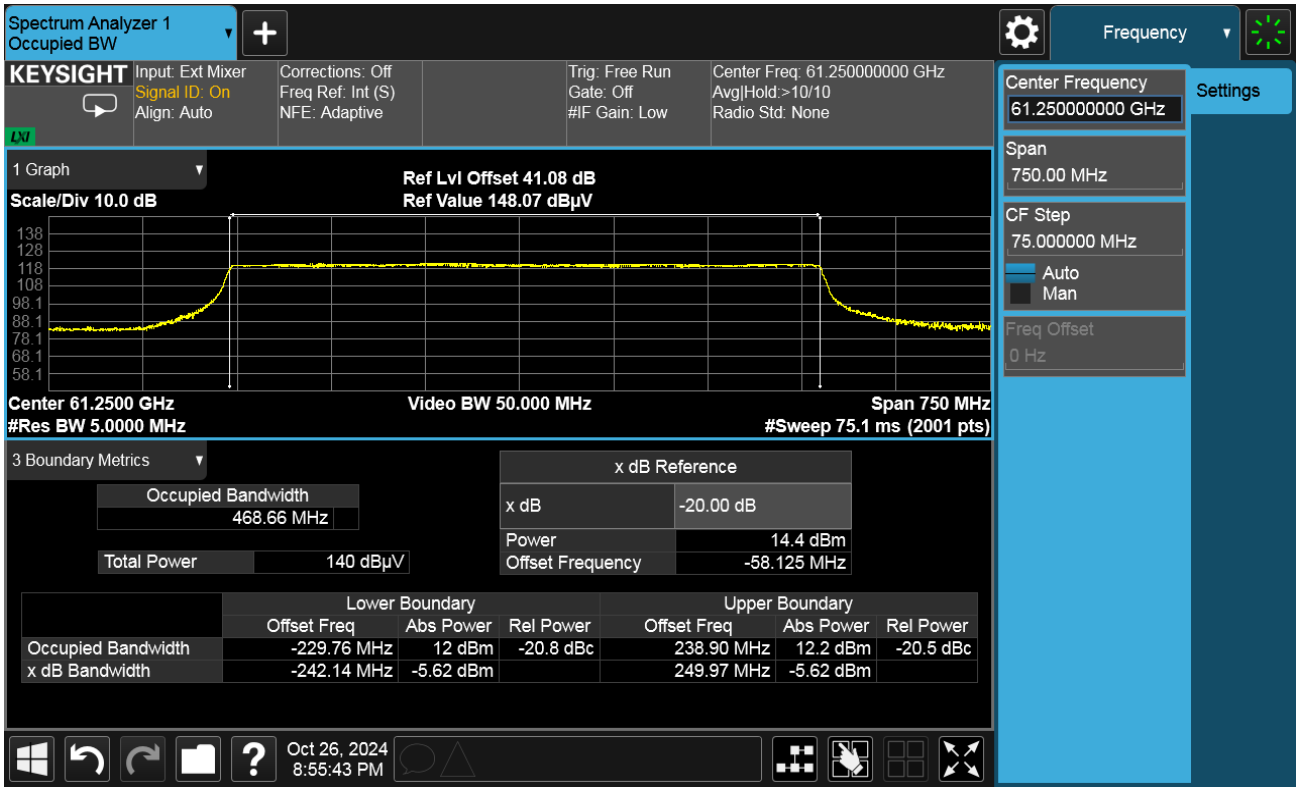

Note:

F_L = Center Frequency (MHz) + Lower Boundary Offset Frequency (MHz)

F_H = Center Frequency (MHz) + Upper Boundary Offset Frequency (MHz)

A.2 EIRP Test Result

Test Site	SIP-TR2	Test Engineer	Alisa Deng
Test Date	2024-10-16		

Frequency (MHz)	DSO		Reading Level (dBm)	Pre_Amplifier Gain (dB)	Substituted Level (dBm)
	V_ref (mV)	Detector			
61250	-44.002	PK	3.75	30.86	-27.11
	10.712	AV	-2.40	30.86	-33.26

Frequency (MHz)	Substituted Level (dBm)	Measurement Antenna Gain (dBi)	D_ref (m)	Peak EIRP (dBm)	Peak EIRP Limit (dBm)	AV EIRP (dBm)	AV EIRP Limit (dBm)	Result
61250	-27.11	24.77	0.85	14.89	43	--	--	Pass
	-33.26	24.77	0.85	--	--	8.74	40	Pass

Notes:

1. Substituted Level (dBm) = Reading Level (dBm) - Pre_Amplifier Gain (dB)
2. EIRP (dBm) = 21.98 – 20*log(λ) + 20*log(D_ref) + Substituted Level (dBm) - Measurement Antenna Gain (dBi)
3. Test Distance “D_ref” = 0.85m

A.3 Transmitter Spurious Emissions Test Result

Test Site	SIP-AC2	Test Engineer	Avrin Ding
Test Date	2024-10-23		

Frequency (MHz)	Reading Level (dBμV)	Factor (dB/m)	Measure Level (dBμV/m)	Limit (dBμV/m)	Margin (dB)	Detector	Polarization
Below 1GHz							
196.372	23.6	17.3	40.9	43.5	-2.6	QP	Horizontal
248.814	16.7	19.1	35.8	46.0	-10.2	QP	Horizontal
273.81	20.5	20.1	40.6	46.0	-5.4	QP	Horizontal
302.8	20.9	20.9	41.8	46.0	-4.2	QP	Horizontal
728.081	10.9	30.2	41.1	46.0	-4.9	QP	Horizontal
850.737	3.4	32.0	35.4	46.0	-10.6	QP	Horizontal
192.284	22.7	17.5	40.2	43.5	-3.3	QP	Vertical
196.372	23.5	17.3	40.8	43.5	-2.7	QP	Vertical
269.807	14.2	19.9	34.1	46.0	-11.9	QP	Vertical
703.486	12.0	29.7	41.7	46.0	-4.3	QP	Vertical
728.081	9.0	30.2	39.2	46.0	-6.8	QP	Vertical
850.141	10.6	32.0	42.6	46.0	-3.4	QP	Vertical

Notes:

1. Measure Level (dBμV/m) = Reading Level (dBμV) + Factor (dB/m)
   Factor (dB/m) = Cable Loss (dB) + Antenna Factor (dB/m)
2. The amplitude of radiated emissions (frequency range from 9KHz to 30MHz) is that proximity to ambient noise, which also are attenuated more than 20 dB below the permissible value. Therefore, the data is not presented in the report.
3. Test Distance “d” = 3m, Test height “h” = 0.8m

Test Site	SIP-AC2 & SIP-AC1	Test Engineer	Avrin Ding
Test Date	2024-10-22 ~ 2024-10-25		

Frequency (MHz)	Reading Level (dBμV)	Factor (dB/m)	Measure Level (dBμV/m)	Limit (dBμV/m)	Margin (dB)	Detector	Polarization
Between 1GHz and 40GHz							
7517.8	43.7	0.2	43.9	74.0	-30.1	Peak	Horizontal
7517.8	30.8	0.2	31.0	54.0	-23.0	Average	Horizontal
11417.6	40.9	4.3	45.2	74.0	-28.8	Peak	Horizontal
11417.6	28.9	4.3	33.2	54.0	-20.8	Average	Horizontal
16952.8	39.6	12.6	52.2	74.0	-21.8	Peak	Horizontal
16952.8	26.9	12.6	39.5	54.0	-14.5	Average	Horizontal
9561.2	42.4	2.2	44.6	74.0	-29.4	Peak	Vertical
9561.2	29.7	2.2	31.9	54.0	-22.1	Average	Vertical
11691.3	41.0	4.1	45.1	74.0	-28.9	Peak	Vertical
11691.3	29.0	4.1	33.1	54.0	-20.9	Average	Vertical
17270.7	39.8	13.4	53.2	74.0	-20.8	Peak	Vertical
17270.7	27.1	13.4	40.5	54.0	-13.5	Average	Vertical
28797.6	64.8	-9.6	55.2	74.0	-18.8	Peak	Horizontal
28797.6	62.7	-9.6	53.1	54.0	-0.9	Average	Horizontal
37395.2	54.0	-4.3	49.7	74.0	-24.3	Peak	Horizontal
37395.2	41.7	-4.3	37.4	54.0	-16.6	Average	Horizontal
39177.2	51.2	-0.3	50.9	74.0	-23.1	Peak	Horizontal
39177.2	39.5	-0.3	39.2	54.0	-14.8	Average	Horizontal
28799.8	59.4	-9.6	49.8	74.0	-24.2	Peak	Vertical
28799.8	52.9	-9.6	43.3	54.0	-10.7	Average	Vertical
36209.4	55.5	-5.9	49.6	74.0	-24.4	Peak	Vertical
36209.4	43.3	-5.9	37.4	54.0	-16.6	Average	Vertical
39276.2	51.5	0.0	51.5	74.0	-22.5	Peak	Vertical
39276.2	38.9	0.0	38.9	54.0	-15.1	Average	Vertical

Notes:

1. Measure Level (dBμV/m) = Reading Level (dBμV) + Factor (dB/m)
   Factor (dB/m) = Cable Loss (dB) + Antenna Factor (dB/m) - Pre_Amplifier Gain (dB)
2. Test Distance “d” = 3m, Test height “h” = 1.5m

Test Site	SIP-TR2	Test Engineer	Alisa Deng
Test Date	2024-10-17 ~ 2024-10-18		

Frequency (GHz)	Reading Level @ 0.75m (dBμV)	Factor (dB/m)	Measure Level @0.75m (dBμV/m)	Measure Level @3m (dBμV/m)	Power Density (pW/cm^2)	Limit (pW/cm^2)	Polarization
Above 40GHz							
49.203	22.47	45.78	68.25	56.21	0.1108	90.0000	Horizontal
49.092	22.65	45.78	68.43	56.39	0.1155	90.0000	Vertical
60.8475	25.11	41.55	66.66	54.62	0.0768	90.0000	Horizontal
60.834	25.10	41.55	66.65	54.61	0.0767	90.0000	Vertical
83.206	34.35	44.22	78.57	66.53	1.1927	90.0000	Horizontal
81.459	24.80	44.23	69.03	56.99	0.1326	90.0000	Vertical
120.776	15.71	57.15	72.86	60.82	0.3203	90.0000	Horizontal
122.959	15.43	58.00	73.43	61.39	0.3652	90.0000	Vertical
152.0495	16.04	60.01	76.05	64.01	0.6676	90.0000	Horizontal
157.295	15.95	59.67	75.62	63.58	0.6047	90.0000	Vertical
179.444	17.50	60.15	77.65	65.61	0.9650	90.0000	Horizontal
182.679	16.00	60.94	76.94	64.90	0.8195	90.0000	Vertical

Notes:

1. For 40 ~ 110GHz, Measure Level @0.75m = Reading Level @0.75m + Factor

Factor (dB) = Cable Loss (dB) + Antenna Factor (dB/m)

2. For 110 ~ 200GHz, Measure Level @0.75m = Reading Level @0.75m + Factor

Factor (dB) = Cable Loss (dB) + Antenna Factor (dB/m) + Mixer Conversion Loss (dB)

3. Measure Level @3m = Measure Level @0.75m + 20 * log(0.75m / 3m)

4. Power Density = $(10^8 / 377) * \{10^{[(\text{Measure Level@3m} -120) / 20]}\}^2$.

5. Test Distance “d” = 0.75m, Test height “h” = 0.8m

A.4 Frequency Stability Test Result

Test Site	SIP-TR1	Test Engineer	Alisa Deng
Test Mode	Mode 1	Test Date	2024-10-26

Voltage (%)	Power (VAC)	Temp (°C)	Low Frequency (GHz)	High Frequency (GHz)	Limit (GHz)	Result
100%	120	- 20	61.02007	61.48787	61 ~ 61.5	Pass
		- 10	61.01948	61.48780	61 ~ 61.5	Pass
		0	61.02057	61.48746	61 ~ 61.5	Pass
		+ 10	61.02075	61.48756	61 ~ 61.5	Pass
		+ 20	61.01975	61.48813	61 ~ 61.5	Pass
		+ 30	61.01944	61.48759	61 ~ 61.5	Pass
		+ 40	61.01976	61.48825	61 ~ 61.5	Pass
		+ 50	61.02130	**61.48902**	61 ~ 61.5	Pass
115%	138	+ 20	61.01969	61.48789	61 ~ 61.5	Pass
85%	102	+ 20	**61.01934**	61.48781	61 ~ 61.5	Pass

Worse Case Test Data Plots	
Low Frequency	High Frequency
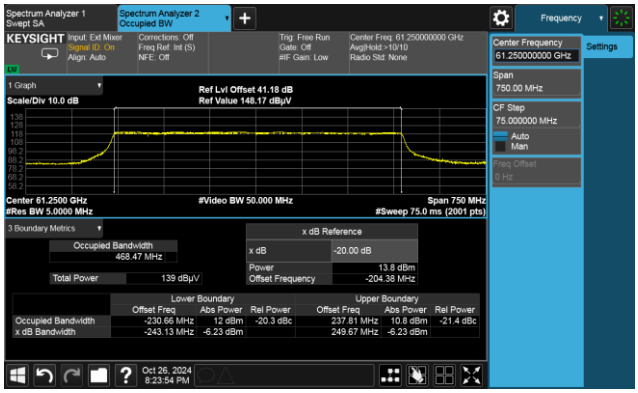	

Note:

Low Frequency (GHz) = Center Frequency (GHz) + Lower Boundary Offset Frequency (GHz)

High Frequency (GHz) = Center Frequency (GHz) + Upper Boundary Offset Frequency (GHz)

A.5 AC Conducted Emissions Test Result

Test Site	SIP-SR2	Test Date	2024-10-22
Test Engineer	Arvin Ding	Temp./Humidity	23.6°C /61.8%
Factor	SIP-SR2-ENV216_101684_E	Polarity	Line
EUT	Silver Shield	Test Voltage	AC 120V/60Hz
Test Mode	Mode 1		

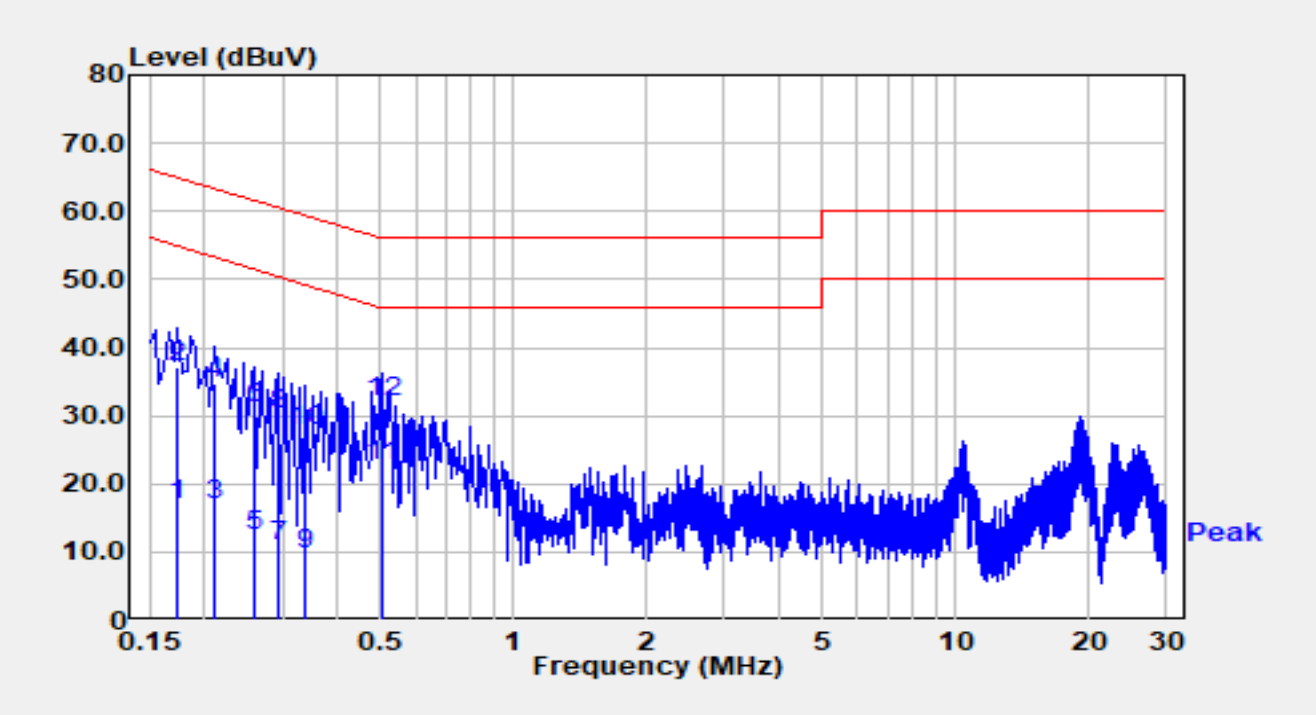

No	Mark	Frequency (MHz)	Reading (dBμV)	C.F (dB)	Measurement (dBμV)	Margin (dB)	Limit (dBμV)	Detector
1		0.174	7.20	9.73	16.93	-37.84	54.77	Average
2		0.174	27.26	9.73	37.00	-27.77	64.77	QP
3		0.210	7.00	9.78	16.78	-36.42	53.21	Average
4		0.210	25.05	9.78	34.83	-28.38	63.21	QP
5		0.258	2.57	9.80	12.37	-39.13	51.50	Average
6		0.258	21.19	9.80	30.99	-30.51	61.50	QP
7		0.294	1.17	9.81	10.97	-39.44	50.41	Average
8		0.294	20.24	9.81	30.05	-30.37	60.41	QP
9		0.338	-0.22	9.82	9.60	-39.65	49.25	Average
10		0.338	18.10	9.82	27.91	-31.34	59.25	QP
11	*	0.502	12.82	9.83	22.65	-23.35	46.00	Average
12		0.502	22.22	9.83	32.05	-23.95	56.00	QP

Notes:

1. " *", means this data is the worst emission level.

2. C.F (dB) = LISN Factor (dB) + Cable Loss (dB).

3. Measurement (dBμV) = Reading (dBμV) + C.F (dB).

Test Site	SIP-SR2	Test Date	2024-10-22
Test Engineer	Arvin Ding	Temp./Humidity	23.6°C /61.8%
Factor	SIP-SR2-ENV216_101684_E	Polarity	Neutral
EUT	Silver Shield	Test Voltage	AC 120V/60Hz
Test Mode	Mode 1		

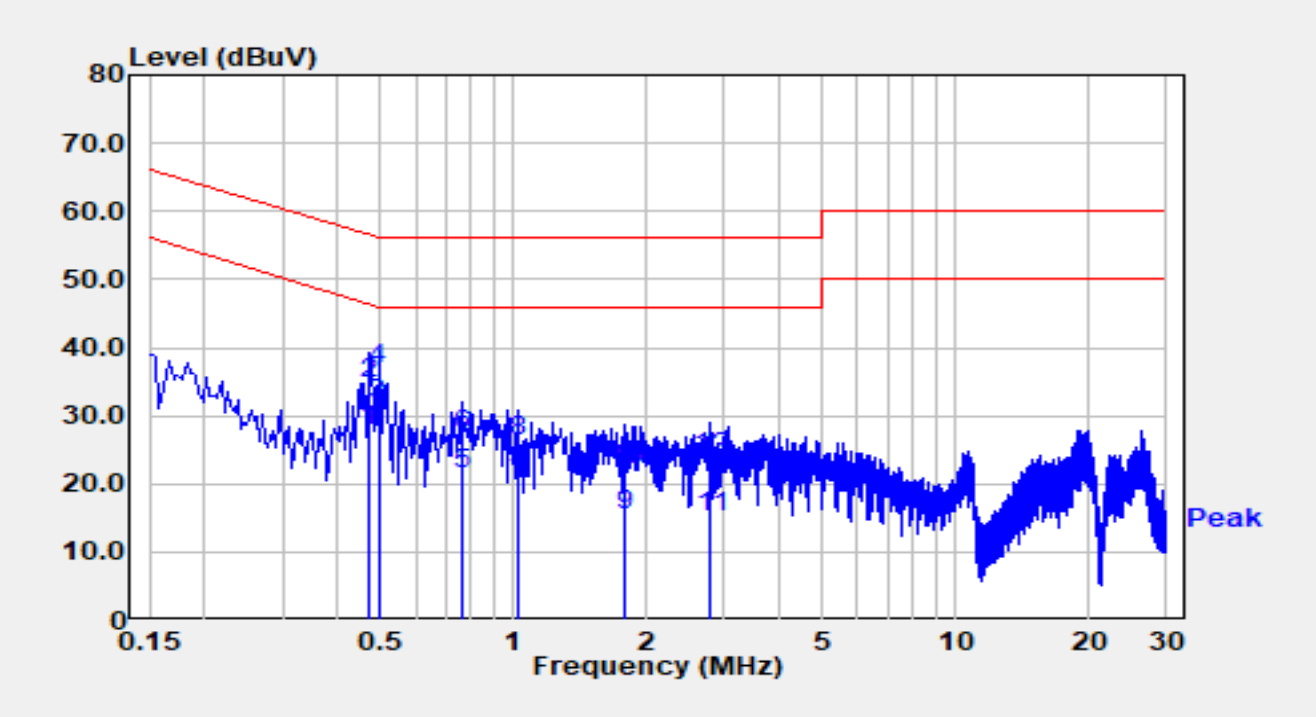

No	Mark	Frequency (MHz)	Reading (dBμV)	C.F (dB)	Measurement (dBμV)	Margin (dB)	Limit (dBμV)	Detector
1		0.470	17.98	9.81	27.79	-18.72	46.51	Average
2		0.470	24.78	9.81	34.59	-21.93	56.51	QP
3	*	0.494	21.82	9.81	31.63	-14.47	46.10	Average
4		0.494	27.05	9.81	36.86	-19.24	56.10	QP
5		0.762	11.54	9.84	21.38	-24.62	46.00	Average
6		0.762	17.33	9.84	27.17	-28.83	56.00	QP
7		1.018	10.07	9.84	19.91	-26.09	46.00	Average
8		1.018	16.50	9.84	26.34	-29.66	56.00	QP
9		1.786	5.35	9.93	15.28	-30.72	46.00	Average
10		1.786	12.24	9.93	22.17	-33.83	56.00	QP
11		2.798	5.19	10.03	15.22	-30.78	46.00	Average
12		2.798	13.91	10.03	23.94	-32.06	56.00	QP

Notes:

1. " *", means this data is the worst emission level.

2. C.F (dB) = LISN Factor (dB) + Cable Loss (dB).

3. Measurement (dBμV) = Reading (dBμV) + C.F (dB).

Appendix B – Test Setup Photograph

Refer to “2408RSU046-UT” file.

Appendix C – EUT Photograph

Refer to “2408RSU046-UE” file.

The End