FCC TEST REPORT
FCC ID:2BKTC-JZ-24001

Report Number.....:	**ZKT-240904L11051E**
Date of Test.....:	Aug. 15, 2024 to Sept. 02, 2024
Date of issue.....:	Sept. 02, 2024
Test Result .....:	PASS
Testing Laboratory.....:	**Shenzhen ZKT Technology Co., Ltd.**
Address .....:	1/F, No. 101, Building B, No. 6, Tangwei Community Industrial Avenue, Fuhai Street, Bao'an District, Shenzhen, China
Applicant's name .....:	**Dongguan Jinzhu Trading Co., Ltd**
Address .....:	Room 101, 21 Chuangye West Road, Ma Yong Town, Dongguan City, Guangdong Province
Manufacturer's name .....:	**Dongguan Jinzhu Trading Co., Ltd**
Address .....:	Room 101, 21 Chuangye West Road, Ma Yong Town, Dongguan City, Guangdong Province
Test specification:	
Standard.....:	FCC CFR Title 47 Part 15 Subpart C Section 15.231 ANSI C63.10:2013
Test procedure.....:	/
Non-standard test method .....:	N/A

This device described above has been tested by ZKT, and the test results show that the equipment under test (EUT) is in compliance with the FCC requirements. And it is applicable only to the tested sample identified in the report.
This report shall not be reproduced except in full, without the written approval of ZKT, this document may be altered or revised by ZKT, personal only, and shall be noted in the revision of the document.

Product name.....:	**Remote control \ light belt**
Trademark .....:	/
Model/Type reference.....:	JZ-24001
Model Difference.....:	JZ-24002 , JZ-24003, JZ-24004, JZ-24005, JZ-24006, JZ-24007, JZ-24008, JZ-24009, JZ-24010 JZ-24001 is a test model, and other models are derivative models. These models are identical on the circuit, only the model name and receiver are different. Therefore, the test data of JZ-24001 can be representative of the remaining model.
Ratings.....:	light belt input: DC 5-24 V Remote control input: DC 3V via button battery

Testing procedure and testing location:

Testing Laboratory.....:	**Shenzhen ZKT Technology Co., Ltd.**
Address.....:	1/F, No. 101, Building B, No. 6, Tangwei Community Industrial Avenue, Fuhai Street, Bao'an District, Shenzhen, China
Tested by (name + signature).....:	Alen He
Reviewer (name + signature)..... :	Joe Liu
Approved (name + signature).....:	Lake Xie

Table of Contents **Page**

1. VERSION 5

2. SUMMARY OF TEST RESULTS 6

2.1 TEST FACILITY 7

2.2 MEASUREMENT UNCERTAINTY 7

3. GENERAL INFORMATION 8

3.1 GENERAL DESCRIPTION OF EUT 8

3.2 DESCRIPTION OF TEST MODES 9

3.3 BLOCK DIGRAM SHOWING THE CONFIGURATION OF SYSTEM TESTED 9

3.4 DESCRIPTION OF SUPPORT UNITS(CONDUCTED MODE) 9

3.5 EQUIPMENTS LIST FOR ALL TEST ITEMS 10

4. EMC EMISSION TEST 10

4.1 CONDUCTED EMISSION MEASUREMENT 12

4.1.1 POWER LINE CONDUCTED EMISSION LIMITS 12

4.1.2 TEST PROCEDURE 13

4.1.3 DEVIATION FROM TEST STANDARD 13

4.1.4 TEST SETUP 13

4.1.5 EUT OPERATING CONDITIONS 13

4.1.6 TEST RESULTS 13

4.2 RADIATED EMISSION MEASUREMENT 14

4.2.1 RADIATED EMISSION LIMITS 14

4.2.2 TEST PROCEDURE 15

4.2.3 TEST SETUP 16

4.2.4 EUT OPERATING CONDITIONS 17

4.2.5 TEST RESULTS 17

5. BANDWIDTH TEST 22

5.1 APPLIED PROCEDURES / LIMIT 22

5.2 TEST PROCEDURE 22

5.3 DEVIATION FROM STANDARD 22

5.4 TEST SETUP 22

5.5 EUT OPERATION CONDITIONS 22

5.6 TEST RESULTS 23

6. CALCULATION OF AVERAGE FACTOR 24

7. DWELL TIME 26

7.1 APPLICABLE STANDARD 26

7.2 TEST PROCEDURE 26

7.3 DEVIATION FROM STANDARD 26

Table of Contents **Page**

7.4TEST SETUP 25
7.5 EUT OPERATION CONDITIONS 26
7.6 TEST RESULTS 27
8. ANTENNA REQUIREMENT 28
9. TEST SETUP PHOTO 29
10. EUT CONSTRUCTIONAL DETAILS 29

1. VERSION

Report No.	Version	Description	Approved
ZKT-240904L11051E	Rev.01	Initial issue of report	Sept. 02, 2024

2. SUMMARY OF TEST RESULTS

Test procedures according to the technical standards:

FCC Part15 (15.231) , Subpart C			
Standard Section	Test Item	Judgment	Remark
15.207	Conducted Emission	N/A	
15.209,15.231b	Fundamental &Radiated Spurious Emission Measurement	PASS	
15.231c	Occupy Bandwidth	PASS	
15.231a	Dwell time	PASS	
15.203	Antenna Requirement	PASS	

NOTE:

(1)" N/A" denotes test is not applicable in this Test Report

2.1 TEST FACILITY

Shenzhen ZKT Technology Co., Ltd.
Add. : 1/F, No. 101, Building B, No. 6, Tangwei Community Industrial Avenue, Fuhai Street, Bao'an District, Shenzhen, China

FCC Test Firm Registration Number: 692225
Designation Number: CN1299
IC Registered No.: 27033

2.2 MEASUREMENT UNCERTAINTY

The reported uncertainty of measurement y ± U，where expended uncertainty U is based on a standard uncertainty multiplied by a coverage factor of k=2，providing a level of confidence of approximately 95 %。

No.	Item	Uncertainty
1	Conducted Emission Test	±1.38dB
2	RF conducted power	±0.16dB
3	Conducted spurious emissions	±0.21dB
4	All radiated emissions (9k-30MHz)	±4.68dB
5	All radiated emissions (<1G)	±4.68dB
6	All radiated emissions (>1G)	±4.89dB
7	Temperature	±0.5°C
8	Humidity	±2%
9	Occupied Bandwidth	±4.96%

3. GENERAL INFORMATION

3.1 GENERAL DESCRIPTION OF EUT

Equipment	Remote control \ light belt
Test Model Name	JZ-24001
Hardware version	V1.0
Software version	V1.0
Operation Frequency:	433.96MHz
Modulation Type:	ASK
Antenna Type:	PCB Antenna
Antenna Gain:	0dBi
Power supply:	light belt input: DC 5-24 V Remote control input: DC 3V via button battery

3.2 DESCRIPTION OF TEST MODES

For All Emission	
Final Test Mode	Description
Transmitting mode	Keep the EUT in continuously transmitting mode

Note:

(1) Fully-charged battery is used during the test

3.3 BLOCK DIGRAM SHOWING THE CONFIGURATION OF SYSTEM TESTED

RE Spurious emissions

E-1
EUT

3.4 DESCRIPTION OF SUPPORT UNITS(CONDUCTED MODE)

The EUT has been tested as an independent unit together with other necessary accessories or support units. The following support units or accessories were used to form a representative test configuration during the tests.

Item	Equipment	Mfr/Brand	Model/Type No.	Series No.	Note
E1	Button cell	/	CR2025	/	EUT

Item	Shielded Type	Ferrite Core	Length	Note

Note:

(1) The support equipment was authorized by Declaration of Confirmation.
(2) For detachable type I/O cable should be specified the length in cm in 『Length』 column.
(3) “YES” is means “shielded” “with core”; “NO” is means “unshielded” “without core”.

3.5 EQUIPMENTS LIST FOR ALL TEST ITEMS

Radiation emissions& Radio Test equipment

Item	Equipment	Manufacturer	Type No.	Serial No.	Firmware Version	Last calibration	Calibrated until
1	Spectrum Analyzer (9kHz-26.5GHz)	KEYSIGHT	9020A	MY55370835	A.17.05	Nov. 02, 2023	Nov. 01, 2024
2	Spectrum Analyzer (10kHz-39.9GHz)	R&S	FSV40-N	100363	1.71 SP2	Nov. 02, 2023	Nov. 01, 2024
3	EMI Test Receiver (9kHz-7GHz)	R&S	ESCI7	100969	4.32	Nov. 02, 2023	Nov. 01, 2024
4	Bilog Antenna (30MHz-1500MHz)	Schwarzbeck	VULB9168	N/A	N/A	Nov. 13, 2023	Nov. 12, 2024
5	Horn Antenna (1GHz-18GHz)	Agilent	AH-118	071145	N/A	Nov. 13, 2023	Nov. 12, 2024
6	Horn Antenna (15GHz-40GHz)	A.H.System	SAS-574	588	N/A	Nov. 13, 2023	Nov. 12, 2024
7	Loop Antenna	TESEQ	HLA6121	58357	N/A	Nov. 16, 2023	Nov. 15, 2024
8	Amplifier (30-1000MHz)	EM Electronics	EM330 Amplifier	60747	N/A	Nov. 02, 2023	Nov. 01, 2024
9	Amplifier (1GHz-26.5GHz)	HuiPu	8449B	3008A00315	N/A	Nov. 02, 2023	Nov. 01, 2024
10	Amplifier (500MHz-40GHz)	QuanJuDa	DLE-161	097	N/A	Nov. 02, 2023	Nov. 01, 2024
11	Test Cable	N/A	R-01	N/A	N/A	Nov. 02, 2023	Nov. 01, 2024
12	Test Cable	N/A	R-02	N/A	N/A	Nov. 02, 2023	Nov. 01, 2024
13	Test Cable	N/A	R-03	N/A	N/A	Nov. 02, 2023	Nov. 01, 2024
14	Test Cable	N/A	RF-01	N/A	N/A	Nov. 02, 2023	Nov. 01, 2024
15	Test Cable	N/A	RF-02	N/A	N/A	Nov. 02, 2023	Nov. 01, 2024
16	Test Cable	N/A	RF-03	N/A	N/A	Nov. 02, 2023	Nov. 01, 2024
17	ESG Signal Generator	Agilent	E4421B	N/A	B.03.84	Nov. 02, 2023	Nov. 01, 2024
18	Signal Generator	Agilent	N5182A	N/A	A.01.87	Nov. 02, 2023	Nov. 01, 2024
19	Magnetic Field Probe Tester	Narda	ELT-400	0-0344	N/A	Nov. 16, 2023	Nov. 15, 2024
20	Wideband Radio Communication Test	R&S	CMW500	106504	V 3.7.22	Nov. 02, 2023	Nov. 01, 2024
21	MWRF Power Meter Test system	MW	MW100-RF CB	N/A	N/A	Nov. 02, 2023	Nov. 01, 2024
22	D.C. Power Supply	LongWei	TPR-6405D	N/A	N/A	\	\
23	EMC Software	Frad	EZ-EMC	Ver.EMC-CO N 3A1.1	N/A	\	\
24	RF Software	MW	MTS8310	V2.0.0.0	N/A	\	\
25	Turntable	MF	MF-7802BS	N/A	N/A	\	\
26	Antenna tower	MF	MF-7802BS	N/A	N/A	\	\

Conducted emissions Test

Item	Kind of Equipment	Manufacturer	Type No.	Serial No.	Firmware Version	Last calibration	Calibrated until
1	LISN	R&S	ENV216	101471	N/A	Nov. 14, 2023	Nov. 13, 2024
2	LISN	CYBERTEK	EM5040A	E1850400149	N/A	Nov. 02, 2023	Nov. 01, 2024
3	Test Cable	N/A	C-01	N/A	N/A	Nov. 02, 2023	Nov. 01, 2024
4	Test Cable	N/A	C-02	N/A	N/A	Nov. 02, 2023	Nov. 01, 2024
5	Test Cable	N/A	C-03	N/A	N/A	Nov. 02, 2023	Nov. 01, 2024
6	EMI Test Receiver	R&S	ESCI3	101393	4.42 SP3	Nov. 02, 2023	Nov. 01, 2024
7	Triple-Loop Antenna	N/A	RF300	N/A	N/A	Nov. 02, 2023	Nov. 01, 2024
8	Absorbing Clamp	DZ	ZN23201	15034	N/A	Nov. 07, 2023	Nov. 06, 2024
9	EMC Software	Frad	EZ-EMC	Ver.EMC-CON 3A1.1	N/A	\	\

4. EMC EMISSION TEST

4.1 CONDUCTED EMISSION MEASUREMENT

Test Requirement:	FCC Part15 C Section 15.207
Test Method:	ANSI C63.10:2013
Test Frequency Range:	150KHz to 30MHz
Receiver setup:	RBW=9KHz, VBW=30KHz, Sweep time=auto

4.1.1 POWER LINE CONDUCTED EMISSION LIMITS

(Frequency Range 150KHz-30MHz)

FREQUNCY (MHz)	Limit (dBuV)		Standard
	Quasi-peak	Average	
0.15 -0.5	66 - 56 *	56 - 46 *	FCC
0.50 -5.0	56.00	46.00	FCC
5.0 -30.0	60.00	50.00	FCC

Note:

(1) The tighter limit applies at the band edges.

(2) The limit of " * " marked band means the limitation decreases linearly with the logarithm of the frequency in the range.

The following table is the setting of the receiver

Receiver Parameters	Setting
Attenuation	10 dB
Start Frequency	0.15 MHz
Stop Frequency	30 MHz
IF Bandwidth	9 kHz

4.1.2 TEST PROCEDURE

a. The EUT was placed 0.8 meters from the horizontal ground plane with EUT being connected to the power mains through a line impedance stabilization network (LISN). All other support equipments powered from additional LISN(s). The LISN provide 50 Ohm/ 50uH of coupling impedance for the measuring instrument.
b. Interconnecting cables that hang closer than 40 cm to the ground plane shall be folded back and forth in the center forming a bundle 30 to 40 cm long.
c. I/O cables that are not connected to a peripheral shall be bundled in the center. The end of the cable may be terminated, if required, using the correct terminating impedance. The overall length shall not exceed 1 m.
d. LISN at least 80 cm from nearest part of EUT chassis.
e. For the actual test configuration, please refer to the related Item –EUT Test Photos.

4.1.3 DEVIATION FROM TEST STANDARD

No deviation

4.1.4 TEST SETUP

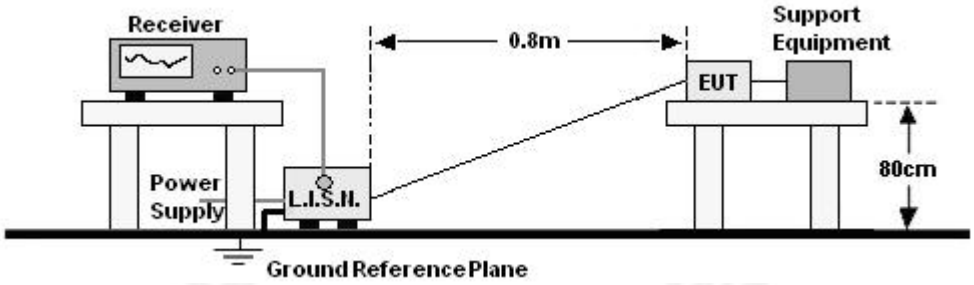

4.1.5 EUT OPERATING CONDITIONS

The EUT was configured for testing in a typical fashion (as a customer would normally use it). The EUT has been programmed to continuously transmit during test. This operating condition was tested and used to collect the included data.

4.1.6 TEST RESULTS

N/A

The product is powered by a button battery

4.2 RADIATED EMISSION MEASUREMENT

Test Requirement:	FCC Part15 C Section 15.209
Test Method:	ANSI C63.10:2013
Test Frequency Range:	9kHz to 25GHz
Test site:	Measurement Distance: 3m
Receiver setup:	

Frequency	Detector	RBW	VBW	Value
9KHz-150KHz	Quasi-peak	200Hz	600Hz	Quasi-peak
150KHz-30MHz	Quasi-peak	9KHz	30KHz	Quasi-peak
30MHz-1GHz	Quasi-peak	100KHz	300KHz	Quasi-peak
Above 1GHz	Peak	1MHz	3MHz	Peak
	Peak	1MHz	10Hz	Average

4.2.1 RADIATED EMISSION LIMITS

20dBc in any 100 kHz bandwidth outside the operating frequency band. In case the emission fall within the restricted band specified on 15.205(a), then the 15.231(b) limit in the table below has to be followed.

Frequencies(MHz)	Field Strength(micorvolts/meter)	Measurement Distance(meters)
0.009~0.490	2400/F(KHz)	300
0.490~1.705	24000/F(KHz)	30
1.705~30.0	30	30
30~88	100	3
88~216	150	3
216~960	200	3
Above 960	500	3

LIMITS OF RADIATED EMISSION MEASUREMENT

FREQUENCY (MHz)	Limit (dBuV/m) (at 3M)	
	PEAK	AVERAGE
Above 1000	74	54

Notes:

(1) The limit for radiated test was performed according to FCC PART 15C.

(2) The tighter limit applies at the band edges.

(3) Emission level (dBuV/m)=20log Emission level (uV/m).

FUNDAMENTAL AND HARMONICS EMISSION LIMITS

Fundamental Frequency (MHz)	Field Strength of Fundamental (microvolts/meter)	Field Strength of Spurious Emissions (microvolts/meter)
40.66 - 40.70	2,250	225
70 - 130	1,250	125
130 - 174	1,250 to 3,750 **	125 to 375 **
174 - 260	3,750	375
260 - 470	3,750 to 12,500 **	375 to 1,250 **
Above 470	12,500	1,250

** linear interpolations

[Where F is the frequency in MHz, the formulas for calculating the maximum permitted fundamental field strengths are as follows: for the band 130-174 MHz, μV/m at 3 meters = 56.81818(F) - 6136.3636; for the band 260-470 MHz, μV/m at 3 meters = 41.6667(F) - 7083.3333. The maximum permitted unwanted emission level is 20 dB below the maximum permitted fundamental level.]

FREQUENCY RANGE OF RADIATED MEASUREMENT (For unintentional radiators)

Highest frequency generated or Upper frequency of measurement used in the device or on which the device operates or tunes (MHz)	Range (MHz)
Below 1.705	30
1.705 – 108	1000
108 – 500	2000
500 – 1000	5000
Above 1000	5th harmonic of the highest frequency or 40 GHz, whichever is lower

Spectrum Parameter	Setting
Attenuation	Auto
Start Frequency	1000 MHz
Stop Frequency	10th carrier harmonic
RBW / VBW setting	1 MHz / 1 MHz for Peak, 1 MHz / 10Hz for Average

Receiver Parameter	Setting
Attenuation	Auto
Start ~ Stop Frequency	9kHz~150kHz / RB 200Hz for QP
Start ~ Stop Frequency	150kHz~30MHz / RB 9kHz for QP
Start ~ Stop Frequency	30MHz~1000MHz / RB 120kHz for QP

4.2.2 TEST PROCEDURE

a. The measuring distance of at 3 m shall be used for measurements at frequency up to 1GHz. For frequencies above 1GHz, any suitable measuring distance may be used.
b. The EUT was placed on the top of a rotating table 0.8 meters above the ground at a 3 meter open area test site. The table was rotated 360 degrees to determine the position of the highest radiation.
c. The height of the equipment or of the substitution antenna shall be 0.8 m; above 1GHz, the height was 1.5m, the height of the test antenna shall vary between 1 m to 4 m. Both horizontal and vertical polarizations of the antenna are set to make the measurement.

d. The initial step in collecting conducted emission data is a spectrum analyzer peak detector mode pre-scanning the measurement frequency range. Significant peaks are then marked and then Quasi Peak detector mode re-measured.
e. If the Peak Mode measured value compliance with and lower than Quasi Peak Mode Limit, the EUT shall be deemed to meet QP Limits and then no additional QP Mode measurement performed.
f. For the actual test configuration, please refer to the related Item –EUT Test Photos.

Note:

Both horizontal and vertical antenna polarities were tested
and performed pretest to three orthogonal axis. The worst case was X axis and the emissions were reported

4.2.3 TEST SETUP

（A）Radiated Emission Test-Up Frequency Below 30MHz

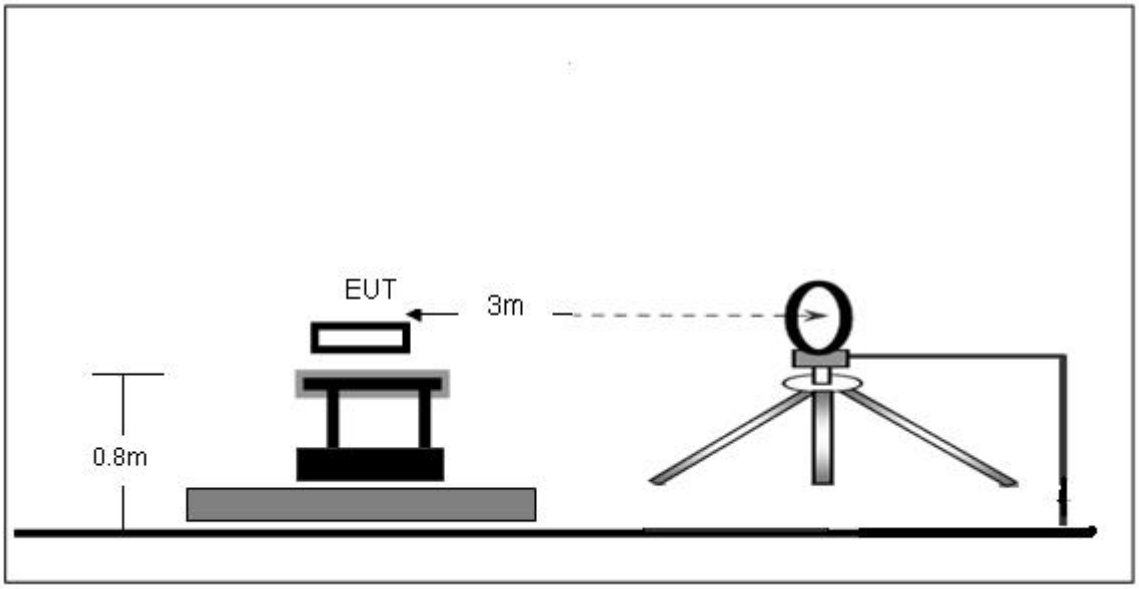

（B）Radiated Emission Test-Up Frequency 30MHz~1GHz

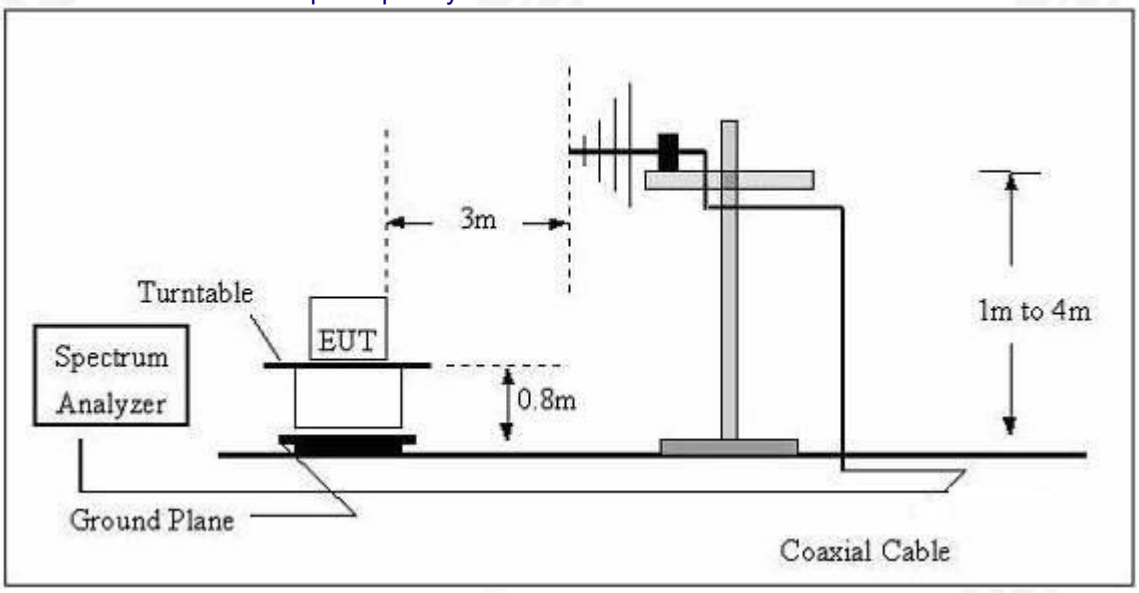

（C）Radiated Emission Test-Up Frequency Above 1GHz

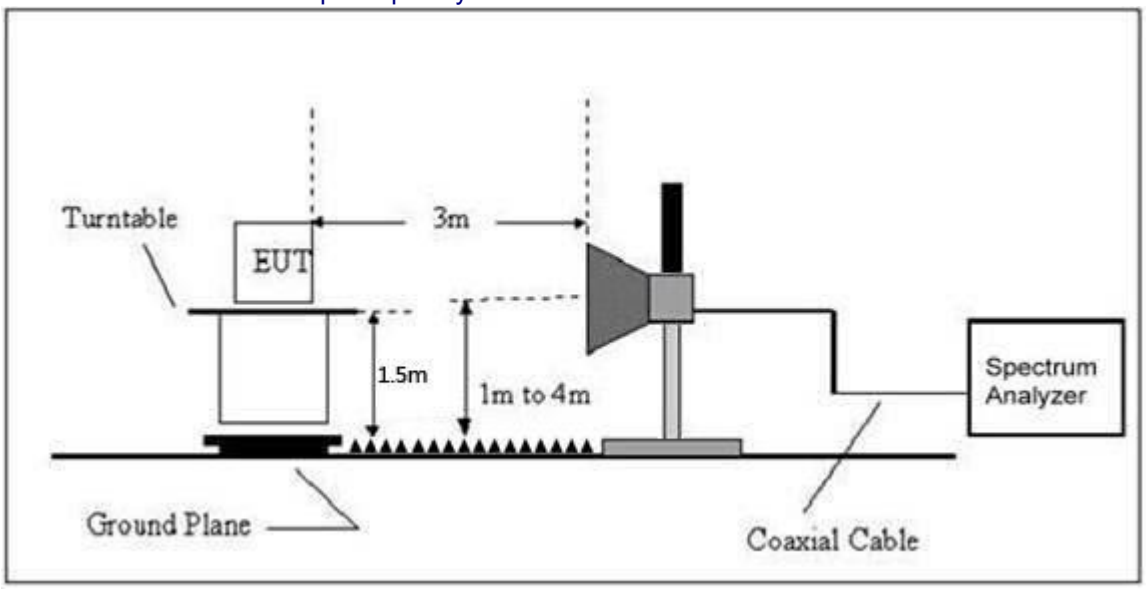

4.2.4 EUT OPERATING CONDITIONS

The EUT tested system was configured as the statements of 2.4 Unless otherwise a special operating condition is specified in the follows during the testing.

4.2.5 TEST RESULTS

Radiated Spurious Emission (Below 9KHz – 30MHz)

NOTE:
The amplitude of spurious emissions which are attenuated by more than 20dB below the permissible value has no need to be reported.
Distance extrapolation factor =40 log (specific distance/test distance)(dB);
Limit line = specific limits(dBuv) + distance extrapolation factor.

Radiated Spurious Emission (Between 30MHz – 1GHz)

Temperature :	24.9℃	Relative Humidity :	53%
Pressure :	101 kPa	Polarization :	Horizontal
Test Voltage :	DC 3V		
Test Mode :	TX Mode		

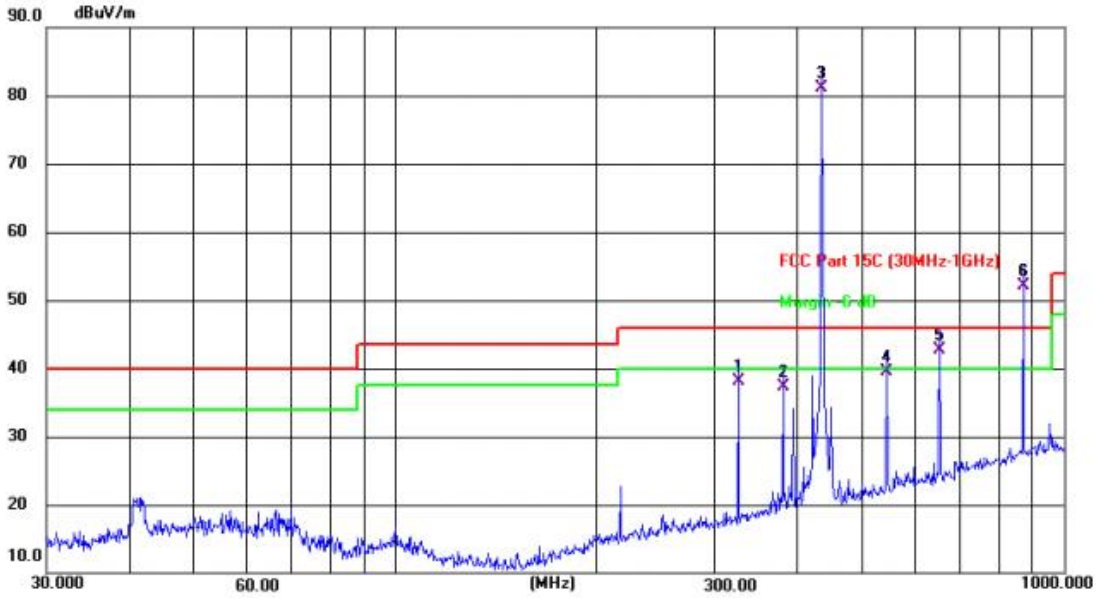

No.	Frequency (MHz)	Reading (dBuV)	Factor (dB/m)	Level (dBuV/m)	Limit (dBuV/m)	Margin (dB)	Detector
1	325.5957	45.55	-7.46	38.09	46.00	-7.91	QP
2	379.9141	43.53	-6.22	37.31	46.00	-8.69	QP
3 *	434.0650	86.29	-5.18	84.11	100.83	-16.72	peak
4	543.2740	42.88	-3.30	39.58	46.00	-6.42	QP
5 !	651.9415	44.20	-1.42	42.78	46.00	-3.22	QP
6 X	869.1300	50.43	1.73	55.16	80.83	-25.67	peak

Remarks:
1.Final Level =Receiver Read level + Antenna Factor + Cable Loss – Preamplifier Factor
2.The emission levels of other frequencies are very lower than the limit and not show in test report.

Temperature :	24.9℃	Relative Humidity :	53%
Pressure :	101 kPa	Polarization :	Vertical
Test Voltage :	DC 3V		
Test Mode :	TX Mode		

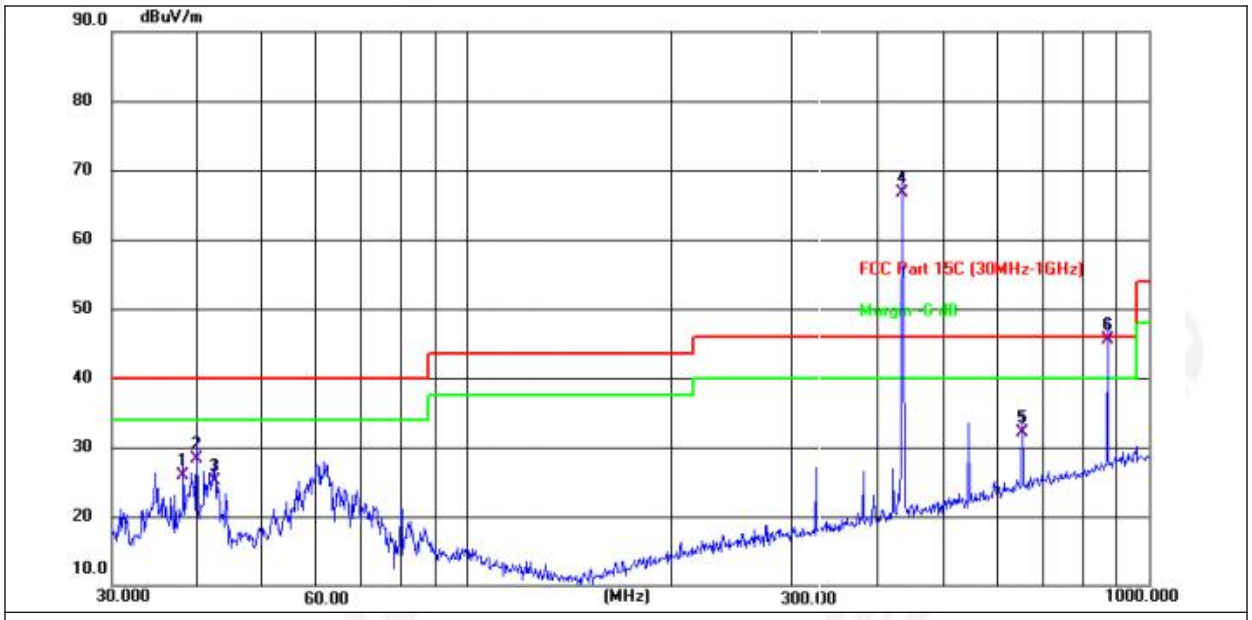

No.	Frequency (MHz)	Reading (dBuV)	Factor (dB/m)	Level (dBuV/m)	Limit (dBuV/m)	Margin (dB)	Detector
1	38.2120	35.99	-10.00	25.99	40.00	-14.01	QP
2	39.9941	38.02	-9.69	28.33	40.00	-11.67	QP
3	42.4508	34.54	-9.45	25.09	40.00	-14.91	QP
4 *	434.0650	71.86	-5.18	69.68	100.83	-31.15	peak
5	651.9415	33.47	-1.42	32.05	46.00	-13.95	QP
6 !	869.1300	43.79	1.73	48.52	80.83	-32.31	peak

Remarks:
1.Final Level =Receiver Read level + Antenna Factor + Cable Loss – Preamplifier Factor
2.The emission levels of other frequencies are very lower than the limit and not show in test report.

For average Emission

Frequency MHz	Peak Level dBuV/m	Duty cycle factor	Average Level dBuV/m	Limit PK	Limit AV	Margin PK	Margin AV	Polarization
433.92	84.11	-10.46	73.65	100.83	80.83	-16.72	-7.18	Horizontal
867.84	55.16	-10.46	44.7	80.83	60.83	-25.67	-16.13	Horizontal

Notes: 1. Average emission Level = Peak Level + Duty cycle factor
2. Duty cycle level please see clause 6.

Frequency MHz	Peak Level dBuV/m	Duty cycle factor	Average Level dBuV/m	Limit PK	Limit AV	Margin PK	Margin AV	Polarization
433.92	69.68	-10.46	59.22	100.83	80.83	-31.15	-21.61	Vertical
867.84	48.52	-10.46	38.06	80.83	60.83	-32.31	-22.77	Vertical

Notes: 1. Average emission Level = Peak Level + Duty cycle factor
2. Duty cycle level please see clause 6.

Radiated Spurious Emission (1GHz to 10th harmonics)

Frequency MHz	Peak Level dBuV/m	Duty cycle factor	Average Level dBuV/m	Limit		Margin dB		Polarization
				PK	AV	PK	AV	
1301.76	45.62	-10.46	35.16	74	54	-28.38	-18.84	H
1739.68	44.55	-10.46	34.09	80.8	60.8	-36.25	-26.71	H
2179.6	44.57	-10.46	34.11	80.8	60.8	-36.23	-26.69	H
2184.6	43.28	-10.46	32.82	80.8	60.8	-37.52	-27.98	H
3065.44	43.36	-10.46	32.9	74	54	-30.64	-21.1	H
1301.76	45.05	-10.46	34.59	74	54	-28.95	-19.41	V
1739.68	43.11	-10.46	32.65	80.8	60.8	-37.69	-28.15	V
2179.6	44.58	-10.46	34.12	80.8	60.8	-36.22	-26.68	V
2184.6	43.05	-10.46	32.59	80.8	60.8	-37.75	-28.21	V
3065.44	42.93	-10.46	32.47	74	54	-31.07	-21.53	V

Notes: 1.Average emission Level = Peak Level + Duty cycle factor

2.Duty cycle level please see clause 6.

5. BANDWIDTH TEST

5.1 APPLIED PROCEDURES / LIMIT

According to FCC 15.231(c) requirement:

The bandwidth of the emission shall be no wider than 0.25% of the center frequency for devices operating between 70 MHz to 900 MHz. Those devices operating above 900 MHz, the emission spurious shall be no wider than 0.5% of the center frequency. Bandwidth is determined at the points 20 dB down from the modulated carrier.

B.W (20dBc) Limit = 0.25% * f(MHz) = 0.25% * 433.92MHz = 1.0848MHz

Spectrum Parameter	Setting
Attenuation	Auto
Span Frequency	> Measurement Bandwidth or Channel Separation
RB	100KHz
VB	≥RBW
Detector	Peak
Trace	Max Hold
Sweep Time	Auto

5.2 TEST PROCEDURE

a. The EUT was directly connected to the spectrum analyzer and antenna output port as show in the block diagram below,
b. Spectrum Setting : RBW= 100KHz, VBW≥ RBW, Sweep time = Auto.

5.3 DEVIATION FROM STANDARD

No deviation.

5.4 TEST SETUP

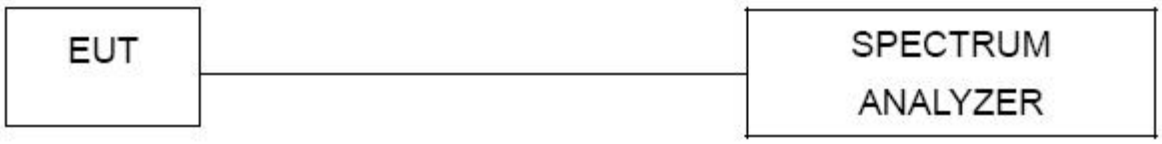

5.5 EUT OPERATION CONDITIONS

The EUT tested system was configured as the statements of 2.4 Unless otherwise a special operating condition is specified in the follows during the testing.

5.6 TEST RESULTS

Temperature :	25.1 ℃	Relative Humidity :	55%
Pressure :	101kPa	Test Voltage :	DC 3V
Test Mode :	TX Mode		

Frequency	20dB Bandwidth (kHz)	Limit (MHz)	Result
433.96MHz	392.6	1.0848	PASS

Mode 1

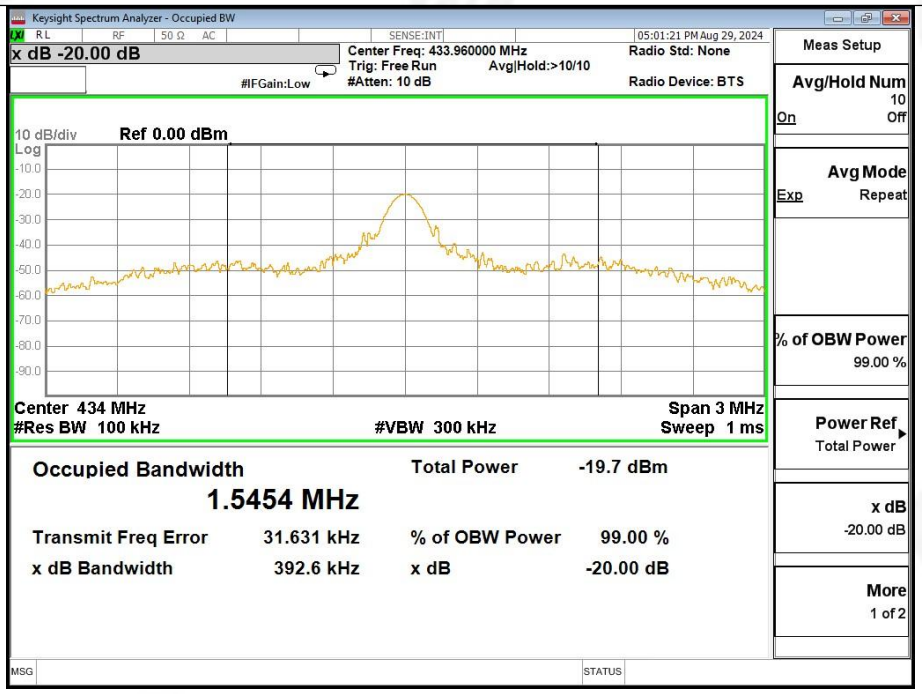

6. CALCULATION OF AVERAGE FACTOR

The output field strengths of specification in accordance with the FCC rules specify measurements with an average detector. During the test, a spectrum analyzer incorporating a peak detector was used. Therefore, a reduction factor can be applied to the resultant peak signal level and compared to the limit for measurement instrumentation incorporating an average detector.

The duty cycle is measured by placing the spectrum analyzer to set zero span at 0.1MHz resolution bandwidth.

Averaging factor in dB =20log (duty cycle)

Duty Cycle = (1.2ms*8+0.4ms*17)/50.7ms=0.3

Therefore, the averaging factor is found by 20log0.3= -10.46dB

Test plot as follows:

Note: aperiodic.

Cycle

7. DWELL TIME

7.1 APPLICABLE STANDARD

According to FCC 15.231(a) requirement:

A manually operated transmitter shall employ a switch that will automatically deactivate the transmitter within not more than 5 seconds of being released.

7.2 TEST PROCEDURE

Check the calibration of the measuring instrument using either an internal calibrator or a known signal from an external generator.

1.Position the EUT without connection to measurement instrument. Turn on the EUT and connect its antenna terminal to measurement instrument via a low loss cable. Then set it to any one measured frequency within its operating range, and make sure the instrument is operated in its linear range.

2.Set RBW to 1MHz and VBW of spectrum analyzer to 3MHz with a convenient frequency span including 100 kHz bandwidth from band edge.

3.Measure the highest amplitude appearing on spectral display and set it as a reference level. Plot the graph with marking the highest point and edge frequency.

4.Repeat above procedures until all measured frequencies were complete.

7.3 DEVIATION FROM STANDARD

No deviation.

7.4 TEST SETUP

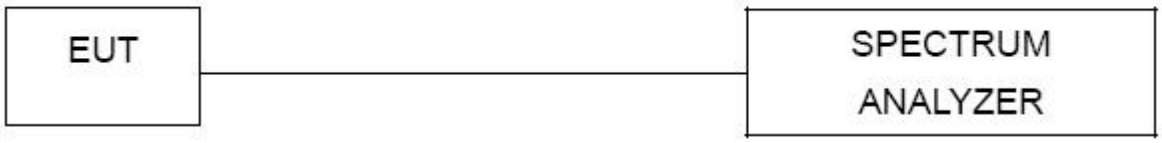

7.5 EUT OPERATION CONDITIONS

The EUT tested system was configured as the statements of 2.4 Unless otherwise a special operating condition is specified in the follows during the testing.

7.6 TEST RESULTS

Dwell time (second)	Limit (second)	Result
0.24	<5	Pass

Test plot as follows:

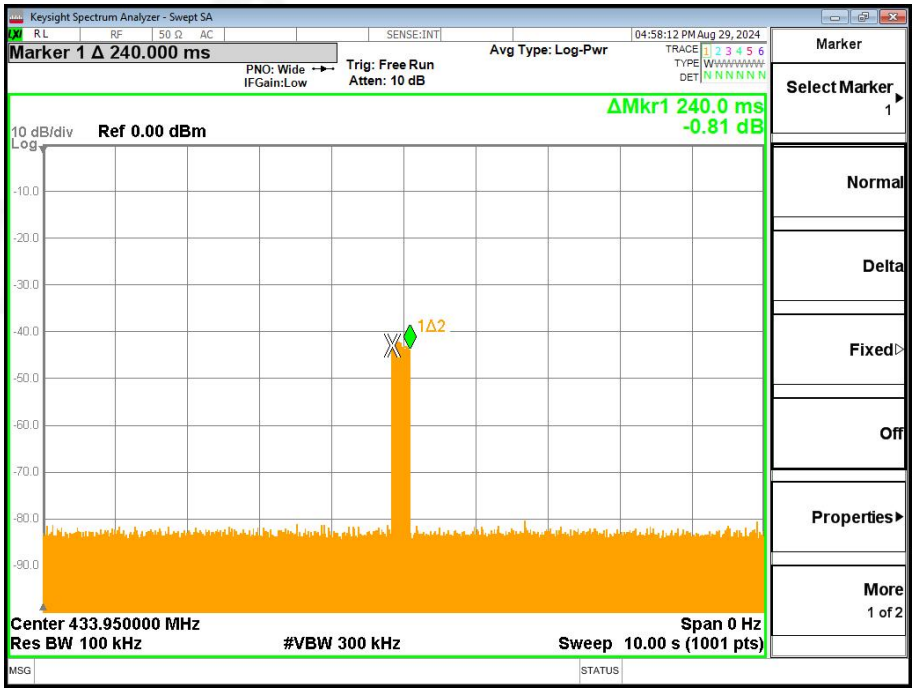

8. ANTENNA REQUIREMENT

Standard requirement:	FCC Part15 C Section 15.203
15.203 requirement: An intentional radiator shall be designed to ensure that no antenna other than that furnished by the responsible party shall be used with the device. The use of a permanently attached antenna or of an antenna that uses a unique coupling to the intentional radiator, the manufacturer may design the unit so that a broken antenna can be replaced by the user, but the use of a standard antenna jack or electrical connector is prohibited.	
EUT Antenna:	
The antenna is PCB Antenna, the best case gain of the antennas are 0dBi, reference to the appendix II for details	

9. TEST SETUP PHOTO

Reference to the appendix I for details.

10. EUT CONSTRUCTIONAL DETAILS

Reference to the appendix II for details.

※※※※※ END OF REPORT ※※※※※