GAMING HEADSET

TACTICAL ESPIONAGE ACTION
METAL GEAR SOLID Δ
SNAKE EATER

INSTRUCTION MANUAL

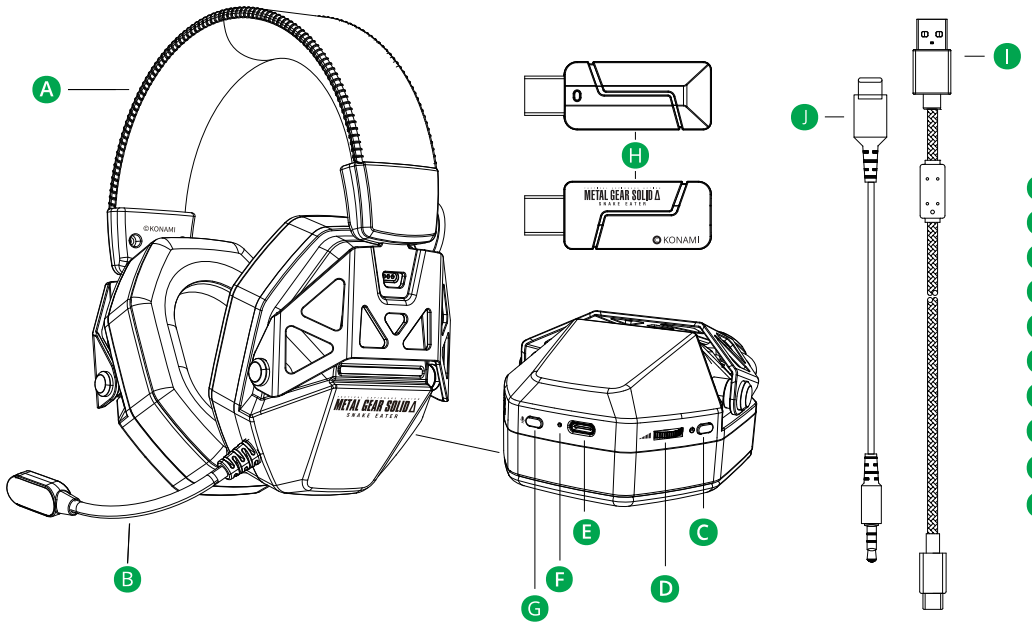

- A Adjustable Headband
- B MIC Boom
- C Power Button
- D Volume Control
- E Charge & Audio Port
- F LED Indicator Light
- G MIC/Mute (Wireless Mode) Button
- H 2.4G Wireless USB Dongle
- I USB-C to USB-A Cable
- J USB-C to 3.5mm AUX Cable

NEED HELP?

Have any questions or comments about your product? Need help with trouble-shooting, service, or repair?

CONTACT US

https://www.gamestop.com/contact
Phone: 1 (800) 883-8895

WHAT'S INCLUDED

- 1x Wired Gaming Headset
- 1x 2.4G Wireless USB Dongle
- 1x USB-C to USB-A Cable
- 1x USB-C to 3.5mm Cable

SPECIFICATIONS

- Connection: 2.4G Wireless (via dongle), Bluetooth 5.3, or Wired (3.5mm/USB-A)
- Frequency Response: 20Hz – 20kHz
- Impedence: 32 Ω
- Sensitivity: 112dB ± 3dB
- Drivers: 50mm
- Weight: 335g / 0.74lbs
- Ear Cushion: Memory Foam
- Battery Capacity: 1000mA
- Charging Time: 2.5 Hours
- Battery Life: Up to 20 Hours
- Microphone Sensitivity: -36 ± 3dB
- Microphone Pick-up Pattern: Omnidirectional
- Stand-by: After 5min on inactivity

CHARGE THE HEADSET

Connect the included USB charging cable to the headset's charging port.

Plug the other end into a USB power source.

The indicator light will illuminate red while charging. A full charge takes approximately 2 hours.

CONNECT THE HEADSET

Tip: Charge fully before first use.

Option 1 - Wired USB-C to 3.5mm AUX:
Plug the USB-C end of the cable into the designated port on the headset.

Plug the 3.5mm end of the cable into the headphone jack on your PC. The headset is ready for use.

Option 2 - Wired USB-C to USB-A:

Plug the USB-C end of the cable into the designated port on the headset. Plug the USB-A end of the cable into the USB-A port on your PC.

Press and hold the button until the earcup LED lights up.

On your PC, make sure the audio output is set to "Headphones (Metal Gear Solid)".

Option 3 - 2.4G Wireless/Dongle:

Connect the USB dongle to an available USB-A port on your PC. The indicator light will begin flashing green.

Press and hold the power button on the headset for 3 seconds.

The light on the dongle will turn solid green once the headset is successfully connected.

On your PC, make sure the audio output is set to "Headphones (Metal Gear Solid-2.4G)".

Option 4 - Wireless Bluetooth:

Power on the headset. Press and hold the MIC/Mute button for 3 seconds until a blue light starts flashing. This indicates the headset is in pairing mode.

Open the Bluetooth settings on your device and locate the "Metal Gear Solid Headset" in the list of available devices and select it to connect.

IMPORTANT

Re-establish a Bluetooth Connection:

To activate bluetooth pairing, press and hold the power button and MIC/Mute button simultaneously for 3 seconds.

Mute/Unmute:

Quick press the MIC/Mute button to switch between muting and unmuting the microphone.

When the microphone is actively picking up sound (live), the tip of the MIC will glow red. If your microphone is muted, there will be no light on the MIC tip.

Standy-by Mode:

If your headset has been inactive and disconnected for 5 minutes, it will automatically go into standby mode to save power.

To reconnect it, simply press the power button to wake it up. It should then automatically try to reconnect to your device.

IMPORTANT SAFETY INSTRUCTIONS

WARNING: When using this product, basic precautions should always be followed, including the following:

All cautions and warnings should be followed.

Hearing Safety:

- Prolonged exposure to loud sounds can damage your hearing. Use the 60/60 rule: listen at 60% of the maximum volume for a maximum of 60 minutes, followed by a break.
- Avoid using your headset in situations where you need to be aware of your surroundings, such as driving or cycling.
- If you need to block out noise, consider using earplugs instead of increasing the volume on your headset.
- If you experience any hearing loss or ringing in your ears, stop using your headset and consult a doctor.

General Safety:

- Do not use your headset while operating heavy machinery or driving.
- Do not use your headset while swimming or showering.
- Do not expose your headset to extreme temperatures or direct sunlight.
- Do not use harsh chemicals or cleaning agents to clean your headset.
- Do not modify or attempt to repair your headset yourself.
- Discontinue use if your headset is damaged.
- Store your headphones in a cool, dry place.

This device complies with Part 15 of the FCC Rules. Operation is subject to the following two conditions:

(1) this device may not cause harmful interference, and
(2) this device must accept any interference received, including interference that may cause undesired operation.

Shielded cables must be used with this unit to ensure compliance with the Class B FCC limits.

Warning: Changes or modifications to this unit not expressly approved by the party responsible for compliance could void the user's authority to operate the equipment.

NOTE: This equipment has been tested and found to comply with the limits for a Class B digital device, pursuant to Part 15 of the FCC Rules. These limits are designed to provide reasonable protection against harmful interference in a residential installation. This equipment generates, uses and can radiate radio frequency energy and, if not installed and used in accordance with the instructions, may cause harmful interference to radio communications.
However, there is no guarantee that interference will not occur in a particular installation·

If this equipment does cause harmful interference to radio or television reception, which can be determined by turning the equipment off and on, the user is encouraged to try to correct the interference by one or more of the following measures:

- Reorient or relocate the receiving antenna.
- Increase the separation between the equipment and receiver.
- Connect the equipment into an outlet on a circuit different from that to which the receiver is connected.
- Consult the dealer or an experienced radio/TV technician for help.

Changes or modifications not expressly approved by the party responsible for compliance could void the user's authority to operate the equipment.

Model: 24CL-KNMI-MGSDeltaRGBHeadset
SKU: 411029
Made in China
Manufactured for Geeknet, Inc.
FCC ID: 2BKUN-KNMI-MGSD

RF Exposure Information
The device has been evaluated to meet general RF exposure requirement.
The device can be used in portable exposure condition, compliance with exposure requirements.

© Konami Digital Entertainment
This product was produced by agreement of Geeknet, Inc.

Geeknet, Inc
625 Westport Pkwy, Grapevine, TX 76051
Phone: 1 (800) 883 - 8895