70*100mm*8P 115g 铜版纸 单色印刷 拉页

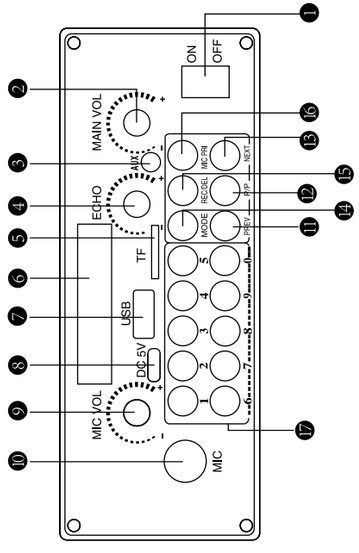

1. Panel interpretation

① Switch: Control the audio power, turn it on and off.

②Main Volume: Control the music volume. Turn right to increase and left to decrease.

③ AUX:

External sound input, connect to 3.5mm audio cable to achieve amplification or playback.

④ Microphone reverberation (ECHO):

While the microphone is in use, rotate this knob to adjust the microphone reverberation:

Turning it to the right increases the reverberation, turning it to the left weakens the reverberation.

⑤ TF card:

Insert the TF card and play MP3 music files.

⑥ Display screen:

Display various usage status of the speaker.

⑦ U disk input:

Insert the USB flash drive and play MP3 music files.

⑧ USB charging:

When the speaker is out of power, plug in the charger to charge.

⑨ Microphone volume:

To adjust the microphone volume, turn right to increase and left to decrease.

⑩ Microphone input:

Connect to a wired microphone or wireless microphone receiver with a 6.5mm interface.

⑪Previous song:
Short press to switch to the previous music or the previous radio channel.
⑫Pause/Play:
Control play and pause.
⑬Next song: Short press to switch to the next music or next radio channel.
⑭Mode/LED:
Short press to switch the speaker playback mode: Bluetooth/radio/TF card/U disk/AUX.
Long press to control the light switch and flash mode switching.
⑮Recording/Delete:
After inserting the TF card or USB flash disk, connect the microphone and press this button, the screen will show a timer, then you can start the recording, when the recording is finished, press this button again to end the recording and automatically enter the recording playback. If you are not satisfied with the recording, you can long press this button to delete the recording during playback.
⑯Microphone Priority/Vocal Cut(MIC PRI/VOC CUT):
Short press "MIC PRI/VOC CUT"to enter “Microphone priority” mode. When the microphone is speaking, the background music subsides,the shouting stopped and the background music rise again.
Short press Press "MIC PRI/VOC CUT" again,it return to normal mode.

Long press "MIC PRI/VOC CUT" to enter “VOC CUT” mode,i.e. backing vocals mode, eliminating the original vocals and keeping only the background music.
⑰ Number keys and special effect sound keys
Short press the number keys to select the corresponding serial number of the song. Long press the number for special effect sound playback：
1=contempt，2=Embarrassment，3=What is it，4=Machine Gun，5=Laughter， 6=Applause， 7=Flying Kiss，8=Cheer，9=Surprised，0=Doubt

2. Bluetooth mode

1. This machine’s Bluetooth version is Bluetooth 5.0, supporting HSP, HFP, A2DP, AVRCP protocol, with Chinese prompt tone, Bluetooth device.

2. Turn on the power of the speaker. After the speaker makes a "ticking" sound, it is officially turned on.

In the absence of any music media connected to the speaker, the speaker will default to Bluetooth mode, accompanied by a prompt sound: Bluetooth mode.

At this time, turn on the phone, light up the Bluetooth icon, and automatically search for Bluetooth signal, click the Bluetooth name to pair and connect.

(The name is the audio model.)

3. After the Bluetooth connection is successful, play music or watch movies through your mobile phone with amplified sound.

MADE IN CHINA

3. TF card mode

1. Insert the TF card in Bluetooth mode and automatically enter TF playback mode.

If a TF card device is inserted into the speaker, it will enter TF mode directly after booting.

2. Remove the TF card device and the speaker will automatically enter Bluetooth mode.

4. U disk mode

1. When turning on the Bluetooth mode, insert the USB flash drive and automatically enter the USB playback mode.

If a USB flash drive is plugged into the speaker, it will enter USB flash drive mode directly after booting.

2. Remove the USB flash drive and the speaker will automatically enter Bluetooth mode.

5. AUX-IN mode

When the phone is powered on, plug in the AUX cable and it will automatically enter AUX mode.

6. FM mode

In the power-on state, use the "Mode" key to switch to FM mode prompts music, automatically enter FM mode.

Long press the “P/P” button to automatically search.

Short press “P/P” button to switch between mute and non-mute.

Press "Previous Song" and "Next Song" to switch channels on the radio station.

7. Charge

1. Insert the USB cable into the speaker and connect it to the 5V charger or computer.

The built-in battery of the speaker can be charged, and the screen has a charging display.

Thank you for purchasing and using our company’s products. In order to enable you to operate this machine as quickly and easily as possible, please carefully review it before starting to use it read this manual.

This unit is an outdoor portable speaker with stylish design. Native support Bluetooth 5.0 protocol, supports smartphones, tablets, notebooks, etc.

A device with Bluetooth audio function, designed with a strap and handle for you to carry，Easy to carry, easy to travel, enjoy music without restraint, supports TF Cards, U disks and mobile phones with Bluetooth function, notebooks, computers, MP3，Audio input part of MP4 and other devices.

The speaker comes with two rechargeable wireless mcrophones, allowing multiple people to sing, speak and more at the same time.

Precautions:

■ Do not hit the main unit severely.

■ Please do not use it near strong magnetic fields or electric fields.

■ Please avoid direct light or heating appliances.

■ Never disassemble, repair or modify it by yourself.

■ When cleaning, please use a slightly damp cloth to clean the surface of the machine.

■ When used at low voltage, it may cause sound distortion. Please charge it in time.

Please disconnect the power supply when not in use for a long time.

■ Bluetooth function is compatible with common smartphones, tablets, etc.

Dear customer,

Hello! Thankyou for purchasing from us. If you have any questions or concerns about this product,pleasecontactus at the following E-mail address: **sales@szlingqi.com**, we are happy to help you and provide happy and satisfactory after-sales service.

If you are satisfied with this product,please provide us withrelevant feedback and share your shopping experience with other customers.If you send us ascreenshot of the posted review and order number viaemail address: **sales@szlingqi.com**,we will provide you with alifetime warranty (product lost/damaged/miss-ing accessories during use)

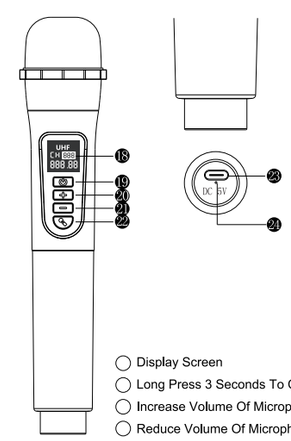

- Display Screen
- Long Press 3 Seconds To Control On / Off
- Increase Volume Of Microphone
- Reduce Volume Of Microphone
- Change The Microphone Sound Effects
- Charging Port
- Charging Light

KARAOKE MACHINE

USER MANUAL

This product is suitable for:
Singing, speeches, fitness, promotions, classes, mountaineering outings, etc.

FCC Warnning:

This equipment has been tested and found to comply with the limits for a Class B digital device, pursuant to part 15 of the FCC Rules. These limits are designed to provide reasonable protection againstharmful interference in a residential installation. This equipment generates, uses and can radiateradio frequency energy and, if not installed and used in accordance with the instructions, maycause harmful interference to radio communications. However, there is no guarantee thatinterference will not occur in a particular installation. If this equipment does cause harmfulinterference to radio or television reception, which can be determined by turning the equipmentoff and on, the user is encouraged to try to correct the interference by one or more of thefollowing measures:

- Reorient or relocate the receiving antenna.
- Increase the separation between the equipment and receiver.
- Connect the equipment into an outlet on a circuit different from that to which the receiver is connected.
- Consult the dealer or an experienced radio/TV technician for help.

Caution: Any changes or modifications to this device not explicitly approved by manufacturer could void your authority to operate this equipment.

This device complies with part 15 of the FCC Rules. Operation is subject to the following two conditions:

(1)This device may not cause harmful interference, and (2) this device must accept any interference received, including interference that may cause undesired operation.

This equipment complies with FCC radiation exposure limits set forth for an uncontrolled environment. This equipment should be installed and operated with minimum distance 0cm between the radiator and your body.