Bluetooth module manual

1. Overview

The module BT-MOD TXW-BTM01 is designed with Zhuhai Jieli AC6926A.

1.1 AC6926A Peripheral Feature

One full speed USB 2.0 OTG controller
One audio interface supports IIS, left adjusted, right adjusted and DSP mode
Four multi-function 16-bit timers, support capture and PWM mode
Three 16-bit PWM generator for motor driving
One 16-bit active parallel port
One full-duplex basic UART
Two full-duplex advanced UART
One SPI interface supports host and device mode
Two SD Card Host controller
One IIC interface supports host and device mode
One SPDIF receiving interface without analog amplify
One Quadrate decoder
Watchdog
1 Crystal Oscillator
16-bit Stereo DAC with headphone amplifier, SNR >= 95dB
1 channel ADC , SNR >= 90dB
1 channel MIC amplifier
2 channels Stereo analog MUX
10 channels 10-bit ADC
2 channels 8 levels Low Voltage Detector
Power-on reset
Embedded PMU support low power mode

1.2 AC6926A Bluetooth Feature

CMOS single-chip fully-integrated radio and baseband
Compliant with Bluetooth V5.0+BR+EDR+BLE specification
Bluetooth Piconet and Scatternet support
Meet class2 and class3 transmitting power requirement
Support GFSK and π/4 DQPSK all paket types
Provides +2dbm transmitting power
receiver with -89dBm sensitivity
Support a2dp\avctp\avdtp\avrcp\hfp\spp\smp\att\gap\gatt\rfcomm\sdp\l2cap profile

1.3 AC6926A Power Supply

VBAT is 2.2V to 5.5V
VDDIO is 2.2V to 3.6V
RTCVDD is 2.2V to 3.6V

1.4 AC6926A Temperature

Operating temperature: -20℃ to +70℃
Storage temperature: -65℃ to +150℃

2. Pin Configuration and Functions

2.1 Module Pin Diagram

Module schematic

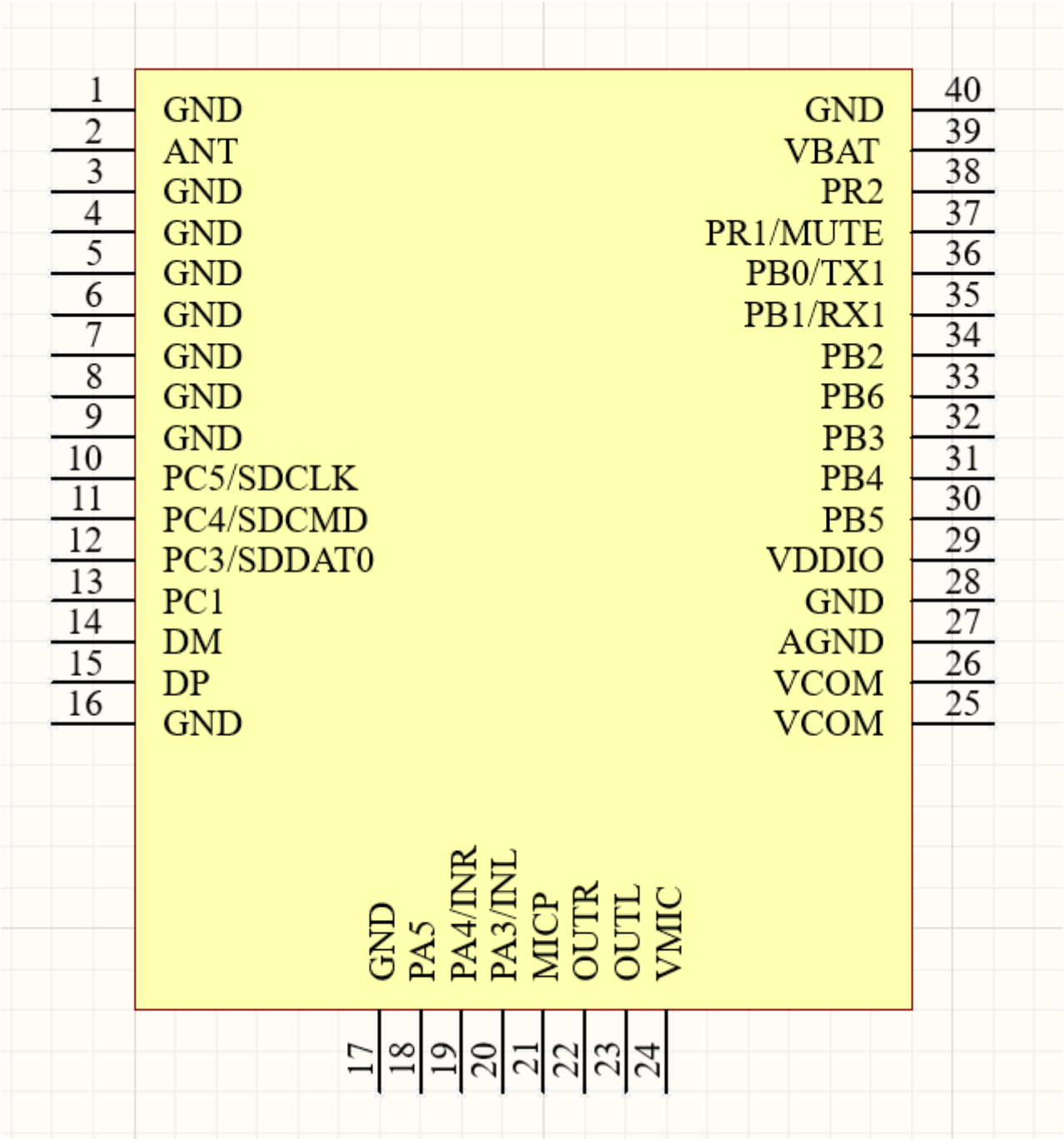

Module layout

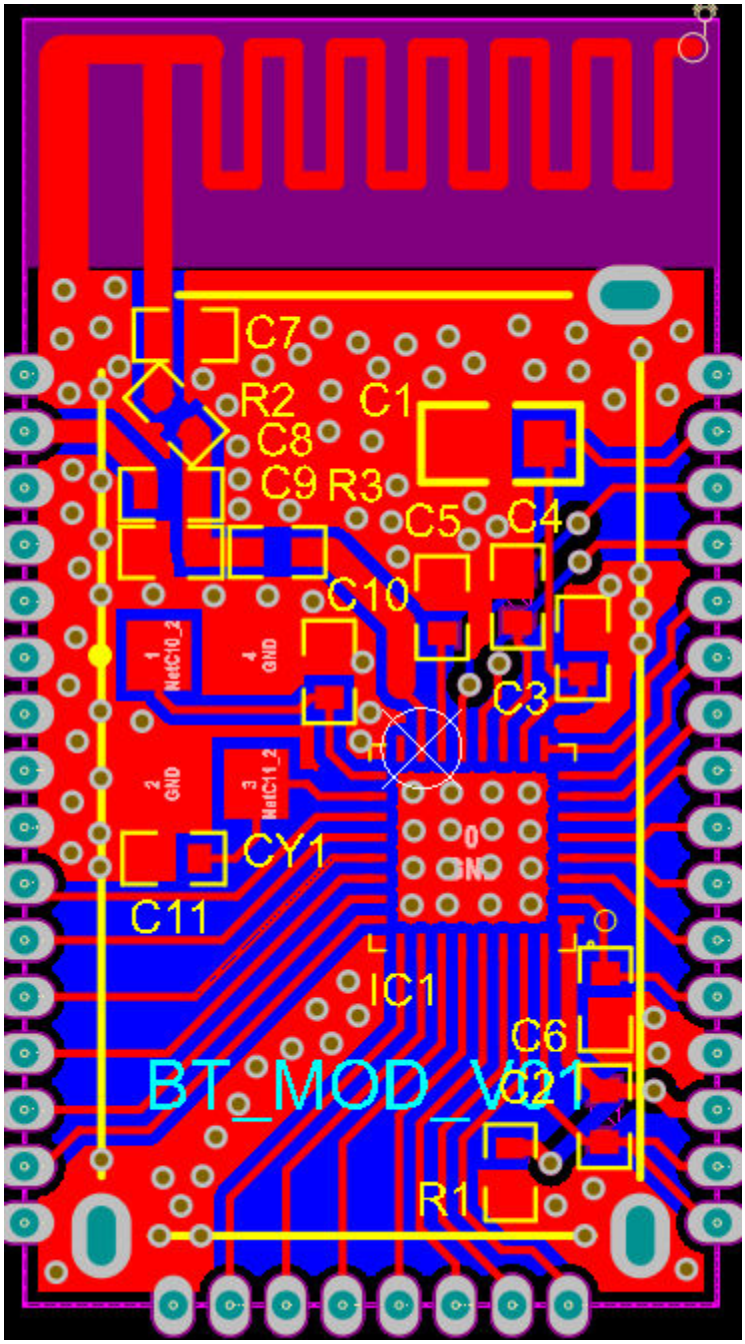

Module Package Information

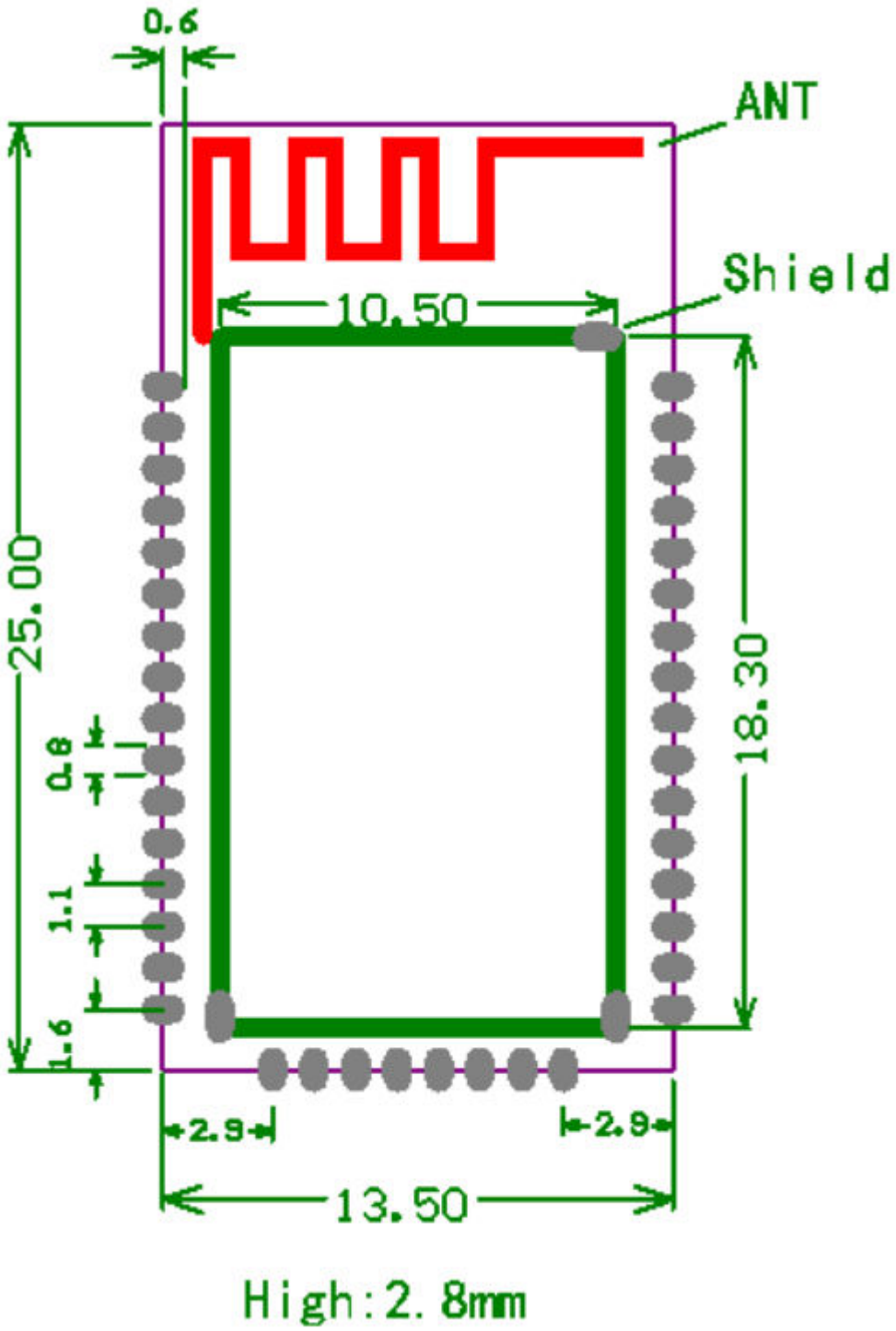

2.2 AC6926A Pin Functions

Table 1-1 AC6926A_QFN32 Pin Description

PIN NO.	Name	I/O Type	High Drive (mA)	Function	Other Function
1	DACVSS	P	/	Ground	
2	VDDIO	P	/	IO Power 3.3v	
3	PB5	I/O	8	GPIO	UART0TXB：Uart0 Data Out(B); AMUX0R：Simulator Channel0 Right; SPI1DOA：SPI1 Data Out(A); SD0CLKB：SD0 Clock(B); ADC9：ADC Input Channel 9; Touch5：Touch Input Channel 5;
4	PB4	I/O	8	GPIO	PWM3：Timer3 PWM Output; AMUX0L：Simulator Channel0 Left; SPI1CLKA：SPI1 Clock(A); SD0CMDB：SD0 Command(B); ADC8：ADC Input Channel 8; SPI0_DAT2AB(2)：SPI0 Data2(AB); Touch4：Touch Input Channel 4;
5	PB3	I/O	8	GPIO	PWM2：Timer2 PWM Output; UART2RXC：Uart2 Data In(C); SPI1DIA：SPI1 Data In(A); SD0DAT0B：SD0 Data0(B); AMUX2R：Simulator Channel2 Right; SPI0_DAT3AB(3)：SPI0 Data3(AB); Touch3：Touch Input Channel 3;
6	PB6	I/O	8	GPIO	AMUX2L：Simulator Channel2 Left; SPI0_DIB(1)：SPI0 Data In(B); Touch6：Touch Input Channel 6;
7	PB2	I/O	8	GPIO	UART2TXC：Uart2 Data Out(C); SPI2DIA：SPI2 Data In(A); SPI0_CLKB：SPI0 Clock(B); Touch2：Touch Input Channel 2;
8	PB1	I/O	8	GPIO	TMR2：Timer2 Clock Input; UART1RXA：Uart1 Data In(A); SPI2DOA：SPI2 Data Out(A); ADC7：ADC Input Channel 7; Touch1：Touch Input Channel 1;
9	PB0	I/O	8	GPIO	PWMH2L

					SPI2CLKA：SPI2 Clock(A); UART1TXA：Uart1 Data Out(A); ADC6：ADC Input Channel 6; Touch0：Touch Input Channel 0;
10	VBAT	P	/	LDO Power	
11	RTCVDD	P	/	RTC Power 3.3v	
12	PR1	I/O	10	RTCIO1 (output 0V)	RESET1： ADC12：ADC Input Channel 12;
13	PR2	I/O	10	RTCIO2 (pull up)	RESET2： ADC12：ADC Input Channel 12;
14	BT_AVDD	P	/	BT Power 1.3v	
15	BT_RF	P	/		
16	FMIP	I	/		
17	BT_OSCI	I	/	BT OSC In	
18	BT_OSCO	O	/	BT OSC Out	
19	PC5	I/O	24	GPIO	PWMH1L SD1CLKA：SD1 Clock(A); SPI1DOB：SPI1 Data Out(B); UART2RXD：Uart2 Data In(B); IIC_SDA_B：IIC SDA(B);
20	PC4	I/O	24	GPIO	SD1CMDA：SD1 Command(A); SPI1CLKB：SPI1 Clock(B); UART2TXD：Uart2 Data Out(B); IIC_SCL_B：IIC SCL(B);
21	PC3	I/O	24	GPIO	SD1DAT0A：SD1 Data0(A); SPI1DIB：SPI1 Data In(B); UART0RXC：Uart0 Data In(C); TMR3：Timer3 Clock Input; ADC10：ADC Input Channel 10;
22	PC1	I/O	24	GPIO	PWMH1H UART1RXB：Uart1 Data In(B);
23	USBDM	I/O	4	USB Negative Data (pull down)	UART1RXD：Uart1 Data In(D); ADC11：ADC Input Channel 11;
24	USBDP	I/O	4	USB Positive Data (pull down)	UART1TXD：Uart1 Data Out(D);
25	PA5	I/O	24	GPIO	ADC2：ADC Input Channel 2; Touch12：Touch Input Channel 12;
26	PA4	I/O	24	GPIO	PWM1：Timer1 PWM Output; AMUX1R：Simulator Channel1 Right; ADC1：ADC Input Channel 1; UART2RXA：Uart2 Data In(A);

3. Electrical Characteristics

3.1 PMU Characteristics

Symbol	Parameter	Min	Typ	Max	Unit	Test Conditions
VBAT	Voltage Input	2.2	3.7	5.5	V	
$V_{3.3}$	Voltage output	_	3.3	_	V	LDO5V = 5V, 100mA loading
$V_{1.2}$		_	1.2	_	V	LDO5V = 5V, 50mA loading
$V_{1.3}$	Voltage output		1.3		V	LDO5V=5V, 100mA loading
V_{DACVDD}	DAC Voltage	_	3.1	_	V	LDO5V = 5V, 10mA loading
$I_{L3.3}$	Loading current	_	_	150	mA	LDO5V = 5V

3.2 IO Input/Output Electrical Logical Characteristics

IO input characteristics						
Symbol	**Parameter**	**Min**	**Typ**	**Max**	**Unit**	**Test Conditions**
V_{IL}	Low-Level Input Voltage	-0.3	_	0.3* VDDIO	V	VDDIO = 3.3V
V_{IH}	High-Level Input Voltage	0.7* VDDIO	_	VDDIO+0.3	V	VDDIO = 3.3V
IO output characteristics						
V_{OL}	Low-Level Output Voltage	_	_	0.33	V	VDDIO = 3.3V
V_{OH}	High-Level Output Voltage	2.7	_	_	V	VDDIO = 3.3V

3.3 Internal Resistor Characteristics

Port	General Output	High Drive	Internal Pull-Up Resistor	Internal Pull-Down Resistor	Comment
PA0 PA3~PA5 PC1 PC3~PC5	8mA	24mA	10K	10K	1、USBDM & USBDP default pull down 2、internal pull-up/pull-down resistance | accuracy ±20% 3、PR1 default output 0 4、PR2 default pull up
PB0~PB6	4mA	8mA	10K	10K	
PR1 PR2	8mA	10mA	10K	10K	
USBDM USBDP	4mA	_	1.5K	15K	

3.4 DAC Characteristics

Parameter	Min	Typ	Max	Unit	Test Conditions
Frequency Response	20	_	20K	Hz	1KHz/0dB 10Kohm loading With A-Weighted Filter
THD+N	_	-69	_	dB	
S/N	_	95	_	dB	
Crosstalk	_	-80	_	dB	
Output Swing		1		Vrms	
Dynamic Range		90		dB	1KHz/-60dB 10Kohm loading With A-Weighted Filter
DAC Output Power	11		_	mW	32ohm loading

3.5 ADC Characteristics

Parameter	Min	Typ	Max	Unit	Test Conditions
Dynamic Range		85		dB	1KHz/-60dB 10Kohm loading With A-Weighted Filter
S/N	_	90	_	dB	1KHz/-60dB 10Kohm loading With A-Weighted Filter
THD+N	_	-72	_	dB	
Crosstalk	_	-80	_	dB	

3.6 BT Characteristics

3.6.1 Transmitter

Basic Data Rate

Parameter		Min	Typ	Max	Unit	Test Conditions
RF Transmit Power			0	4	dBm	25℃, Power Supply Voltage=5V 2441MHz
RF Power Control Range			20		dB	
20dB Bandwidth			950		KHz	
Adjacent Channel Transmit Power	+2MHz		-40		dBm	
	-2MHz		-38		dBm	
	+3MHz		-44		dBm	
	-3MHz		-35		dBm	

Enhanced Data Rate

Parameter		Min	Typ	Max	Unit	Test Conditions
Relative Power			1.2		dB	25℃, Power Supply Voltage=5V 2441MHz
π/4 DQPSK Modulation Accuracy	DEVM RMS		6		%	
	DEVM 99%		10		%	
	DEVM Peak		15		%	
Adjacent Channel Transmit Power	+2MHz		-40		dBm	
	-2MHz		-38		dBm	
	+3MHz		-44		dBm	
	-3MHz		-35		dBm	

3.6.2 Receiver

Basic Data Rate

Parameter		Min	Typ	Max	Unit	Test Conditions
Sensitivity			-89		dBm	25℃, Power Supply Voltage=5V 2441MHz
Co-channel Interference Rejection			-13		dB	
Adjacent Channel Interference Rejection	+1MHz		+5		dB	
	-1MHz		+2		dB	
	+2MHz		+37		dB	
	-2MHz		+36		dB	
	+3MHz		+40		dB	
	-3MHz		+35		dB	

Enhanced Data Rate

Parameter		Min	Typ	Max	Unit	Test Conditions
Sensitivity			-89		dBm	25℃, Power Supply Voltage=5V 2441MHz
Co-channel Interference Rejection			-13		dB	
Adjacent Channel Interference Rejection	+1MHz		+5		dB	
	-1MHz		+2		dB	
	+2MHz		+37		dB	
	-2MHz		+36		dB	
	+3MHz		+40		dB	
	-3MHz		+35		dB	

Integration instructions for host product manufactures according to KDB 996369 D03
OEM Manual v01
2.2 List of applicable FCC rules

FCC Part 15 Subpart C 15.247

2.3 Specific operational use conditions

The module is a Bluetooth module with BT3.0& BLE function.

BLE Specification：

Operation Frequency: 2402~2480MHz

Number of Channel: 40

Modulation: GFSK

Type:PCB Antenna

Gain: 0 dBi

BT3.0 Specification：

Operation Frequency: 2402~2480MHz

Number of Channel: 79

Modulation: GFSK, π/4-DQPSK

Type:PCB Antenna

Gain: 0 dBi

The module can be used for mobile or applications with a maximum antenna. The

host manufacturer

installing this module into their product must ensure that the final composit product

complies with the

FCC requirements by a technical assessment or evaluation to the FCC rules,

including the transmitter

operaition. The host manufacturer has to be aware not to provide information to the end user

regarding how to install or remove this RF module in the user's manual of the end product which

integrates this module. The end user manual shall include all required regulatory information/warning

as show in this manual.

2.4 Limited module procedures

Not applicable.

2.5 Trace antenna designs

Not applicable. The module has its own antenna, and doesn’t need a host’s printed board microstrip trace

antenna etc.

2.6 RF exposure considerations

The module must be installed in the host equipment such that at least 20cm is maintained between the

antenna and users’ body; and if RF exposure statement or module layout is changed, then the host

product manufacturer required to take responsibility of the module through a change in FCC ID or new

application. The FCC ID of the module cannot be used on the final product. In these circumstances, the

host manufacturer will be responsible for re-evaluating the end product (including the transmitter) andobtaining a separate FCC authorization.

2.7 Antennas

This device is intended only for host manufacturers under the following conditions:

The transmitter

module may not be co-located with any other transmitter or antenna; The module

shall be only used

with the internal antenna(s) that has been originally tested and certified with this

module. The antenna

must be either permanently attached or employ a ‘unique’ antenna coupler. As long

as the conditions

above are met, further transmitter test will not be required. However, the host

manufacturer is still

responsible for testing their end-product for any additional compliance requirements

required with this

module installed (for example, digital device emissions, PC peripheral requirements,

etc. Antenna

Specification are as follows:

BT：

Type:PCB Antenna

Gain: 0 dBi

Model: TXW-BTM01

Manufacturer: Zhejiang Tongxinwei Intelligence Technology Co., Ltd.

2.8 Label and compliance information

Host product manufacturers need to provide a physical or e-label stating “Contains Transmitter

Module FCC ID: 2BKVU-TXW-BTM01” with their finished product.

2.9 Information on test modes and additional testing requirements

BT3.0 Operation Frequency: 2402~2480MHz

Number of Channel: 79

Modulation: GFSK, π/4-DQPSK

BLE Operation Frequency: 2402~2480MHz

Number of Channel: 40

Modulation: GFSK

Host manufacturer must perfom test of radiated & conducted emission and spurious emission, etc

according to the actual test modes for a stand-alone modular transmitter in a host, as well as for

multiple simultaneously transmitting modules or other transmitters in a host product. Only when all the

test results of test modes comply with FCC requirements, then the end product can be sold legally.

2.10 Additional testing, Part 15 Subpart B disclaimer

The modular transmitter is only FCC authorized for FCC Part 15 Subpart C 15.247 and that the host

product manufacturer is responsible for compliance to any other FCC rules that apply to the host not

covered by the modular transmitter grant of certification. If the grantee markets their product as being

Part 15 Subpart B compliant (when it also contains unintentional radiator digital circuity), then the

grantee shall provide a notice stating that the final host product still requires Part 15 Subpart B

compliance testing with the modular transmitter installed.

Application:

Bluetooth speaker, massage chair, computer, scooter and so on.

It supports customer secondary development and use.

FCC WARNING

This device complies with part 15 of the FCC Rules. Operation is subject to the following two conditions: (1) this device may not cause harmful interference, and (2) this device must accept any interference received, including interference that may cause undesired operation.

Any changes or modifications not expressly approved by the party responsible for compliance could void the user's authority to operate the equipment.

NOTE: This equipment has been tested and found to comply with the limits for a Class B digital device, pursuant to Part 15 of the FCC Rules. These limits are designed to provide reasonable protection against harmful interference in a residential installation. This equipment generates, uses and can radiate radio frequency energy and, if not installed and used in accordance with the instructions, may cause harmful interference to radio communications. However, there is no guarantee that interference will not occur in a particular installation.

If this equipment does cause harmful interference to radio or television reception,

which can be determined by turning the equipment off and on, the user is encouraged to try to correct the interference by one or more of the following measures:

-- Reorient or relocate the receiving antenna.

-- Increase the separation between the equipment and receiver.

-- Connect the equipment into an outlet on a circuit different

from that to which the receiver is connected.

-- Consult the dealer or an experienced radio/TV technician for help.

To maintain compliance with FCC’s RF Exposure guidelines, This equipment should be installed and operated with minimum distance between 20cm the radiator your body: Use only the supplied antenna.