SPEAKERS AT4 WIRELESS TRANSMITTER

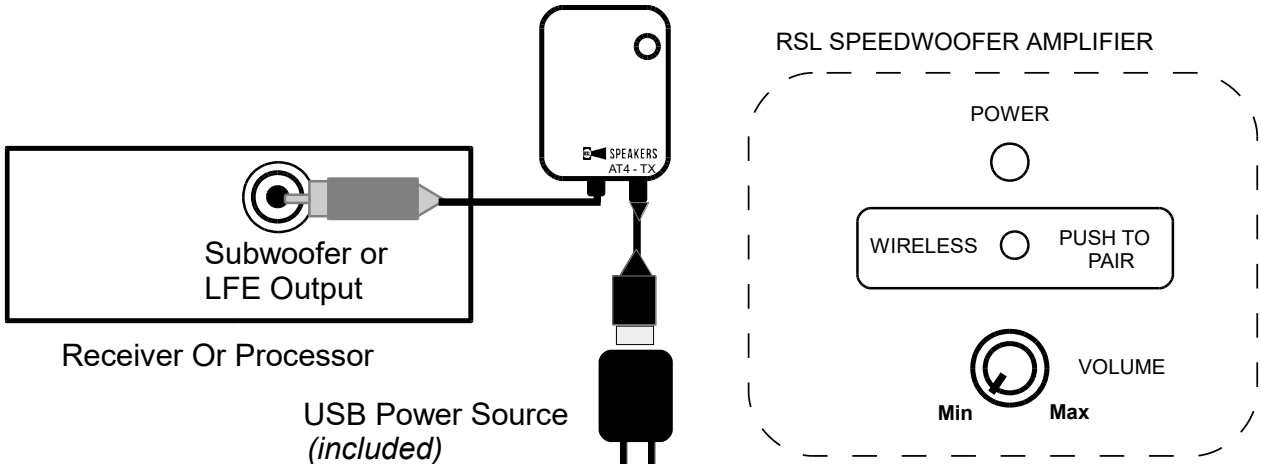

Your new AT4 Transmitter lets you send audio wirelessly to a receiver built-in to the Speedwoofer or separate AT4 Receiver. A wireless connection can be handy when it's difficult to run a RCA cable to your subwoofer. Another benefit is that it makes it very easy to experiment placing your Speedwoofer in different areas of your room when looking to fully optimize your system.

The RSL AT4 Wireless Audio Transmitter has a range up to 50 ft. The first time you setup the AT4 for wireless use, you will need to pair it with a Speedwoofer or matching AT4 receiver unit. You should only need to do this once.

Connecting Your Subwoofer Wirelessly

1. Plug the Speedwoofer in to a wall outlet and turn on the power.
2. Connect the AT4 to an output from your A/V receiver, processor, integrated amplifier, or pre-amplifier. Use either the included mono or stereo RCA cable.
3. Connect the transmitter to a USB power source. **Please use the included USB wall adapter or an independent power source. If you use your Audio/Video receiver or other A/V component as a USB power source, you may experience unwanted noise or interference.**
4. The light on the transmitter will flash slowly. Push and hold the transmitter's pairing button until it flashes rapidly and then release the button.
5. Immediately while it is flashing rapidly, press and hold the pairing button on the Speedwoofer for 3-5 seconds and release it. Do not hold the pairing button any longer than 5 seconds. The transmitter light should display solid blue.
6. Your Speedwoofer is now paired.
7. If the transmitter light begins to flash slowly, repeat the above procedure. If pairing still fails, temporarily place the AT4 transmitter closer to the Speedwoofer and away from other Wi-Fi devices. The transmitter does not need an audio connection in order to pair it.

Please Note: Solid objects such as walls, cabinet doors, etc. can degrade the wireless signal. Its signal can also be affected by interference from other wireless networks or nearby electronic devices that emit wireless signals.

For further assistance, please email us at sales@rslspeakers.com or call us at 800-905-5485.

FCC Warnings

Any Changes or modifications not expressly approved by the party responsible for compliance could void the user's authority to operate the equipment.

Note: This equipment has been tested and found to comply with the limits for a Class B digital device, pursuant to part 15 of the FCC Rules. These limits are designed to provide reasonable protection against harmful interference in a residential installation. This equipment generates uses and can radiate radio frequency energy and, if not installed and used in accordance with the instructions, may cause harmful interference to radio communications. However, there is no guarantee that interference will not occur in a particular installation. If this equipment does cause harmful interference to radio or television reception, which can be determined by turning the equipment off and on, the user is encouraged to try to correct the interference by one or more of the following measures:

-Reorient or relocate the receiving antenna.
-Increase the separation between the equipment and receiver.
-Connect the equipment into an outlet on a circuit different from that to which the receiver is connected.
-Consult the dealer or an experienced radio/TV technician for help.

This device complies with part 15 of the FCC Rules. Operation is subject to the following two conditions:
(1) This device may not cause harmful interference, and (2) this device must accept any interference received, including interference that may cause undesired operation.
This equipment complies with FCC radiation exposure limits set forth for an uncontrolled environment.
This equipment should be installed and operated with minimum distance 20cm between the radiator & your body.