5. 隔离度测试数据（Isolation Test Data）

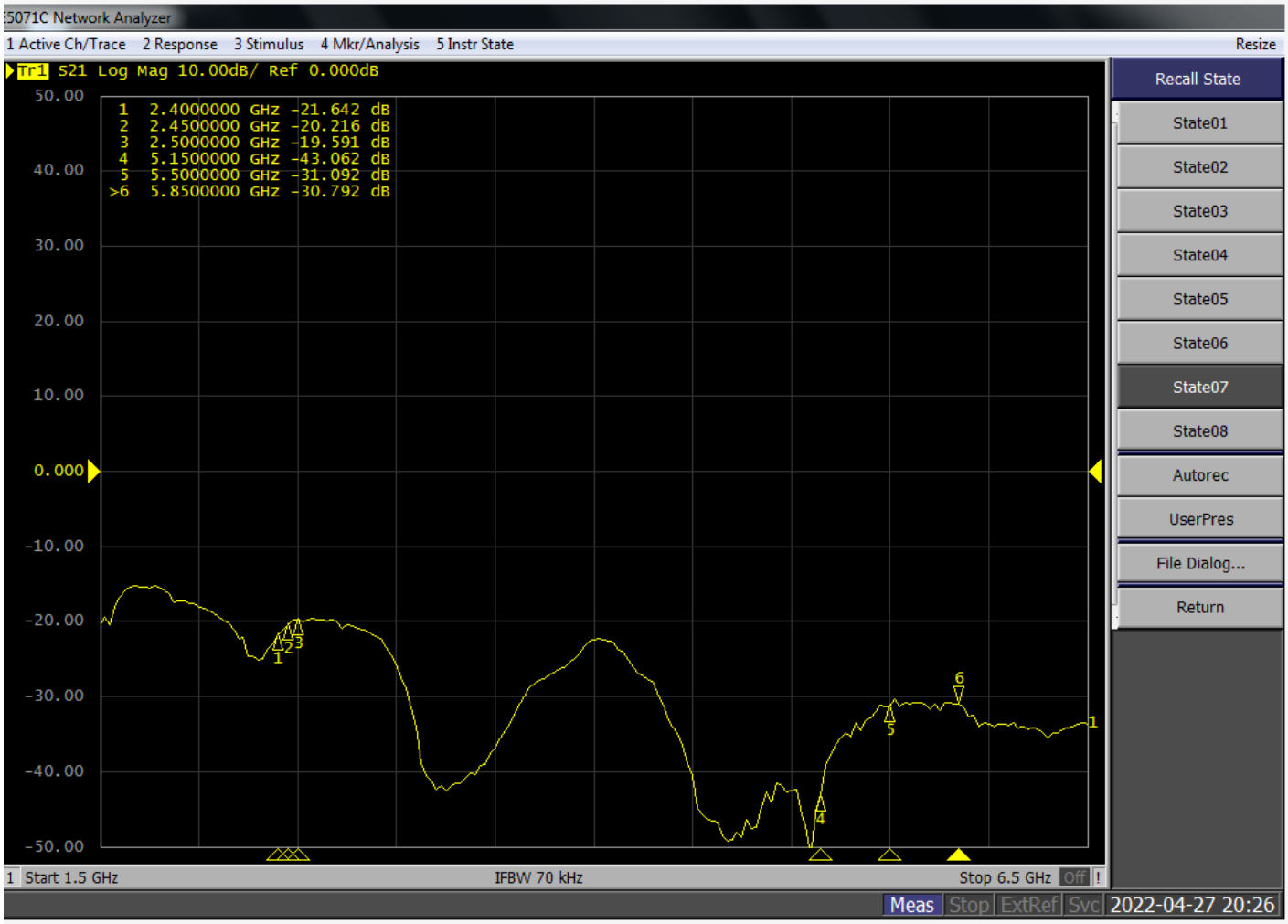

HF	☐
RoHS	■
REACH	☐
CONFIDENTIAL	

SIGN	DATE	DESCRIPTION	APPROVER
B			
C			
D			

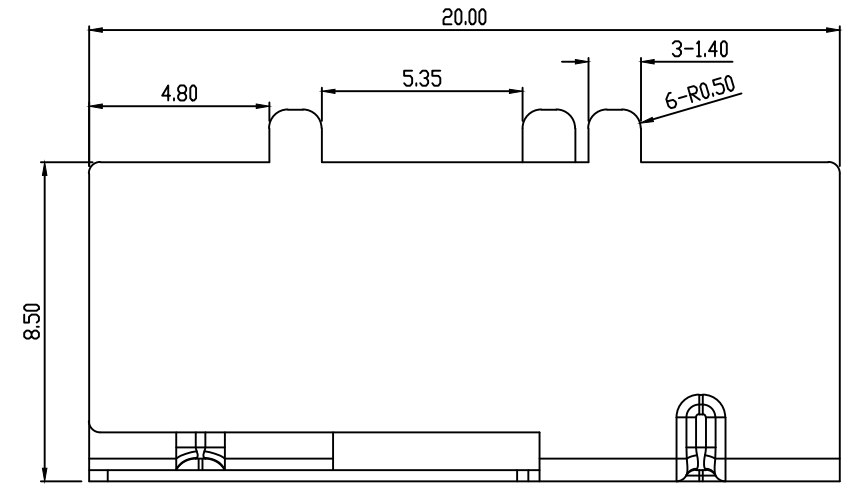

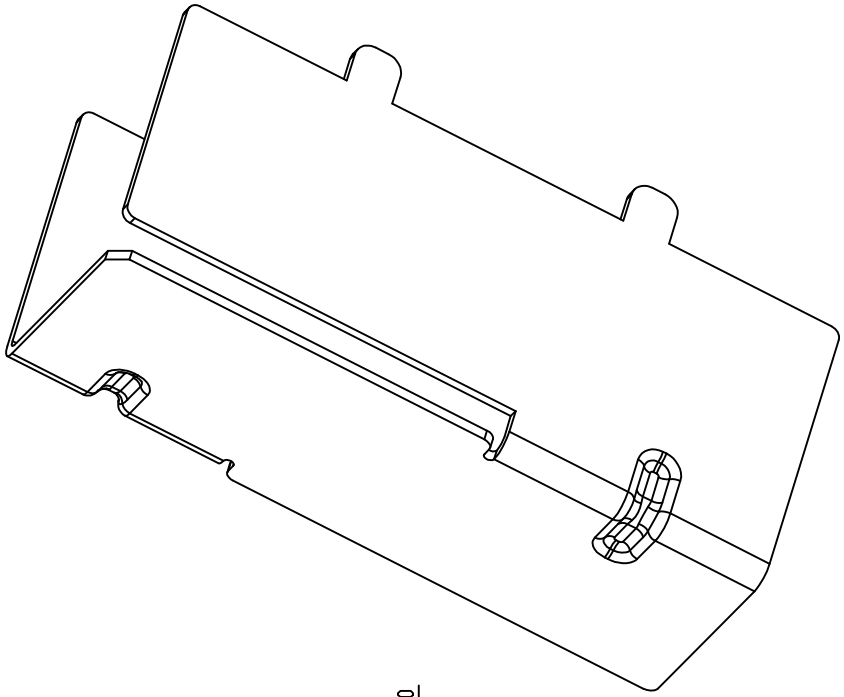

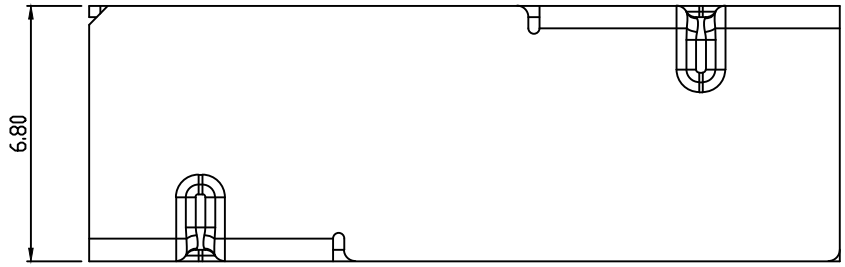

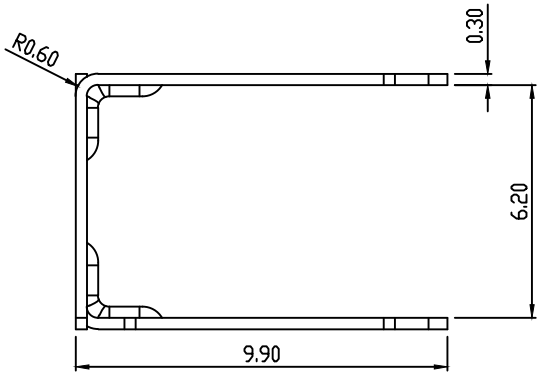

技术要求:
1. 材质为不锈钢.
2. 颜色为镀镍.

信博联 SINBOLIN 东莞市信博联电子科技有限公司

TITLE: U形金属片DV9187-WIFIA			CUSTOMER P/N: /	
PART NO.: JSP-2006803-09BN				Standard Tolerance
APP BY	CHK BY	RF BY	DES BY	X.X ±0.2 ○ 0.02
				X.XX ±0.1 ◎ 0.03
				X° ±1 ▱ 0.05
City 2022/04/27	Yixin 2022/04/27		YJH 2022/04/27	UNITS: mm // 0.03
				SCALE: 1/1 ⊥ 0.05
				REVISION: A ⌯ 0.05

產品包裝規範

PACKING CRITERION

Date: 2022/04/27

Part Number : JSP-2006803-09BN	Revision : A
Name: U形金属片DV9187-WIFIA	Customer :

一. WITH THE ANT INTO THE PE BAG

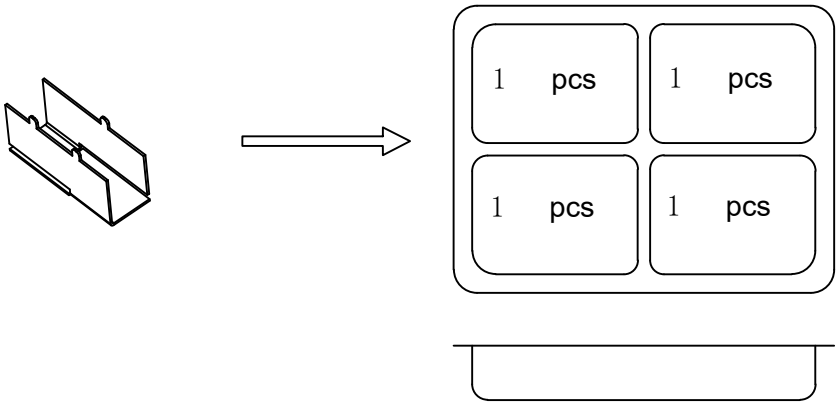

二. PACKING

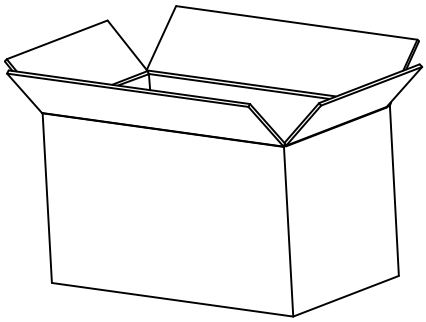

16000PCS/CARTON

为

三. SEALING

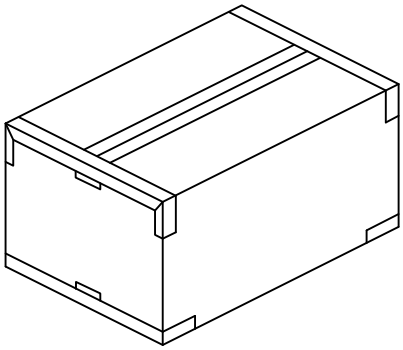

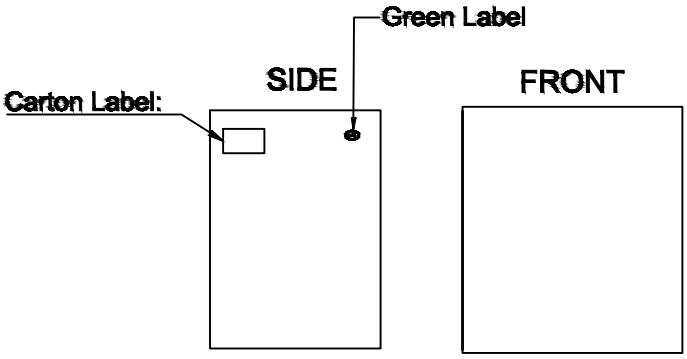

APPROVED BY : City CHECKED BY : Yixin DESIGNED BY : YJH

测试报告

No. CANEC2200074016　　日期: 2022年01月10日　第1页,共6页

佛山市资海不锈钢有限公司

佛山市南海区大沥镇九龙不锈钢交易中心北H座101、102号铺
佛山市宝艺不锈钢有限公司
佛山市南海区狮山镇工业大道8号

以下测试之样品是由申请者所提供及确认：不锈钢卷板(SUS304)

SGS工作编号：	CP21-068017 - GZ
样品接收日期：	2022年01月04日
测试周期：	2022年01月04日 - 2022年01月10日
测试要求：	根据客户要求测试
测试方法：	请参见下一页
测试结果：	请参见下一页
结论：	基于所送样品进行的测试，镉、铅、汞、六价铬、多溴联苯(PBBs)、多溴二苯醚(PBDEs)、邻苯二甲酸酯（如邻苯二甲酸二丁酯 (DBP)、邻苯二甲酸丁苄酯(BBP)、邻苯二甲酸二(2-乙基已基)酯(DEHP)和邻苯二甲酸二异丁酯(DIBP)）的测试结果符合欧盟RoHS指令2011/65/EU附录II的修正指令(EU) 2015/863的限值要求。

通标标准技术服务有限公司广州分公司
授权签名

scan to see the report

ACFC1A7D

陈江梨

Allie Chen陈江梨
批准签署人

Unless otherwise agreed in writing, this document is issued by the Company subject to its General Conditions of Service printed overleaf, available on request or accessible at http://www.sgs.com/en/Terms-and-Conditions.aspx and, for electronic format documents, subject to Terms and Conditions for Electronic Documents at http://www.sgs.com/en/Terms-and-Conditions/Terms-e-Document.aspx. Attention is drawn to the limitation of liability, indemnification and jurisdiction issues defined therein. Any holder of this document is advised that information contained hereon reflects the Company's findings at the time of its intervention only and within the limits of Client's instructions, if any. The Company's sole responsibility is to its Client and this document does not exonerate parties to a transaction from exercising all their rights and obligations under the transaction documents. This document cannot be reproduced except in full, without prior written approval of the Company. Any unauthorized alteration, forgery or falsification of the content or appearance of this document is unlawful and offenders may be prosecuted to the fullest extent of the law. Unless otherwise stated the results shown in this test report refer only to the sample(s) tested .
Attention: To check the authenticity of testing /inspection report & certificate, please contact us at telephone: (86-755) 8307 1443, or email: CN.Doccheck@sgs.com

SGS-CSTC Standards Technical Services Co., Ltd. Guangzhou Branch Testing Center Chemical Laboratory.
198 Kezhu Road,Scientech Park Guangzhou Economic & Technology Development District,Guangzhou,China 510663　t (86-20) 82155555　www.sgsgroup.com.cn
中国·广州·经济技术开发区科学城科珠路198号　邮编: 510663　t (86-20) 82155555　sgs.china@sgs.com

测试结果 :

测试样品描述 :

样品编号	SGS样品ID	描述
SN1	CAN22-000740.005	银色金属

备注 :

(1) 1 mg/kg = 0.0001%

(2) MDL = 方法检测限

(3) ND = 未检出 (< MDL)

(4) "-" = 未规定

RoHS指令2011/65/EU附录II的修正指令(EU) 2015/863

测试方法 : 参考IEC 62321-4:2013+A1:2017 , IEC 62321-5:2013, IEC 62321-7-1:2015 , IEC 62321-6:2015 和 IEC 62321-8:2017, 采用 ICP-OES , UV-Vis 和 GC-MS 进行分析。

测试项目	限值	单位	MDL	*005*
镉 (Cd)	100	mg/kg	2	ND
铅 (Pb)	1,000	mg/kg	2	ND
汞 (Hg)	1,000	mg/kg	2	ND
六价铬(Cr(VI))▾	-	μg/cm²	0.10	ND
多溴联苯之和(PBBs)	1,000	mg/kg	-	ND
一溴联苯	-	mg/kg	5	ND
二溴联苯	-	mg/kg	5	ND
三溴联苯	-	mg/kg	5	ND
四溴联苯	-	mg/kg	5	ND
五溴联苯	-	mg/kg	5	ND
六溴联苯	-	mg/kg	5	ND
七溴联苯	-	mg/kg	5	ND
八溴联苯	-	mg/kg	5	ND
九溴联苯	-	mg/kg	5	ND
十溴联苯	-	mg/kg	5	ND
多溴二苯醚之和(PBDEs)	1,000	mg/kg	-	ND
一溴二苯醚	-	mg/kg	5	ND
二溴二苯醚	-	mg/kg	5	ND
三溴二苯醚	-	mg/kg	5	ND
四溴二苯醚	-	mg/kg	5	ND
五溴二苯醚	-	mg/kg	5	ND

SGS-CSTC Standards Technical Services Co., Ltd. Guangzhou Branch Testing Center Chemical Laboratory.

Unless otherwise agreed in writing, this document is issued by the Company subject to its General Conditions of Service printed overleaf, available on request or accessible at http://www.sgs.com/en/Terms-and-Conditions.aspx and, for electronic format documents, subject to Terms and Conditions for Electronic Documents at http://www.sgs.com/en/Terms-and-Conditions/Terms-e-Document.aspx. Attention is drawn to the limitation of liability, indemnification and jurisdiction issues defined therein. Any holder of this document is advised that information contained hereon reflects the Company's findings at the time of its intervention only and within the limits of Client's instructions, if any. The Company's sole responsibility is to its Client and this document does not exonerate parties to a transaction from exercising all their rights and obligations under the transaction documents. This document cannot be reproduced except in full, without prior written approval of the Company. Any unauthorized alteration, forgery or falsification of the content or appearance of this document is unlawful and offenders may be prosecuted to the fullest extent of the law. Unless otherwise stated the results shown in this test report refer only to the sample(s) tested .

Attention: To check the authenticity of testing /inspection report & certificate, please contact us at telephone: (86-755) 8307 1443, or email: CN.Doccheck@sgs.com

198 Kezhu Road,Scientech Park Guangzhou Economic & Technology Development District,Guangzhou,China 510663 t (86-20) 82155555 www.sgsgroup.com.cn

中国 ·广州 ·经济技术开发区科学城科珠路198号 邮编: 510663 t (86-20) 82155555 sgs.china@sgs.com

Member of the SGS Group (SGS SA)

测试项目	限值	单位	MDL	005
六溴二苯醚	-	mg/kg	5	ND
七溴二苯醚	-	mg/kg	5	ND
八溴二苯醚	-	mg/kg	5	ND
九溴二苯醚	-	mg/kg	5	ND
十溴二苯醚	-	mg/kg	5	ND
邻苯二甲酸二丁酯 (DBP)	1000	mg/kg	50	ND
邻苯二甲酸丁苄酯(BBP)	1000	mg/kg	50	ND
邻苯二甲酸二(2-乙基已基)酯(DEHP)	1000	mg/kg	50	ND
邻苯二甲酸二异丁酯(DIBP)	1000	mg/kg	50	ND

备注：

(1)最大允许极限值引用自RoHS指令(EU) 2015/863 。

(2) IEC 62321系列等同于 EN 62321系列

https://www.cenelec.eu/dyn/www/f?p=104:30:1742232870351101::::FSP_ORG_ID,FSP_LANG_ID:1258637,25

(3) ▾=a. 当六价铬的浓度高于0.13 μg/cm²时，样品为阳性，即含有六价铬；

b. 当六价铬的浓度为ND(低于0.10 μg/cm²)时，样品为阴性，即未检测到六价铬；

c. 当六价铬的浓度介于0.10 μg/cm²与0.13 μg/cm²之间时，无法直接判定是否检测到六价铬，因不同个体的样品表面差异可能会影响测定结果；

由于未获知样品的存储条件和生产日期，样品的六价铬测试结果仅能代表测试时样品含六价铬的状态。

除非另有说明，此报告结果仅对测试的样品负责。本报告未经本公司书面许可，不可部分复制。检测报告仅用于客户科研、教学、内部质量控制、产品研发等目的，仅供内部参考。

Unless otherwise agreed in writing, this document is issued by the Company subject to its General Conditions of Service printed overleaf, available on request or accessible at http://www.sgs.com/en/Terms-and-Conditions.aspx and, for electronic format documents, subject to Terms and Conditions for Electronic Documents at http://www.sgs.com/en/Terms-and-Conditions/Terms-e-Document.aspx. Attention is drawn to the limitation of liability, indemnification and jurisdiction issues defined therein. Any holder of this document is advised that information contained hereon reflects the Company's findings at the time of its intervention only and within the limits of Client's instructions, if any. The Company's sole responsibility is to its Client and this document does not exonerate parties to a transaction from exercising all their rights and obligations under the transaction documents. This document cannot be reproduced except in full, without prior written approval of the Company. Any unauthorized alteration, forgery or falsification of the content or appearance of this document is unlawful and offenders may be prosecuted to the fullest extent of the law. Unless otherwise stated the results shown in this test report refer only to the sample(s) tested .

Attention: To check the authenticity of testing /inspection report & certificate, please contact us at telephone: (86-755) 8307 1443, or email: CN.Doccheck@sgs.com

SGS-CSTC Standards Technical Services Co., Ltd. Guangzhou Branch Testing Center Chemical Laboratory.

198 Kezhu Road,Scientech Park Guangzhou Economic & Technology Development District,Guangzhou,China 510663 t (86-20) 82155555 www.sgsgroup.com.cn

中国·广州·经济技术开发区科学城科珠路198号 邮编: 510663 t (86-20) 82155555 sgs.china@sgs.com

Member of the SGS Group (SGS SA)

附件

Pb/Cd/Hg/Cr^{6+}/PBBs/PBDEs 测试流程图

1）样品按照下述流程被完全消解（六价铬和多溴联苯/多溴二苯醚测试除外）。

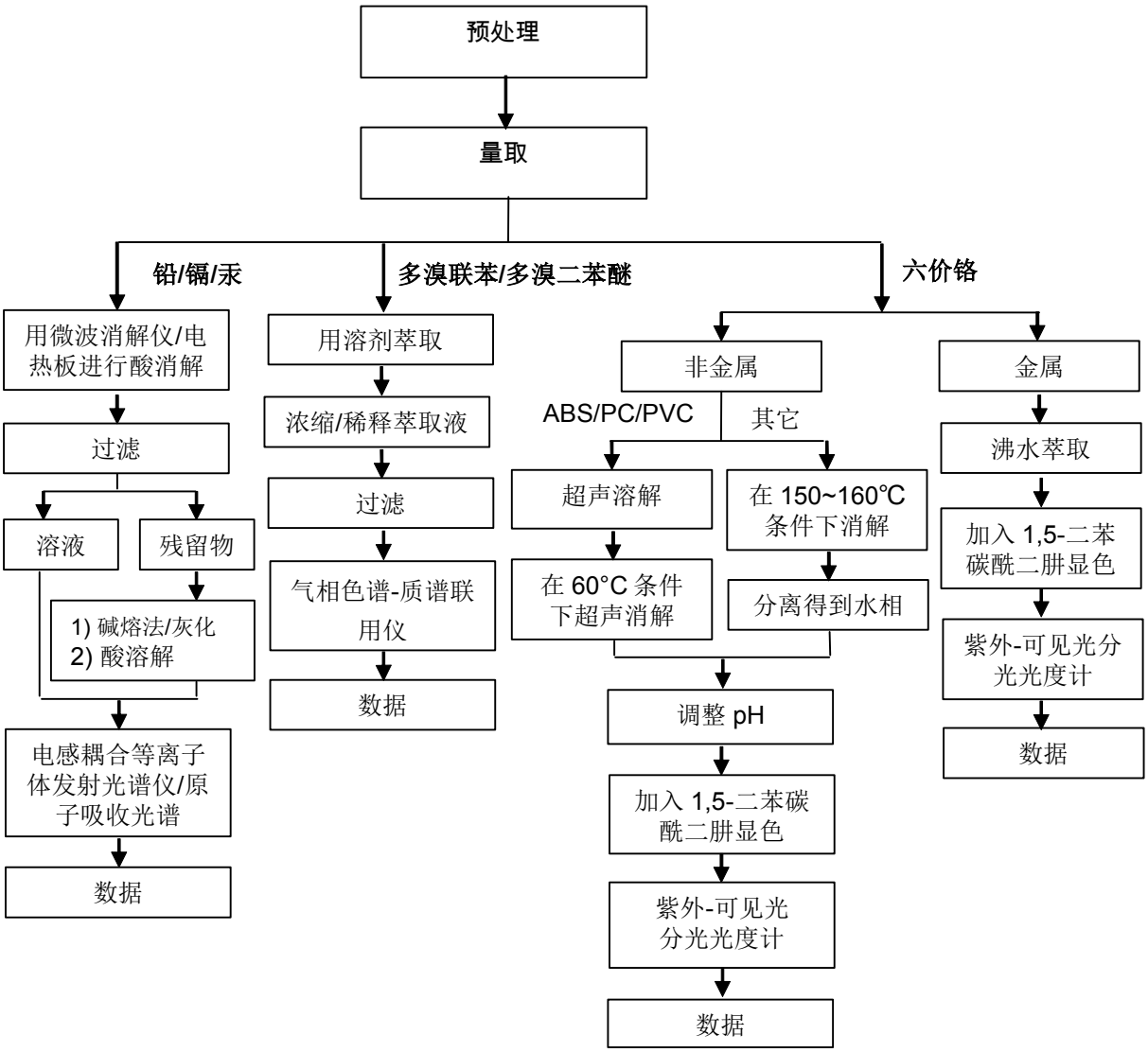

Unless otherwise agreed in writing, this document is issued by the Company subject to its General Conditions of Service printed overleaf, available on request or accessible at http://www.sgs.com/en/Terms-and-Conditions.aspx and, for electronic format documents, subject to Terms and Conditions for Electronic Documents at http://www.sgs.com/en/Terms-and-Conditions/Terms-e-Document.aspx. Attention is drawn to the limitation of liability, indemnification and jurisdiction issues defined therein. Any holder of this document is advised that information contained hereon reflects the Company's findings at the time of its intervention only and within the limits of Client's instructions, if any. The Company's sole responsibility is to its Client and this document does not exonerate parties to a transaction from exercising all their rights and obligations under the transaction documents. This document cannot be reproduced except in full, without prior written approval of the Company. Any unauthorized alteration, forgery or falsification of the content or appearance of this document is unlawful and offenders may be prosecuted to the fullest extent of the law. Unless otherwise stated the results shown in this test report refer only to the sample(s) tested .
Attention: To check the authenticity of testing /inspection report & certificate, please contact us at telephone: (86-755) 8307 1443, or email: CN.Doccheck@sgs.com
SGS-CSTC Standards Technical Services Co., Ltd. Guangzhou Branch Testing Center Chemical Laboratory.
198 Kezhu Road,Scientech Park Guangzhou Economic & Technology Development District,Guangzhou,China 510663 t (86-20) 82155555 www.sgsgroup.com.cn
中国·广州·经济技术开发区科学城科珠路198号 邮编: 510663 t (86-20) 82155555 sgs.china@sgs.com
Member of the SGS Group (SGS SA)

附件

Phthalates 测试流程图

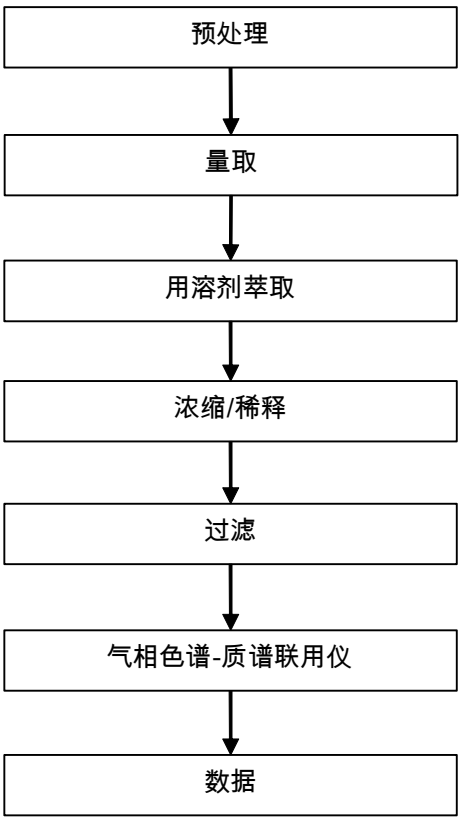

Unless otherwise agreed in writing, this document is issued by the Company subject to its General Conditions of Service printed overleaf, available on request or accessible at http://www.sgs.com/en/Terms-and-Conditions.aspx and, for electronic format documents, subject to Terms and Conditions for Electronic Documents at http://www.sgs.com/en/Terms-and-Conditions/Terms-e-Document.aspx. Attention is drawn to the limitation of liability, indemnification and jurisdiction issues defined therein. Any holder of this document is advised that information contained hereon reflects the Company's findings at the time of its intervention only and within the limits of Client's instructions, if any. The Company's sole responsibility is to its Client and this document does not exonerate parties to a transaction from exercising all their rights and obligations under the transaction documents. This document cannot be reproduced except in full, without prior written approval of the Company. Any unauthorized alteration, forgery or falsification of the content or appearance of this document is unlawful and offenders may be prosecuted to the fullest extent of the law. Unless otherwise stated the results shown in this test report refer only to the sample(s) tested .
Attention: To check the authenticity of testing /inspection report & certificate, please contact us at telephone: (86-755) 8307 1443, or email: CN.Doccheck@sgs.com
SGS-CSTC Standards Technical Services Co., Ltd. Guangzhou Branch Testing Center Chemical Laboratory
198 Kezhu Road,Scientech Park Guangzhou Economic & Technology Development District,Guangzhou,China 510663 t (86-20) 82155555 www.sgsgroup.com.cn
中国·广州·经济技术开发区科学城科珠路198号 邮编: 510663 t (86-20) 82155555 sgs.china@sgs.com
Member of the SGS Group (SGS SA)

样品照片:

CAN22-000740.005

此照片仅限于随SGS正本报告使用

*** 报告完 ***

Unless otherwise agreed in writing, this document is issued by the Company subject to its General Conditions of Service printed overleaf, available on request or accessible at http://www.sgs.com/en/Terms-and-Conditions.aspx and, for electronic format documents, subject to Terms and Conditions for Electronic Documents at http://www.sgs.com/en/Terms-and-Conditions/Terms-e-Document.aspx. Attention is drawn to the limitation of liability, indemnification and jurisdiction issues defined therein. Any holder of this document is advised that information contained hereon reflects the Company's findings at the time of its intervention only and within the limits of Client's instructions, if any. The Company's sole responsibility is to its Client and this document does not exonerate parties to a transaction from exercising all their rights and obligations under the transaction documents. This document cannot be reproduced except in full, without prior written approval of the Company. Any unauthorized alteration, forgery or falsification of the content or appearance of this document is unlawful and offenders may be prosecuted to the fullest extent of the law. Unless otherwise stated the results shown in this test report refer only to the sample(s) tested .
Attention: To check the authenticity of testing /inspection report & certificate, please contact us at telephone: (86-755) 8307 1443, or email: CN.Doccheck@sgs.com

SGS-CSTC Standards Technical Services Co., Ltd. Guangzhou Branch Testing Center Chemical Laboratory.
198 Kezhu Road,Scientech Park Guangzhou Economic & Technology Development District,Guangzhou,China 510663 t (86-20) 82155555 www.sgsgroup.com.cn
中国·广州·经济技术开发区科学城科珠路198号 邮编: 510663 t (86-20) 82155555 sgs.china@sgs.com

Member of the SGS Group (SGS SA)