FCC Part 15C Test Report
FCC ID: 2BKXF-SZ080

Applicant:	Dongguan shengbei electronic technology co., ltd
Address:	Room 204, Building 1, Delta Industrial Park, No.2 Beiyuan Street, Chang 'an Town, Dongguan City, Guangdong Province
Manufacturer:	Dongguan shengbei electronic technology co., ltd
Address:	Room 204, Building 1, Delta Industrial Park, No.2 Beiyuan Street, Chang 'an Town, Dongguan City, Guangdong Province
Product Name:	Ai Hu telescopic lock ring
Trade Mark:	N/A
Model Number:	SZ080
Date of Receipt:	Jun. 26, 2026
Test Date:	Jun. 26, 2026 – Jul. 13, 2026
Date of Report:	Jul. 13, 2026
Prepared By:	Shenzhen DL Testing Technology Co., Ltd.
Address:	101-201, Comprehensive Building, Tongzhou Electronics Longgang Factory Area, No.1 Baolong Fifth Road, Baolong Community, Baolong Street, Longgang District, Shenzhen, China
Applicable Standards:	FCC PART 15 C 15.247 A ANSI C63.10-2020 + Cor. 1-2023+C63.10a-2024 + Errata to C63.10a-2024
Test Result:	Pass
Report Number:	DLE-260707004R

Prepared (Test Engineer):	Ken Tan
Reviewer (Supervisor):	Jack Bu
Approved (Manager):	Jade Yang

This test report is based on a single evaluation of one sample of above mentioned products. It is not permitted to be duplicated in extracts without written approval of Shenzhen DL Testing Technology Co., Ltd.

Table of Contents Page

1 . SUMMARY OF TEST RESULTS 4
1.1 MEASUREMENT UNCERTAINTY 4
2 . GENERAL INFORMATION 5
2.1 GENERAL DESCRIPTION OF EUT 5
2.2 DESCRIPTION OF TEST MODES 6
2.3 BLOCK DIGRAM SHOWING THE CONFIGURATION OF SYSTEM TESTED 6
2.4 DESCRIPTION OF SUPPORT UNITS(CONDUCTED MODE) 7
2.5 TABLE OF PARAMETERS OF TEST SOFTWARE SETTING 7
2.6 EQUIPMENTS LIST FOR ALL TEST ITEMS 8
3 . EMC EMISSION TEST 9
3.1 CONDUCTED EMISSION MEASUREMENT 9
3.1.1 POWER LINE CONDUCTED EMISSION LIMITS 9
3.1.2 TEST PROCEDURE 9
3.1.3 DEVIATION FROM TEST STANDARD 9
3.1.4 TEST SETUP 10
3.1.5 EUT OPERATING CONDITIONS 10
3.1.6 TEST RESULTS 10
3.2 RADIATED EMISSION MEASUREMENT 13
3.2.1 RADIATED EMISSION LIMITS 13
3.2.2 TEST PROCEDURE 14
3.2.3 DEVIATION FROM TEST STANDARD 14
3.2.4 TEST SETUP 14
3.2.5 EUT OPERATING CONDITIONS 15
3.2.6 TEST RESULTS (BETWEEN 9KHZ – 30 MHZ) 16
3.2.7 TEST RESULTS (BETWEEN 30MHZ – 1GHZ) 17
3.2.8 TEST RESULTS (1GHZ~25GHZ) 19
3.3 RADIATED BAND EMISSION MEASUREMENT 20
3.3.1 TEST REQUIREMENT: 20
3.3.2 TEST PROCEDURE 20
3.3.3 DEVIATION FROM TEST STANDARD 20
3.3.4 TEST SETUP 21
3.3.5 EUT OPERATING CONDITIONS 21
4 . PEAK OUTPUT POWER 25
4.1 APPLIED PROCEDURES / LIMIT 25
4.1.1 TEST PROCEDURE 25
4.1.2 DEVIATION FROM STANDARD 25
4.1.3 TEST SETUP 25
4.1.4 EUT OPERATION CONDITIONS 25

Table of Contents **Page**

4.1.5 TEST RESULTS 25

5 . POWER SPECTRAL DENSITY TEST 26

5.1 APPLIED PROCEDURES / LIMIT 26

5.1.1 TEST PROCEDURE 26

5.1.2 DEVIATION FROM STANDARD 26

5.1.3 TEST SETUP 26

5.1.4 EUT OPERATION CONDITIONS 26

5.1.5 TEST RESULTS 26

6 . 6DB BANDWIDTH TEST 27

6.1 APPLIED PROCEDURES / LIMIT 27

6.1.1 TEST PROCEDURE 27

6.1.2 DEVIATION FROM STANDARD 27

6.1.3 TEST SETUP 27

6.1.4 EUT OPERATION CONDITIONS 27

6.1.5 TEST RESULTS 27

7 . ANTENNA REQUIREMENT 28

7.1 STANDARD REQUIREMENT 28

7.2 EUT ANTENNA 28

8 . TEST SETUP PHOTO 28

9 . EUT PHOTO 28

1. SUMMARY OF TEST RESULTS

Test procedures according to the technical standards:

FCC Part15 (15.247) , Subpart C			
Standard Section	Test Item	Judgment	Remark
15.207	Conducted Emission	PASS	
15.247(c)	Radiated Spurious Emission	PASS	
15.205	Band Edge Emission	PASS	
15.247(b)(1)	Peak Output Power	PASS	
15.247(a)(2)	6dB Bandwidth	PASS	
15.247(d)	Power Spectral Density	PASS	
15.203	Antenna Requirement	PASS	

NOTE:

(1)" N/A" denotes test is not applicable in this Test Report

Test lab: Shenzhen DL Testing Technology Co., Ltd.

Address: 101-201, Comprehensive Building, Tongzhou Electronics Longgang Factory Area, No.1 Baolong Fifth Road, Baolong Community, Baolong Street, Longgang District, Shenzhen, China

FCC Test Firm Registration Number: 854456
Designation Number: CN1307
IC Registered No.: 27485
CAB ID.: CN0118

1.1 MEASUREMENT UNCERTAINTY

The reported uncertainty of measurement **y** ± **U**, where expended uncertainty **U** is based on a standard uncertainty multiplied by a coverage factor of **k=2**，providing a level of confidence of approximately **95** %。

No.	Item	Uncertainty
1	Conducted Emission Test	±2.56dB
2	RF power,conducted	±0.42dB
3	Spurious emissions,conducted	±2.76dB
4	All emissions,radiated(<1G)	±3.65dB
5	All emissions,radiated(>1G)	±4.89dB
6	Temperature	±0.5°C
7	Humidity	±2%
8	6dB Bandwidth	±0.2MHz
9	Power Spectral Density	±0.3dBm

2. GENERAL INFORMATION

2.1 GENERAL DESCRIPTION OF EUT

Product Name:	Ai Hu telescopic lock ring
Trademark	N/A
Model No.:	SZ080
Model Difference	N/A
Operation Frequency:	2402~2480MHz
Channel numbers:	40 Channels
Channel separation:	2MHz
Modulation technology:	GFSK
Antenna Type:	Internal Antenna
Antenna gain:	0dBi
Power supply:	DC 3.7V from battery DC 5V from charge

Note:
1.For a more detailed features description, please refer to the manufacturer's specifications or the User's Manual.
2.The EUT's all information provided by client.

2. Channel Lis

Channel List					
Channel	Frequency (MHz)	Channel	Frequency (MHz)	Channel	Frequency (MHz)
00	2402	14	2430	28	2458
01	2404	15	2432	29	2460
02	2406	16	2434	30	2462
03	2408	17	2436	31	2464
04	2410	18	2438	32	2466
05	2412	19	2440	33	2468
06	2414	20	2442	34	2470
07	2416	21	2444	35	2472
08	2418	22	2446	36	2474
09	2420	23	2448	37	2476
10	2422	24	2450	38	2478
11	2424	25	2452	39	2480
12	2426	26	2454		
13	2428	27	2456		

2.2 DESCRIPTION OF TEST MODES

To investigate the maximum EMI emission characteristics generates from EUT, the test system was pre-scanning tested base on the consideration of following EUT operation mode or test configuration mode which possible have effect on EMI emission level. Each of these EUT operation mode(s) or test configuration mode(s) mentioned above was evaluated respectively.

Pretest Mode	Modulation	Channel
Mode 1	GFSK	CH00
Mode 2		CH19
Mode 3		CH39

Note: (1) The measurements are performed at the highest, middle, lowest available channels.
(2) For the two items of conducted disturbance at the power supply end and space radiation below 1GHz, all modes have undergone pre-tests. The report only shows the worst test results of mode 3.

2.3 BLOCK DIGRAM SHOWING THE CONFIGURATION OF SYSTEM TESTED

Radiated Spurious Emission Test

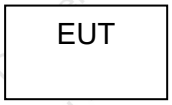

Power Line Conducted Emission Test

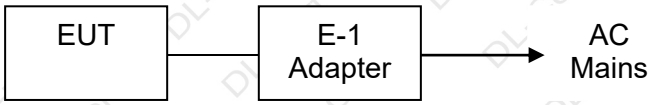

2.4 DESCRIPTION OF SUPPORT UNITS(CONDUCTED MODE)

The EUT has been tested as an independent unit together with other necessary accessories or support units. The following support units or accessories were used to form a representative test configuration during the tests.

Item	Equipment	Model/Type No.	Series No.	Note
E-1	Adapter	HW-0501000E	N/A	XIAOMI

Item	Shielded Type	Ferrite Core	Length	Note

Note:

(1) For detachable type I/O cable should be specified the length in cm in『Length』column.

2.5 TABLE OF PARAMETERS OF TEST SOFTWARE SETTING

During testing, channel & power controlling software provided by the customer was used to control the operating channel as well as the output power level. The RF output power selection is for the setting of RF output power expected by the customer and is going to be fixed on the end product.

Test software Version	Test program: Bluetooth RF Test Tool		
Frequency	2402 MHz	2440MHz	2480 MHz
Power Setting of Softwave	10	10	10

2.6 EQUIPMENTS LIST FOR ALL TEST ITEMS

Radiation test, Band-edge test and 20db bandwidth test equipment

Item	Equipment	Manufacturer	Type No.	Serial No.	Last calibration	Calibrated until
1	Spectrum Analyzer (9kHz-26.5GHz)	Agilent	E4408B	MY50140780	Oct. 25, 2025	Oct. 24, 2026
2	Test Receiver (9kHz-7GHz)	R&S	ESRP7	101393	Oct. 25, 2025	Oct. 24, 2026
3	Bilog Antenna (30MHz-1GHz)	R&S	VULB9162	00306	Oct. 25, 2025	Oct. 24, 2026
4	Horn Antenna (1GHz-18GHz)	Schwarzbeck	BBHA9120D	02139	Oct. 26, 2025	Oct. 25, 2026
5	Horn Antenna (18GHz-40GHz)	A.H. Systems	SAS-574	588	Oct. 25, 2025	Oct. 24, 2026
6	Amplifier (9KHz-6GHz)	Schwarzbeck	BBV9743B	00153	Oct. 25, 2025	Oct. 24, 2026
7	Amplifier (1GHz-18GHz)	EMEC	EM01G8GA	00270	Oct. 25, 2025	Oct. 24, 2026
8	Amplifier (18GHz-40GHz)	Quanjuda	DLE-161	97	Oct. 25, 2025	Oct. 24, 2026
9	Loop Antenna (9KHz-30MHz)	Schwarzbeck	FMZB1519B	00014	Oct. 25, 2025	Oct. 24, 2026
10	RF cables1 (9kHz-1GHz)	ChengYu	966	004	Oct. 25, 2025	Oct. 24, 2026
11	RF cables2 (1GHz-40GHz)	ChengYu	966	003	Oct. 25, 2025	Oct. 24, 2026
12	Antenna connector	Florida RF Labs	N/A	RF 01#	Oct. 25, 2025	Oct. 24, 2026
13	Power probe	KEYSIGHT	U2021XA	MY55210018	Oct. 25, 2025	Oct. 24, 2026
14	Signal Analyzer 9kHz-26.5GHz	Agilent	N9020A	MY55370280	Oct. 25, 2025	Oct. 24, 2026
15	Test Receiver 20kHz-40GHz	R&S	ESU 40	100376	Oct. 25, 2025	Oct. 24, 2026
16	D.C. Power Supply	LongWei	PS-305D	010964729	Oct. 25, 2025	Oct. 24, 2026
17	Temperature & humidity chamber	Changfeng	CF-150-40-P	CF170802-01	Oct. 25, 2025	Oct. 24, 2026
18	966 chamber	YIHENG	966 Room	966	Nov. 06, 2023	Nov. 05, 2026

Conduction Test equipment

Item	Equipment	Manufacturer	Type No.	Serial No.	Last calibration	Calibrated until
1	843 Shielded Room	ChengYu	843 Room	843	Nov. 05, 2023	Nov. 04, 2026
2	EMI Receiver	R&S	ESR	101421	Oct. 25, 2025	Oct. 24, 2026
3	LISN	R&S	ENV216	102417	Oct. 25, 2025	Oct. 24, 2026
4	843 Cable 1#	ChengYu	CE Cable	001	Oct. 25, 2025	Oct. 24, 2026

Other

Item	Name	Manufacturer	Model	Software version
1	EMC Conduction Test System	FALA	EZ_EMC	EMC-CON 3A1.1
2	EMC radiation test system	FALA	EZ_EMC	FA-03A2
3	RF test system	MAIWEI	MTS8310	2.0.0.0
4	RF communication test system	MAIWEI	MTS8200	2.0.0.0

3. EMC EMISSION TEST

3.1 CONDUCTED EMISSION MEASUREMENT

3.1.1 POWER LINE CONDUCTED EMISSION Limits (Frequency Range 150KHz-30MHz)

FREQUENCY (MHz)	Limit (dBuV)		Standard
	Quasi-peak	Average	
0.15 -0.5	66 - 56 *	56 - 46 *	FCC
0.50 -5.0	56.00	46.00	FCC
5.0 -30.0	60.00	50.00	FCC

Note:

(1) The tighter limit applies at the band edges.

(2) The limit of " * " marked band means the limitation decreases linearly with the logarithm of the frequency in the range.

The following table is the setting of the receiver

Receiver Parameters	Setting
Attenuation	10 dB
Start Frequency	0.15 MHz
Stop Frequency	30 MHz
IF Bandwidth	9 kHz

3.1.2 TEST PROCEDURE

a. The EUT was placed 0.8 meters from the horizontal ground plane with EUT being connected to the power mains through a line impedance stabilization network (LISN). All other support equipments powered from additional LISN(s). The LISN provide 50 Ohm/ 50uH of coupling impedance for the measuring instrument.

b. Interconnecting cables that hang closer than 40 cm to the ground plane shall be folded back and forth in the center forming a bundle 30 to 40 cm long.

c. I/O cables that are not connected to a peripheral shall be bundled in the center. The end of the cable may be terminated, if required, using the correct terminating impedance. The overall length shall not exceed 1 m.

d. LISN at least 80 cm from nearest part of EUT chassis.

e. For the actual test configuration, please refer to the related Item –EUT Test Photos.

3.1.3 DEVIATION FROM TEST STANDARD

No deviation

3.1.4 TEST SETUP

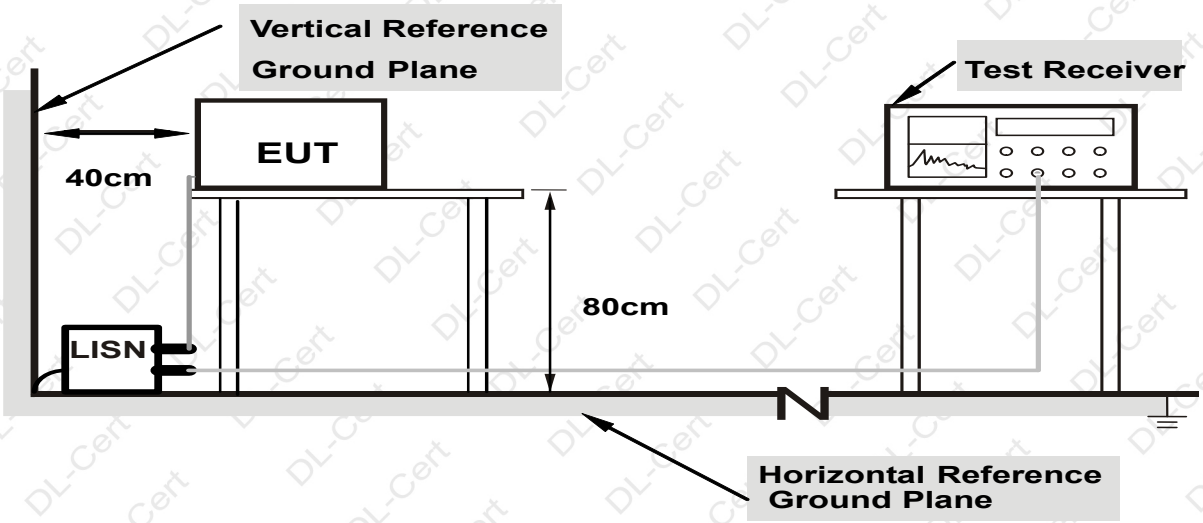

Note: 1.Support units were connected to second LISN.
2.Both of LISNs (AMN) are 80 cm from EUT and at least 80 cm from other units and other metal planes

3.1.5 EUT OPERATING CONDITIONS

The EUT was configured for testing in a typical fashion (as a customer would normally use it). The EUT has been programmed to continuously transmit during test. This operating condition was tested and used to collect the included data.
We pretest AC 120V and AC 230V, the worst voltage was AC 120V and the data recording in the report.

3.1.6 TEST RESULTS

PASS
Please refer to the following page.

Temperature:	25 ℃	Relative Humidity:	54%
Pressure:	1010hPa	Phase :	L
Test Voltage :	AC 120V/60Hz	Test Mode:	Mode 3

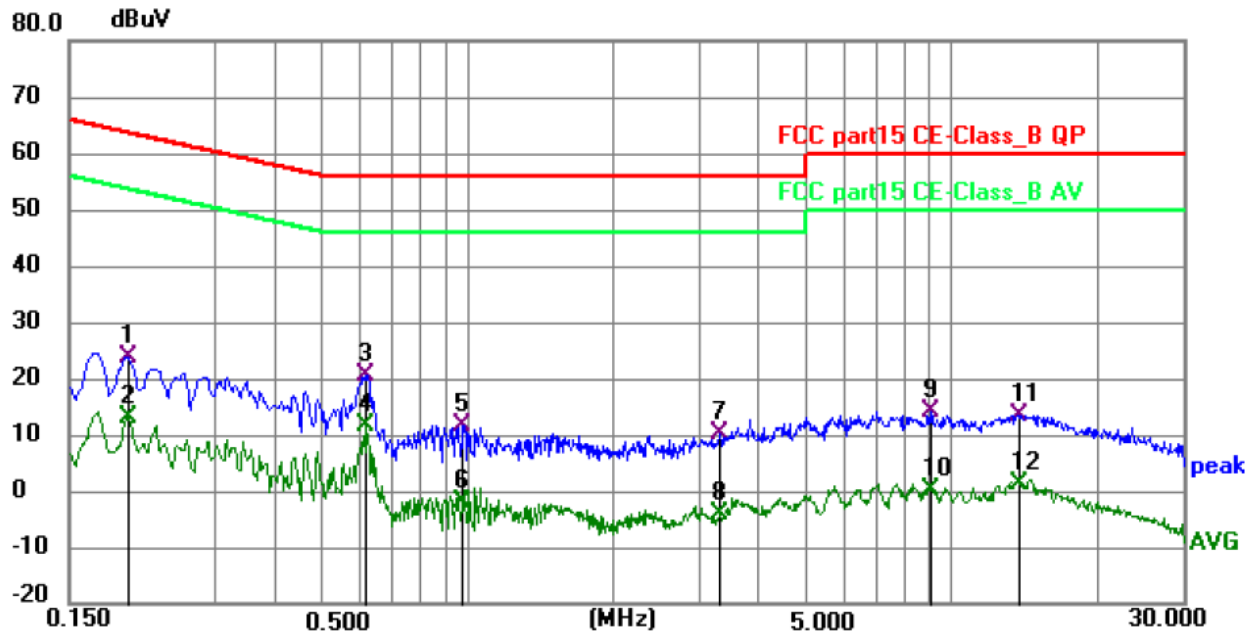

Remark:
Margin = Limit – Level, Correct Factor = Cable lose + LISN insertion loss, Level= Reading + Correct factor

No.	Frequency (MHz)	Reading (dBuV)	Factor (dB)	Level (dBuV)	Limit (dBuV)	Margin (dB)	Detector	P/F	Remark
1	0.1995	23.62	0.00	23.62	63.63	-40.01	QP	P	
2	0.1995	13.15	0.00	13.15	53.63	-40.48	AVG	P	
3	0.6180	20.62	0.00	20.62	56.00	-35.38	QP	P	
4 *	0.6180	11.44	0.00	11.44	46.00	-34.56	AVG	P	
5	0.9780	11.78	0.00	11.78	56.00	-44.22	QP	P	
6	0.9780	-1.82	0.00	-1.82	46.00	-47.82	AVG	P	
7	3.3225	10.15	0.00	10.15	56.00	-45.85	QP	P	
8	3.3225	-3.96	0.00	-3.96	46.00	-49.96	AVG	P	
9	9.0960	14.25	0.00	14.25	60.00	-45.75	QP	P	
10	9.0960	0.32	0.00	0.32	50.00	-49.68	AVG	P	
11	13.8030	13.56	0.00	13.56	60.00	-46.44	QP	P	
12	13.8030	1.25	0.00	1.25	50.00	-48.75	AVG	P	

Temperature:	25 ℃	Relative Humidity:	54%
Pressure:	1010hPa	Phase :	N
Test Voltage :	AC 120V/60Hz	Test Mode:	Mode 3

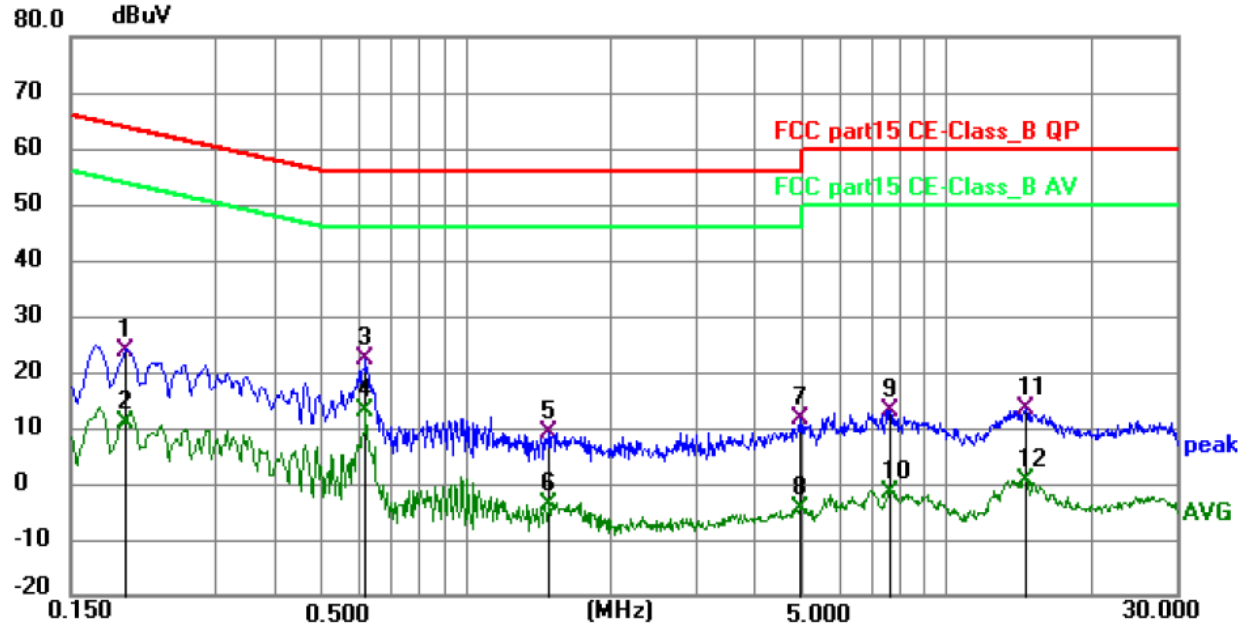

Remark:
Margin = Limit – Level, Correct Factor = Cable lose + LISN insertion loss, Level= Reading + Correct factor

No.	Frequency (MHz)	Reading (dBuV)	Factor (dB)	Level (dBuV)	Limit (dBuV)	Margin (dB)	Detector	P/F	Remark
1	0.1949	23.84	0.00	23.84	63.83	-39.99	QP	P	
2	0.1949	11.03	0.00	11.03	53.83	-42.80	AVG	P	
3	0.6180	22.34	0.00	22.34	56.00	-33.66	QP	P	
4 *	0.6180	12.87	0.00	12.87	46.00	-33.13	AVG	P	
5	1.4865	9.11	0.00	9.11	56.00	-46.89	QP	P	
6	1.4865	-3.90	0.00	-3.90	46.00	-49.90	AVG	P	
7	4.9380	11.47	0.00	11.47	56.00	-44.53	QP	P	
8	4.9380	-4.52	0.00	-4.52	46.00	-50.52	AVG	P	
9	7.6110	13.05	0.00	13.05	60.00	-46.95	QP	P	
10	7.6110	-1.54	0.00	-1.54	50.00	-51.54	AVG	P	
11	14.5500	13.52	0.00	13.52	60.00	-46.48	QP	P	
12	14.5500	0.61	0.00	0.61	50.00	-49.39	AVG	P	

3.2 RADIATED EMISSION MEASUREMENT

3.2.1 RADIATED EMISSION LIMITS (Frequency Range 9kHz-1000MHz)

In case the emission fall within the restricted band specified on 15.205(a), then the 15.209(a) limit in the table below has to be followed.

Frequencies (MHz)	Field Strength (micorvolts/meter)	Measurement Distance (meters)
0.009~0.490	2400/F(KHz)	300
0.490~1.705	24000/F(KHz)	30
1.705~30.0	30	30
30~88	100	3
88~216	150	3
216~960	200	3
Above 960	500	3

LIMITS OF RADIATED EMISSION MEASUREMENT (Above 1000MHz)

FREQUENCY (MHz)	Limit (dBuV/m) (at 3M)	
	PEAK	AVERAGE
Above 1000	74	54

Notes:

(1) The limit for radiated test was performed according to FCC PART 15C.

(2) The tighter limit applies at the band edges.

(3) Emission level (dBuV/m)=20log Emission level (uV/m).

Spectrum Parameter	Setting
Attenuation	Auto
Start Frequency	1000 MHz
Stop Frequency	25GHz
RB / VB (emission in restricted band)	1 MHz / 1 MHz for Peak, 1 MHz / 10Hz for Average

Receiver Parameter	Setting
Attenuation	Auto
Start ~ Stop Frequency	9kHz~150kHz / RB 200Hz for QP
Start ~ Stop Frequency	150kHz~30MHz / RB 9kHz for QP
Start ~ Stop Frequency	30MHz~1000MHz / RB 120kHz for QP

3.2.2 TEST PROCEDURE

Below 1GHz test procedure as below:

a. The EUT was placed on the top of a rotating table 0.8 meters above the ground at a 3 meter semi-anechoic camber. The table was rotated 360 degrees to determine the position of the highest radiation.
b. The EUT was set 3 meters away from the interference-receiving antenna, which was mounted on the top of a variable-height antenna tower.
c. The antenna height is varied from one meter to four meters above the ground to determine the maximum value of the field strength. Both horizontal and vertical polarizations of the antenna are set to make the measurement.
d. For each suspected emission, the EUT was arranged to its worst case and then the antenna was tuned to heights from 1 meter to 4 meters (for the test frequency of below 30MHz, the antenna was tuned to heights 1 meter) and the rotatable table was turned from 0 degrees to 360 degrees to find the maximum reading.
e. The test-receiver system was set to Peak Detect Function and Specified Bandwidth with Maximum Hold Mode.
f. If the emission level of the EUT in peak mode was 10dB lower than the limit specified, then testing could be stopped and the peak values of the EUT would be reported. Otherwise the emissions that did not have 10dB margin would be re-tested one by one using peak, quasi-peak or average method as specified and then reported in a data sheet.

Above 1GHz test procedure as below:

g. Different between above is the test site, change from Semi- Anechoic Chamber to fully Anechoic Chamber and change form table 0.8 metre to 1.5 metre.
h. Test the EUT in the lowest channel, the middle channel, the Highest channel

Note:
The horizontal and vertical polarities of the antenna were tested, and a pre-test was conducted on the EUT placement as three orthogonal axes X,Y,Z. The worst display of the test results was the Y-axis. The worst case emissions were reported.

3.2.3 DEVIATION FROM TEST STANDARD

No deviation

3.2.4 TEST SETUP

（A）Radiated Emission Test-Up Frequency Below 30MHz

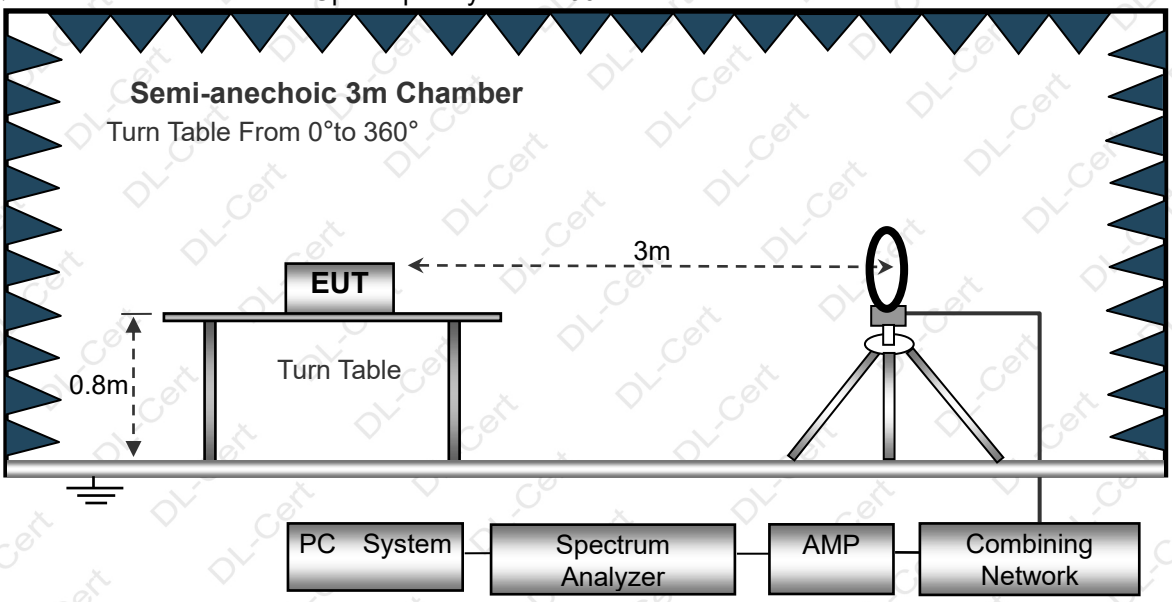

（B）Radiated Emission Test-Up Frequency 30MHz~1GHz

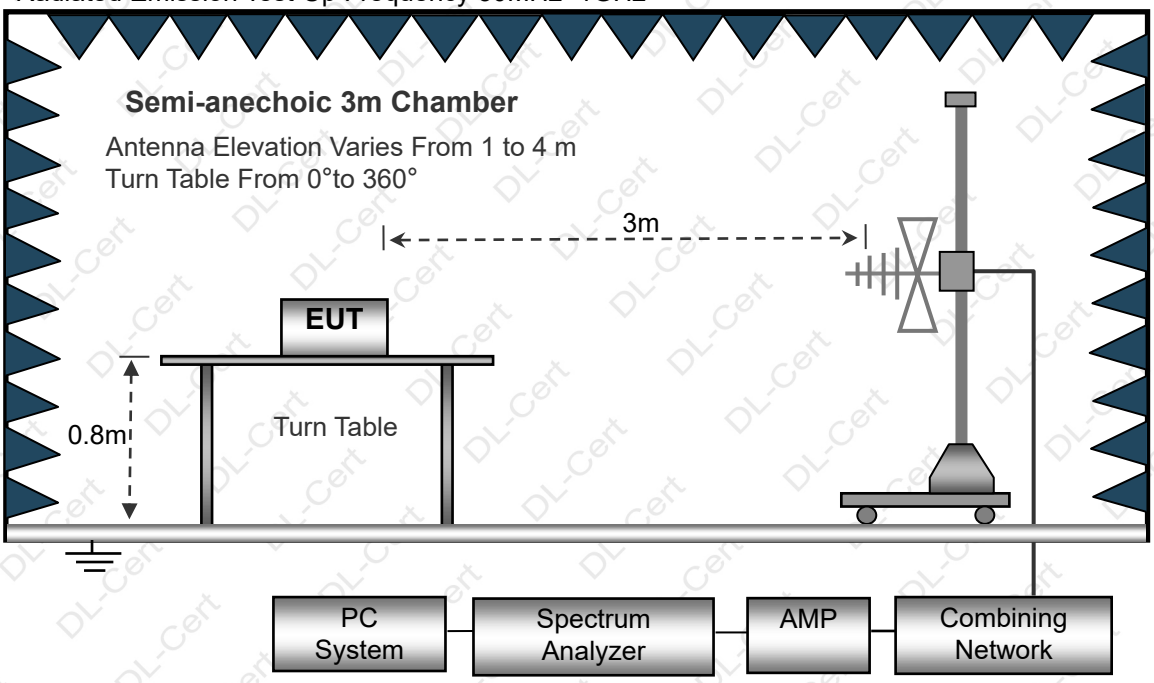

（C）Radiated Emission Test-Up Frequency Above 1GHz

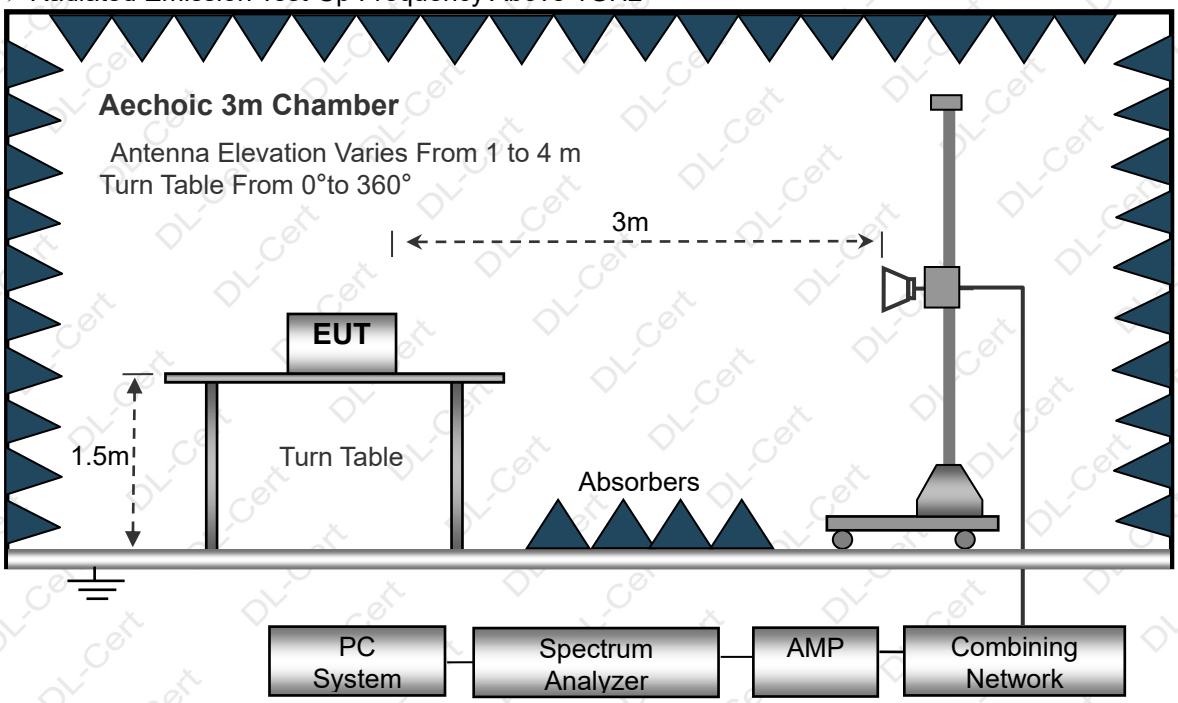

3.2.5 EUT OPERATING CONDITIONS

The EUT tested system was configured as the statements of 2.3 Unless otherwise a special operating condition is specified in the follows during the testing.

3.2.6 TEST RESULTS (BETWEEN 9KHZ – 30 MHZ)

Temperature:	20℃	Relative Humidtity:	48%
Pressure:	1010 hPa	Test Voltage :	DC 3.7V
Test Mode :	Mode 3	Polarization :	--

Freq.	Reading	Limit	Margin	State
(MHz)	(dBuV/m)	(dBuV/m)	(dB)	P/F
--	--	--	--	PASS
--	--	--	--	PASS

NOTE:

The amplitude of spurious emissions which are attenuated by more than 20dB below the permissible value has no need to be reported.
Distance extrapolation factor =40 log (specific distance/test distance)(dB);
Limit line = specific limits(dBuv) + distance extrapolation factor.

3.2.7 TEST RESULTS (BETWEEN 30MHZ – 1GHZ)

Temperature:	26℃	Relative Humidity:	54%
Pressure:	1010 hPa	Polarization :	Horizontal
Test Voltage :	DC 3.7V		
Test Mode :	Mode 3		

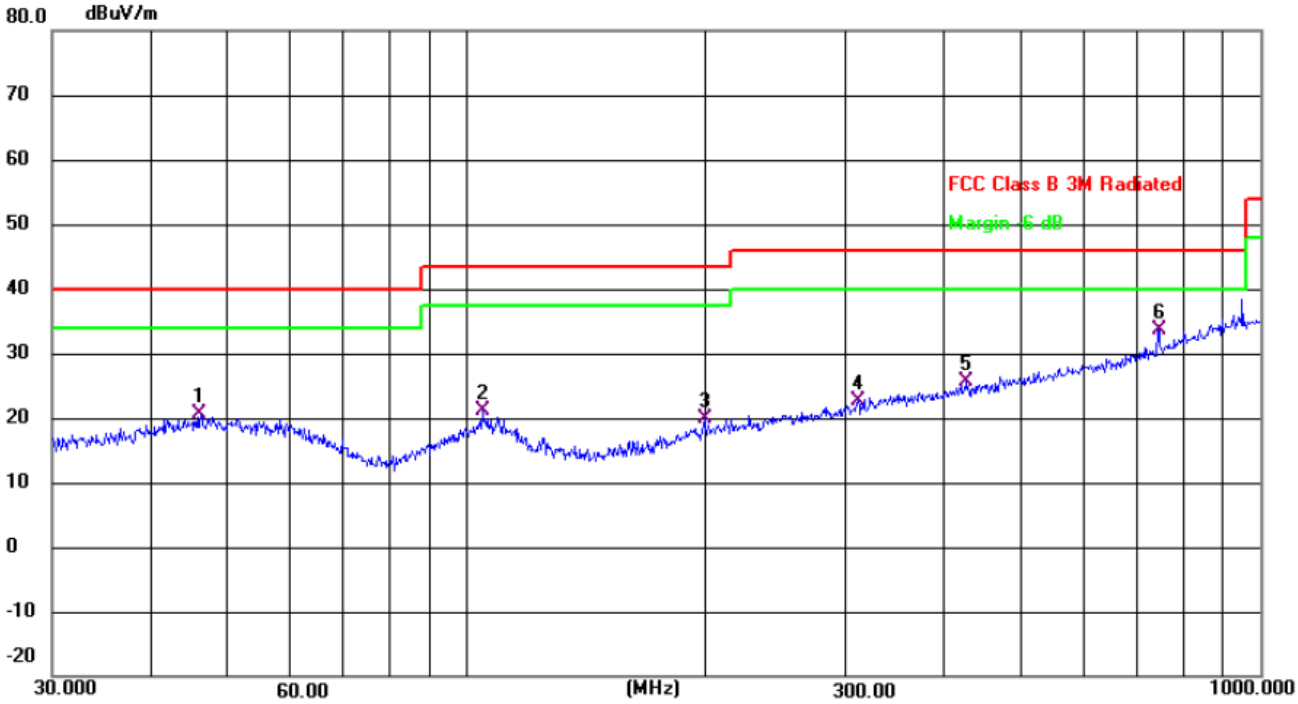

No.	Mk.	Freq.	Reading Level	Correct Factor	Measure-ment	Limit	Margin	
		MHz	dBuV	dB/m	dBuV/m	dBuV/m	dB	Detector
1		46.1779	27.59	-7.05	20.54	40.00	-19.46	QP
2		104.5361	30.21	-8.96	21.25	43.50	-22.25	QP
3		199.2855	28.90	-8.94	19.96	43.50	-23.54	QP
4		311.0867	28.30	-5.72	22.58	46.00	-23.42	QP
5		425.0280	28.58	-3.07	25.51	46.00	-20.49	QP
6	*	744.8661	30.64	3.02	33.66	46.00	-12.34	QP

Remark:
Correct Factor = Cable loss + Antenna factor – Preamplifier;
Level = Reading Level + Correct Factor; Margin = Limit – Level;

Temperature:	26℃	Relative Humidity:	54%
Pressure:	1010 hPa	Polarization :	Vertical
Test Voltage :	DC 3.7V		
Test Mode :	Mode 3		

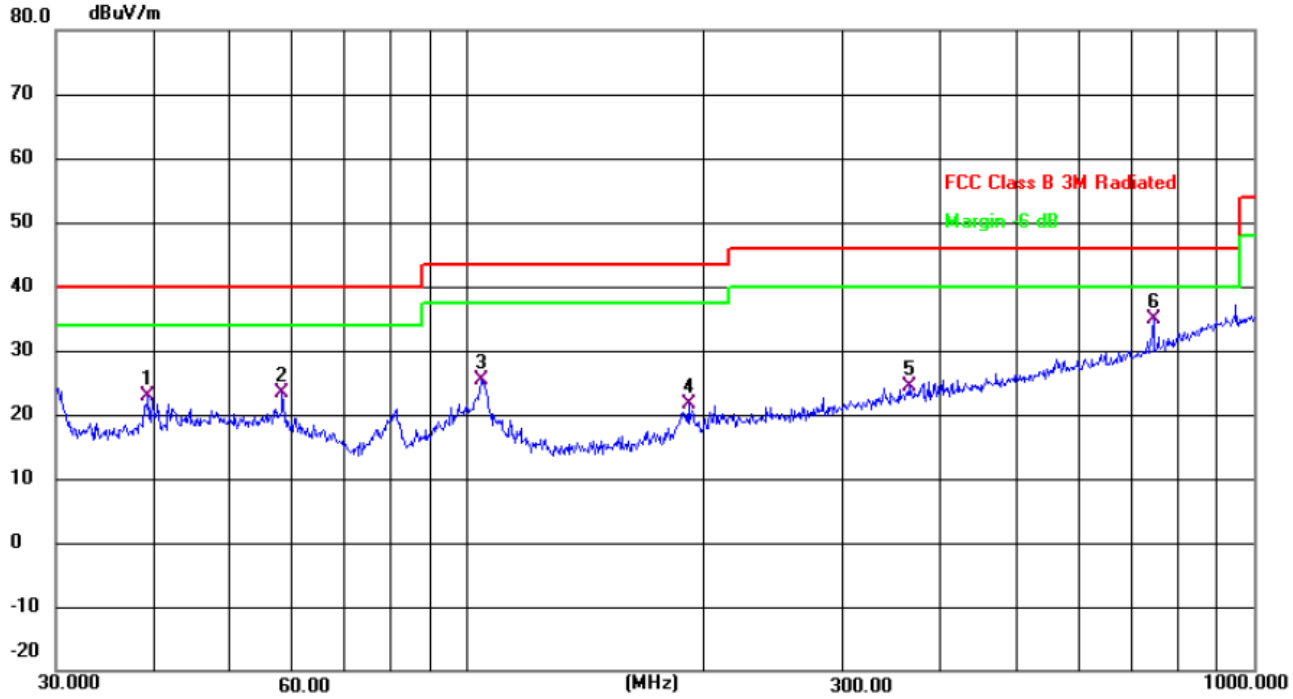

No.	Mk.	Freq.	Reading Level	Correct Factor	Measure-ment	Limit	Margin	
		MHz	dBuV	dB/m	dBuV/m	dBuV/m	dB	Detector
1		39.2991	30.84	-8.02	22.82	40.00	-17.18	QP
2		58.2030	31.40	-8.10	23.30	40.00	-16.70	QP
3		104.1701	34.33	-9.04	25.29	43.50	-18.21	QP
4		191.0738	31.17	-9.43	21.74	43.50	-21.76	QP
5		364.2595	28.73	-4.39	24.34	46.00	-21.66	QP
6	*	744.8661	31.85	3.02	34.87	46.00	-11.13	QP

Remark:

Correct Factor = Cable loss + Antenna factor – Preamplifier;

Level = Reading Level + Correct Factor; Margin = Limit – Level;

3.2.8 TEST RESULTS (1GHZ~25GHZ)

Polar (H/V)	Frequency (MHz)	Meter Reading (dBuV)	Pre-amplifier (dB)	Cable Loss (dB)	Antenna Factor (dB/m)	Emission Level (dBuV/m)	Limits (dBuV/m)	Margin (dB)	Detector Type
operation frequency:2402									
V	4804.00	63.19	50.65	6.88	31.29	50.71	74	-23.29	PK
V	4804.00	51.53	50.65	6.88	31.29	39.05	54	-14.95	AV
V	7236.00	53.43	49.98	7.16	36.63	47.24	74	-26.76	PK
V	7236.00	42.48	49.98	7.16	36.63	36.29	54	-17.71	AV
V	16087.00	50.75	51.53	11.34	41.52	52.08	74	-21.92	PK
H	4804.00	58.7	50.65	6.88	31.29	46.22	74	-27.78	PK
H	4804.00	47.52	50.65	6.88	31.29	35.04	54	-18.96	AV
H	7236.00	57.75	49.98	7.16	36.63	51.56	74	-22.44	PK
H	7236.00	46.59	49.98	7.16	36.63	40.4	54	-13.6	AV
H	16087.00	51.43	51.53	11.34	41.52	52.76	74	-21.24	PK
operation frequency:2440									
V	4880.00	62.48	50.67	6.89	31.38	50.08	74	-23.92	PK
V	4880.00	50.35	50.67	6.89	31.38	37.95	54	-16.05	AV
V	7311.00	52.43	50.02	7.24	36.63	46.28	74	-27.72	PK
V	7311.00	41.94	50.02	7.24	36.63	35.79	54	-18.21	AV
V	16087.00	49.32	51.53	11.34	41.52	50.65	74	-23.35	PK
H	4880.00	57.53	50.67	6.89	31.38	45.13	74	-28.87	PK
H	4880.00	52.92	50.67	6.89	31.38	40.52	54	-13.48	AV
H	7311.00	60.83	50.02	7.24	36.63	54.68	74	-19.32	PK
H	7311.00	48.59	50.02	7.24	36.63	42.44	54	-11.56	AV
H	16087.00	50.53	51.53	11.34	41.52	51.86	74	-22.14	PK
operation frequency:2480									
V	4960.00	62.65	50.79	6.83	31.36	50.05	74	-23.95	PK
V	4960.00	50.7	50.79	6.83	31.36	38.1	54	-15.9	AV
V	7386.00	51.75	50.11	7.25	36.58	45.47	74	-28.53	PK
V	7386.00	38.48	50.11	7.25	36.58	32.2	54	-21.8	AV
V	16087.00	49.7	51.53	11.34	41.52	51.03	74	-22.97	PK
H	4960.00	60.28	50.79	6.83	31.36	47.68	74	-26.32	PK
H	4960.00	51.53	50.79	6.83	31.36	38.93	54	-15.07	AV
H	7386.00	58.92	50.11	7.25	36.58	52.64	74	-21.36	PK
H	7386.00	47.9	50.11	7.25	36.58	41.62	54	-12.38	AV
H	16087.00	48.92	51.53	11.34	41.52	50.25	74	-23.75	PK

Remark:

1. Emission Level = Meter Reading + Antenna Factor + Cable Loss – Pre-amplifier,
   Margin= Emission Level - Limit
2. If peak below the average limit, the average emission was no test.
3. The amplitude of spurious emissions which are attenuated by more than 20dB below the permissible value has no need to be reported.

3.3 RADIATED BAND EMISSION MEASUREMENT

3.3.1 TEST REQUIREMENT:

FCC Part15 C Section 15.209 and 15.205

LIMITS OF RADIATED EMISSION MEASUREMENT (Above 1000MHz)

FREQUENCY (MHz)	Limit (dBuV/m) (at 3M)	
	PEAK	AVERAGE
Above 1000	74	54

Notes:

(1) The limit for radiated test was performed according to FCC PART 15C.

(2) The tighter limit applies at the band edges.

(3) Emission level (dBuV/m)=20log Emission level (uV/m).

Spectrum Parameter	Setting
Attenuation	Auto
Start Frequency	2300MHz
Stop Frequency	2520MHz
RB / VB (emission in restricted band)	1 MHz / 1 MHz for Peak, 1 MHz / 10Hz for Average

3.3.2 TEST PROCEDURE

Above 1GHz test procedure as below:

a. 1. The EUT was placed on the top of a rotating table 1.5 meters above the ground at a 3 meter camber. The table was rotated 360 degrees to determine the position of the highest radiation.

b. The EUT was set 3 meters away from the interference-receiving antenna, which was mounted on the top of a variable-height antenna tower.

c. The antenna height is varied from one meter to four meters above the ground to determine the maximum value of the field strength. Both horizontal and vertical polarizations of the antenna are set to make the measurement.

d. For each suspected emission, the EUT was arranged to its worst case and then the antenna was tuned to heights from 1 meter to 4 meters and the rota table was turned from 0 degrees to 360 degrees to find the maximum reading.

e. The test-receiver system was set to Peak Detect Function and Specified Bandwidth with Maximum Hold Mode.

f. If the emission level of the EUT in peak mode was 10dB lower than the limit specified, then testing could be stopped and the peak values of the EUT would be reported. Otherwise the emissions that did not have 10dB margin would be re-tested one by one using peak, quasi-peak or average method as specified and then reported in a data sheet.

g. Test the EUT in the lowest channel,the Highest channel

Note:

The horizontal and vertical polarities of the antenna were tested, and a pre-test was conducted on the EUT placement as three orthogonal axes X,Y,Z. The worst display of the test results was the Y-axis. The worst case emissions were reported.

3.3.3 DEVIATION FROM TEST STANDARD

No deviation

3.3.4 TEST SETUP

Radiated Emission Test-Up Frequency Above 1GHz

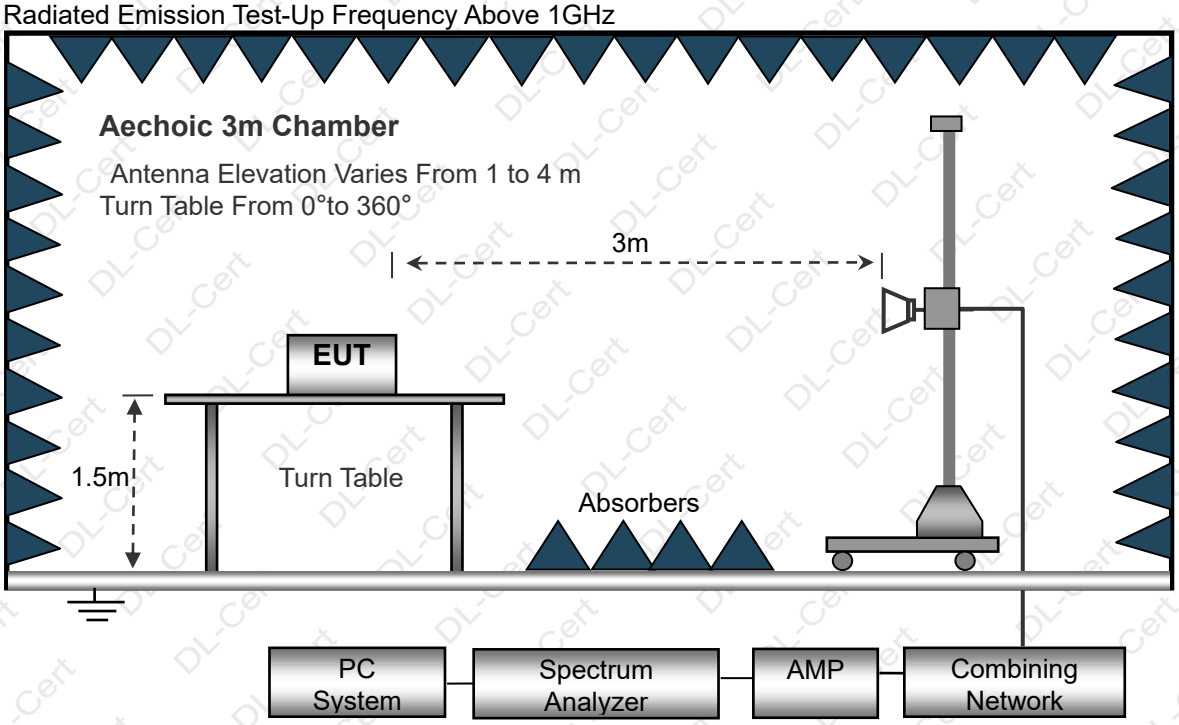

3.3.5 EUT OPERATING CONDITIONS

The EUT tested system was configured as the statements of 2.3 Unless otherwise a special operating condition is specified in the follows during the testing.

3.3.6 TEST RESULT

Polar (H/V)	Frequency (MHz)	Meter Reading (dBuV)	Pre-amplifier (dB)	Cable Loss (dB)	Antenna Factor (dB/m)	Emission Level (dBuV/m)	Limits (dBuV/m)	Margin (dB)	Detector Type
operation frequency:2402									
V	2390.00	68.43	52.12	2.73	27.38	46.42	74	-27.58	PK
V	2390.00	57.92	52.12	2.73	27.38	35.91	54	-18.09	AV
V	2400.00	67.48	52.16	2.78	27.41	45.51	74	-28.49	PK
V	2400.00	55.43	52.16	2.78	27.41	33.46	54	-20.54	AV
H	2390.00	69.59	52.12	2.73	27.38	47.58	74	-26.42	PK
H	2390.00	58.92	52.12	2.73	27.38	36.91	54	-17.09	AV
H	2400.00	68.7	52.16	2.78	27.41	46.73	74	-27.27	PK
H	2400.00	57.48	52.16	2.78	27.41	35.51	54	-18.49	AV

Polar (H/V)	Frequency (MHz)	Meter Reading (dBuV)	Pre-amplifier (dB)	Cable Loss (dB)	Antenna Factor (dB/m)	Emission Level (dBuV/m)	Limits (dBuV/m)	Margin (dB)	Detector Type
operation frequency:2480									
V	2483.50	69.43	52.23	2.86	27.44	47.5	74	-26.5	PK
V	2483.50	58.25	52.23	2.86	27.44	36.32	54	-17.68	AV
V	2500.00	68.7	52.26	2.88	27.49	46.81	74	-27.19	PK
V	2500.00	57.54	52.26	2.88	27.49	35.65	54	-18.35	AV
H	2483.50	68.59	52.23	2.86	27.44	46.66	74	-27.34	PK
H	2483.50	58.7	52.23	2.86	27.44	36.77	54	-17.23	AV
H	2500.00	67.32	52.26	2.88	27.49	45.43	74	-28.57	PK
H	2500.00	56.4	52.26	2.88	27.49	34.51	54	-19.49	AV

Remark:

1. Emission Level = Meter Reading + Factor, Margin= Emission Level - Limit
2. If peak below the average limit, the average emission was no test.
3. The amplitude of spurious emissions which are attenuated by more than 20dB below the permissible value has no need to be reported.

3.4 CONDUCTED BAND EDGE EMISSION&CONDUCTED SPURIOUS EMISSIONS MEASUREMENT

Test Requirement:	FCC Part15 C Section 15.247 (d)
Test Method:	KDB558074 D0115.247 Meas Guidance v05r02

3.4.1 APPLICABLE STANDARD

in any 100 kHz bandwidth outside the frequency bands in which the spread spectrum intentional radiator in operating, the radio frequency power that is produced by the intentional radiator shall be at least 20dB below that in the 100kHz bandwidth within the band that contains the highest level of the desired power, In addition, radiated emissions which fall in the restricted bands, as defined in§15.205(a), must also comply with the radiated emission limits specified in15.209(a).

If the transmitter complies with the conducted power limits based on the use of RMS averaging over a time interval, as permitted under paragraph (b)(3) of this section, the attenuation required under this paragraph shall be 30 dB instead of 20 dB.

3.4.2 TEST PROCEDURE

Establish a reference level by using the following procedure:
a) Set instrument center frequency to DTS channel center frequency.
b)Set the span to ≥ 1.5 times the DTS bandwidth.
c)Set the RBW=100 kHz.
d)Set the VBW ≥ [3 x RBW].
e)Detector = peak.
f)Sweep time = auto couple.
g) Trace mode = max hold.
h) Allow trace to fully stabilize.
i)Use the peak marker function to determine the maximum PSD level.
Note that the channel found to contain the maximum PSD level can be used to establish the reference level.

Establish an emission level by using the following procedure:
a) Set the center frequency and span to encompass frequency range to be measured.
b)Set the RBW=100 kHz.
c)Set the VBW ≥ [3 x RBW].
d) Detector = peak.
e) Sweep time = auto couple.
f) Trace mode = max hold.
g) Allow trace to fully stabilize.
h) Use the peak marker function to determine the maximum amplitude level.
Ensure that the amplitude of all unwanted emissions outside of the authorized frequency band (excluding restricted frequency bands) is attenuated by at least the minimum requirements specified in 11.11. Report the three highest emissions relative to the limit.

3.4.3 DEVIATION FROM STANDARD

No deviation.

3.4.4 TEST SETUP

3.4.5 EUT OPERATION CONDITIONS

The EUT tested system was configured as the statements of 2.4 Unless otherwise a special operating condition is specified in the follows during the testing.

3.4.6 TEST RESULTS

Please see annex.

4. PEAK OUTPUT POWER

4.1 APPLIED PROCEDURES / LIMIT

FCC Part15 (15.247) , Subpart C				
Section	Test Item	Limit	Frequency Range (MHz)	Result
15.247 (b)(3)	Peak Output Power	1 watt or 30dBm	2400-2483.5	PASS

4.1.1 TEST PROCEDURE

The testing follows Subclause 11.9.1.1 of ANSI C63.10
The RF output of EUT was connected to the spectrum analyzer by RF cable and attenuator.
The path loss was compensated to the results for each measurement.
Set to the maximum power setting and enable theEUT transmit continuously.
The EUT was operating in controlled its channel.
Use the following spectrum analyzer settings:
Set the RBW ≧DTS bandwidth.
Set VBW=3*RBW.
Set the span ≧3*RBW
Set Sweep time = auto couple.
Set Detector = peak.
Set Trace mode = max hold.
Allow trace to fully stabilize.
Use peak marker function to determine the peak amplitude level.

4.1.2 DEVIATION FROM STANDARD

No deviation.

4.1.3 TEST SETUP

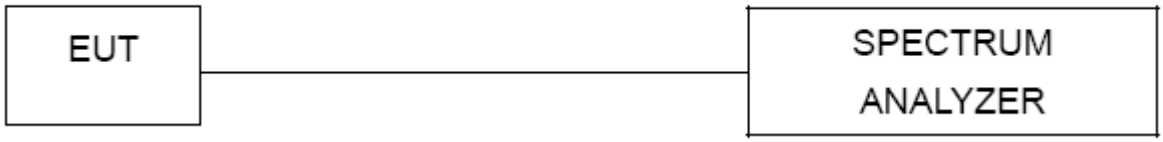

4.1.4 EUT OPERATION CONDITIONS

The EUT tested system was configured as the statements of 2.4 Unless otherwise a special operating condition is specified in the follows during the testing.

4.1.5 TEST RESULTS

Temperature:	25 ℃	Relative Humidity:	60%
Pressure:	1012 hPa	Test Voltage :	DC 3.7V

Please see annex.

5. POWER SPECTRAL DENSITY TEST

5.1 APPLIED PROCEDURES / LIMIT

FCC Part15 (15.247) , Subpart C				
Section	Test Item	Limit	Frequency Range (MHz)	Result
15.247	Power Spectral Density	8 dBm (in any 3KHz)	2400-2483.5	PASS

Spectrum Parameters	Setting
Attenuation	Auto
Span Frequency	= the frequency band of operation
RB	RBW ≥ 3kHz
VB	VBW ≥ 3RBW
Detector	Peak
Trace	Max Hold
Sweep Time	Auto

5.1.1 TEST PROCEDURE

a. The EUT was directly connected to the spectrum analyzer and antenna output port as show in the block diagram below,

5.1.2 DEVIATION FROM STANDARD

No deviation.

5.1.3 TEST SETUP

5.1.4 EUT OPERATION CONDITIONS

The EUT tested system was configured as the statements of 2.4 Unless otherwise a special operating condition is specified in the follows during the testing.

5.1.5 TEST RESULTS

Please see annex.

6. 6DB BANDWIDTH TEST

6.1 APPLIED PROCEDURES / LIMIT

FCC Part15 (15.247) , Subpart C				
Section	Test Item	Limit	Frequency Range(MHz)	Result
15.247(a)(2)	Bandwidth	>= 500KHz (6dB bandwidth)	2400-2483.5	PASS

6.1.1 TEST PROCEDURE

1. Set RBW = 100 kHz.
2. Set the video bandwidth (VBW) ≥RBW.
3. Detector = Peak.
4. Trace mode = max hold.
5. Sweep = auto couple.
6. Allow the trace to stabilize.
7. Measure the maximum width of the emission that is constrained by the frequencies associated with the two outermost amplitude points (upper and lower frequencies) that are attenuated by 20 dB relative to the maximum level measured in the fundamental emission.

6.1.2 DEVIATION FROM STANDARD

No deviation.

6.1.3 TEST SETUP

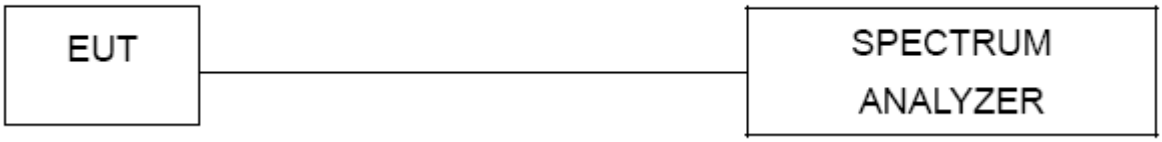

6.1.4 EUT OPERATION CONDITIONS

The EUT tested system was configured as the statements of 2.3 Unless otherwise a special operating condition is specified in the follows during the testing.

6.1.5 TEST RESULTS

Please see annex.

7. ANTENNA REQUIREMENT

7.1 STANDARD REQUIREMENT

15.203 requirement: For intentional device, according to 15.203: an intentional radiator shall be designed to ensure that no antenna other than that furnished by the responsible party shall be used with the device.

7.2 EUT ANTENNA

The EUT antenna is Internal Antenna, It comply with the standard requirement.

8. TEST SETUP PHOTO

Reference to the appendix I for details.

9. EUT PHOTO

Reference to the appendix II for details.

※※※※※ **END OF REPORT** ※※※※※