INSTALLING REMOTE CONTROL BATTERIES

1.While pressing the release latch on the back of the remote control, lift the battery compartment cover off of the remote control.
2.Insert two AAA batteries into the battery compartment.
Make sure that you match the + and – symbols on the batteries with the + and – symbols in the battery compartment.
3.Replace the battery compartment cover.

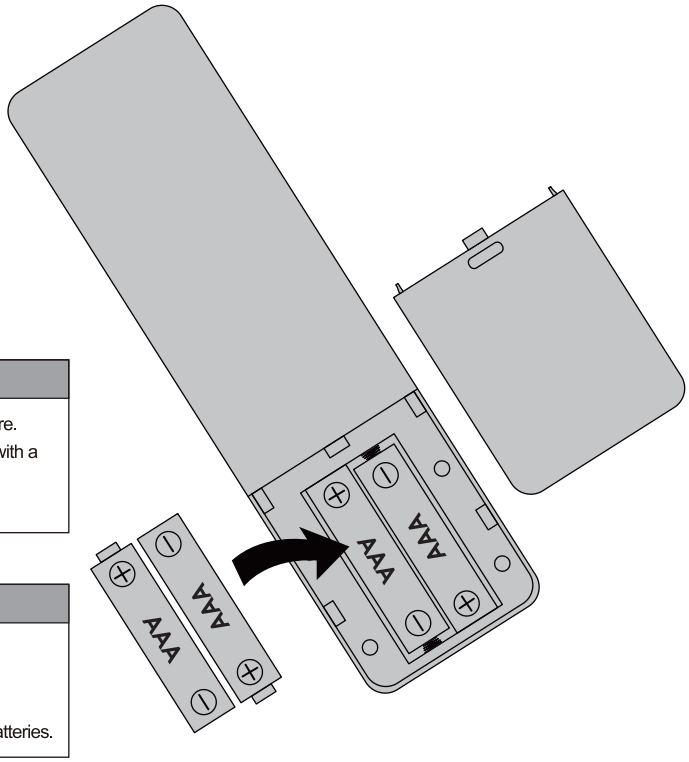

Cautions

- Batteries should not be exposed to excessive heat, such as sunshine, heat registers, or fire.
- Battery chemicals can cause a rash. If the batteries leak, clean the battery compartment with a cloth. If chemicals touch your skin, wash immediately.
- Make sure that batteries are disposed of correctly. Do not burn or incinerate.

Notes

- Do not mix batteries of different types.
- Do not mix old and new batteries.
- Remove batteries when the charge is depleted.
- If the remote control is not going to be used for an extended period of time, remove the batteries.

REMOTE CONTROL

1.Remote control distance: ≤20 meters (open space)

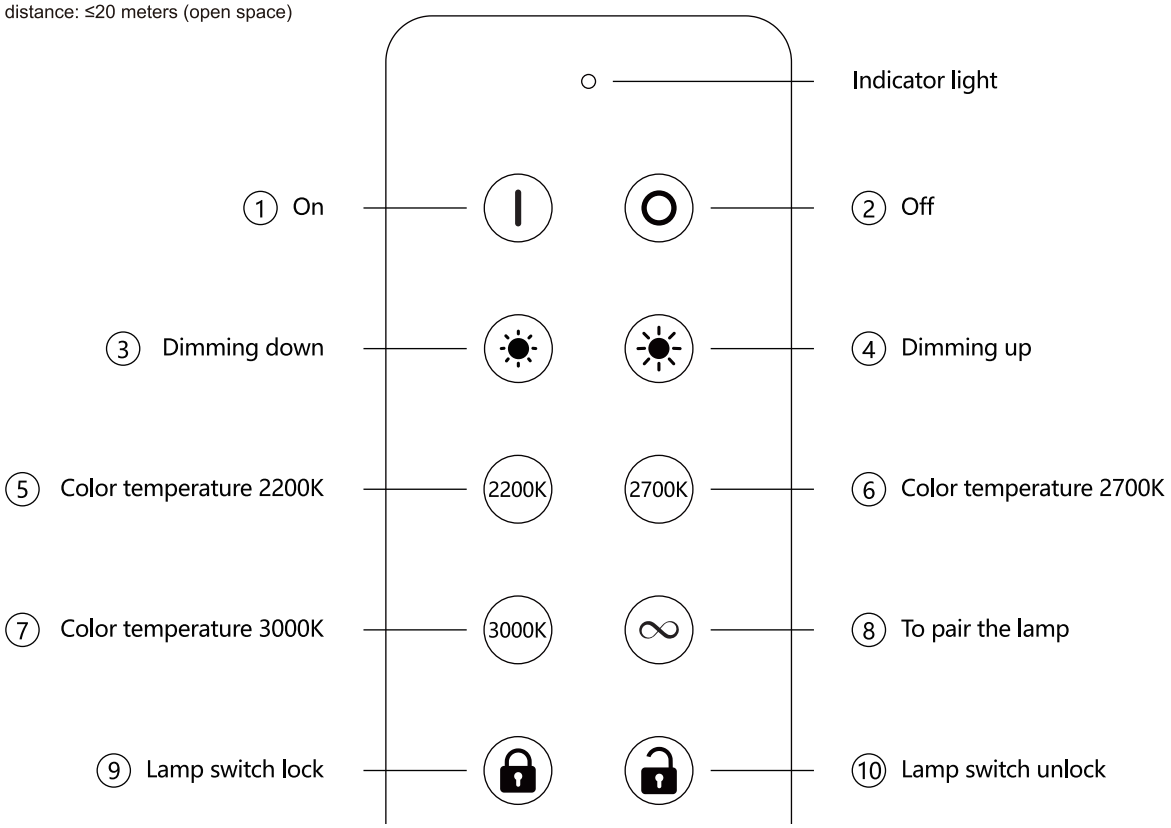

LAMP SWITCH LOCK

THE LAMP ONLY FUNCTIONS WHEN IT IS **NOT** BEING CHARGED

THE FUNCTION IS ONLY OPERATIONAL WHEN THE LAMP IS SWITCHED ON

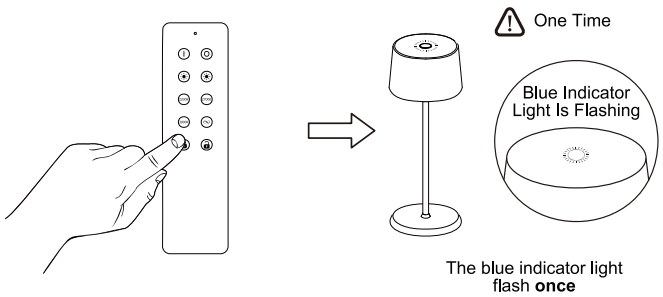

LAMP SWITCH UNLOCK

THE FUNCTION IS ONLY OPERATIONAL WHEN THE LAMP IS SWITCHED ON

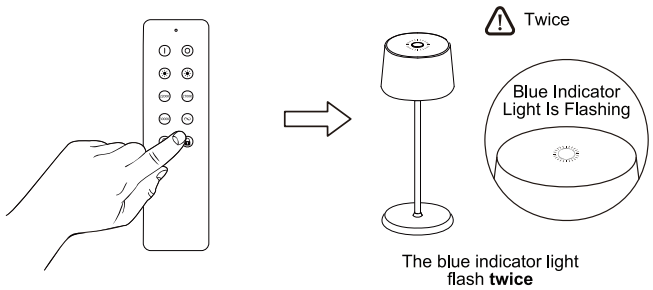

Tips

- When the lamp runs out of the battery, it automatically unlocks.
- When the remote control turns off the table lamp, it automatically unlocks.
- The table lamp automatically unlocks when it is charging.

TO PAIR THE LAMP

THE LAMP ONLY FUNCTIONS WHEN IT IS BEING CHARGED

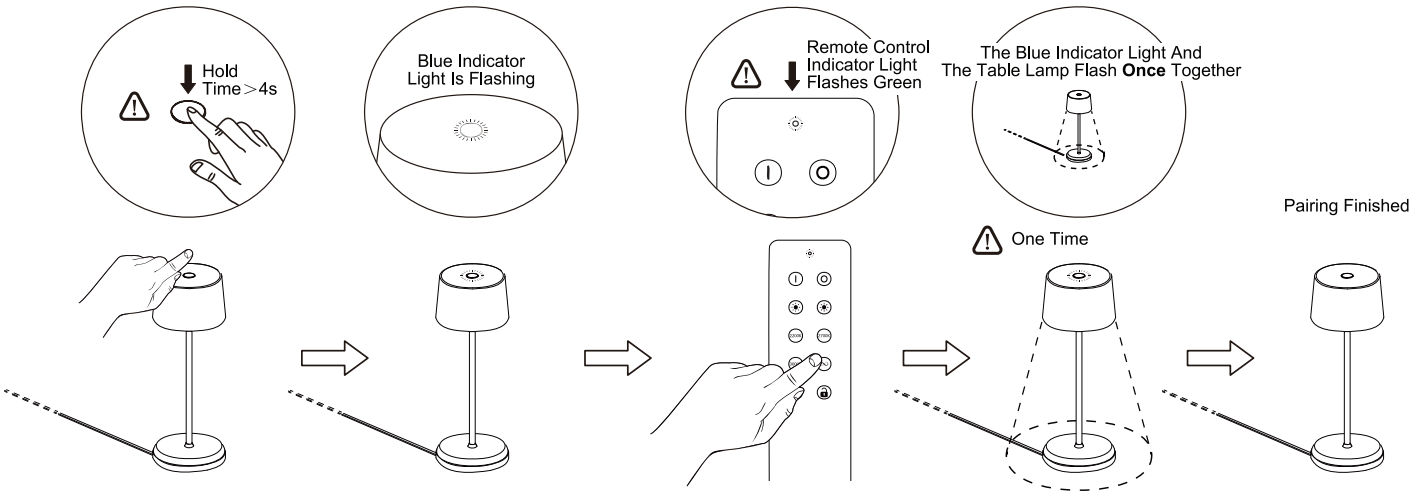

Step 1

- Hold the switch for 4 seconds until the blue indicator light begins to flash, then release it.

Step 2

- The blue indicator light is flashing, and the lamp is waiting to be paired.

Step 3

- Press the pairing button on the remote control and maintain pressure until the lamp has been successfully paired.
- Simultaneously, the indicator light on the remote control will flash green.

TO UNPAIR THE LAMP

THE LAMP ONLY FUNCTIONS WHEN IT IS BEING CHARGED

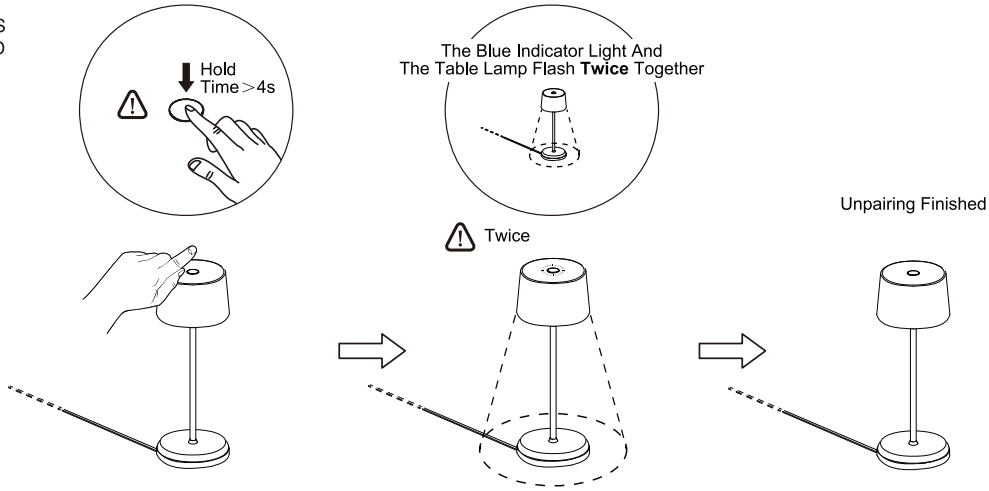

Step 1

- Hold the switch for 4 seconds until both the blue indicator light and the lamp flash twice simultaneously, indicating that the table lamp has been unpaired.

FCC Warning

This device complies with part 15 of the FCC Rules. Operation is subject to the following two conditions: (1) This device may not cause
harmful interference, and (2) this device must accept any interference received, including interference that may cause undesired operation.

Note: This equipment has been tested and found to comply with the limits for a Class B digital device, pursuant to part 15 of the FCC
Rules. These limits are designed to provide reasonable protection against harmful interference in a residential installation. This
equipment generates, uses and can radiate radio frequency energy and, if not installed and used in accordance with the instructions,
may cause harmful interference to radio communications. However, there is no guarantee that interference will not occur in a particular
installation. If this equipment does cause harmful interference to radio or television reception, which can be determined by turning
the equipment off and on, the user is encouraged to try to correct the interference by one or more of the following
measures:
—Reorient or relocate the receiving antenna.
—Increase the separation between the equipment and receiver.
—Connect the equipment into an outlet on a circuit different from that to which the receiver is connected.
—Consult the dealer or an experienced radio/TV technician for help.

Note: The Grantee is not responsible for any changes or modifications not expressly approved by the party responsible for compliance. such modifications could void the user's authority to operate the equipment.

The device has been evaluated to meet general RF exposure requirement. The device can be used in portable exposure condition without restriction.