# 深圳赛维通讯科技有限公司

# Shenzhen Saiwei Communication Technology Co., Ltd

## Antenna test report

No. 401, Building 211, Tairan Industrial and Trade Park, Tairan Fourth Road, Futian District, Shenzhen, Guangdong Province, China

Customer Name: Tai Lefeng

Project name: S21-WX

Reporting time: 20240702

Saiwei - Sai is far away, and Wei is eternal!

# Catalogue


- Introduction to project debugging
- Report version feed
- Test environment
- Main antenna matching circuit
- Main antenna dark room data
- Additional instructions

# Introduction to project debugging

| Type | Smart phone | | | | | | | |
|---|---|---|---|---|---|---|---|---|
| Plate type | Motherboard | | | | | | | |
| Antenna Overview | Main antenna | Frequency band | | Premature line status | Yao line form | Design area | Matching changes | |
| | | 2G | | FPC | PIFA | | | |
| | | 3G | | | | | | |
| | | 4G | | | | | | |
| | Other antennas | BT/WIFI | 2.4G/5G | | PIFA | | | |
| | | GPS | 1.575G | | | | | |
| | | Episodes | | | PIFA | | | |
| Prototype status | | | Environmental treatment | | | | | |

# Report version feed

| Edition | Date | Overview of meat |
|---|---|---|
| V1 | 20240702 | Test data |
| | | |
| | | |
| | | |
| | | |
| | | |
| | | |
| | | |

# Test environment

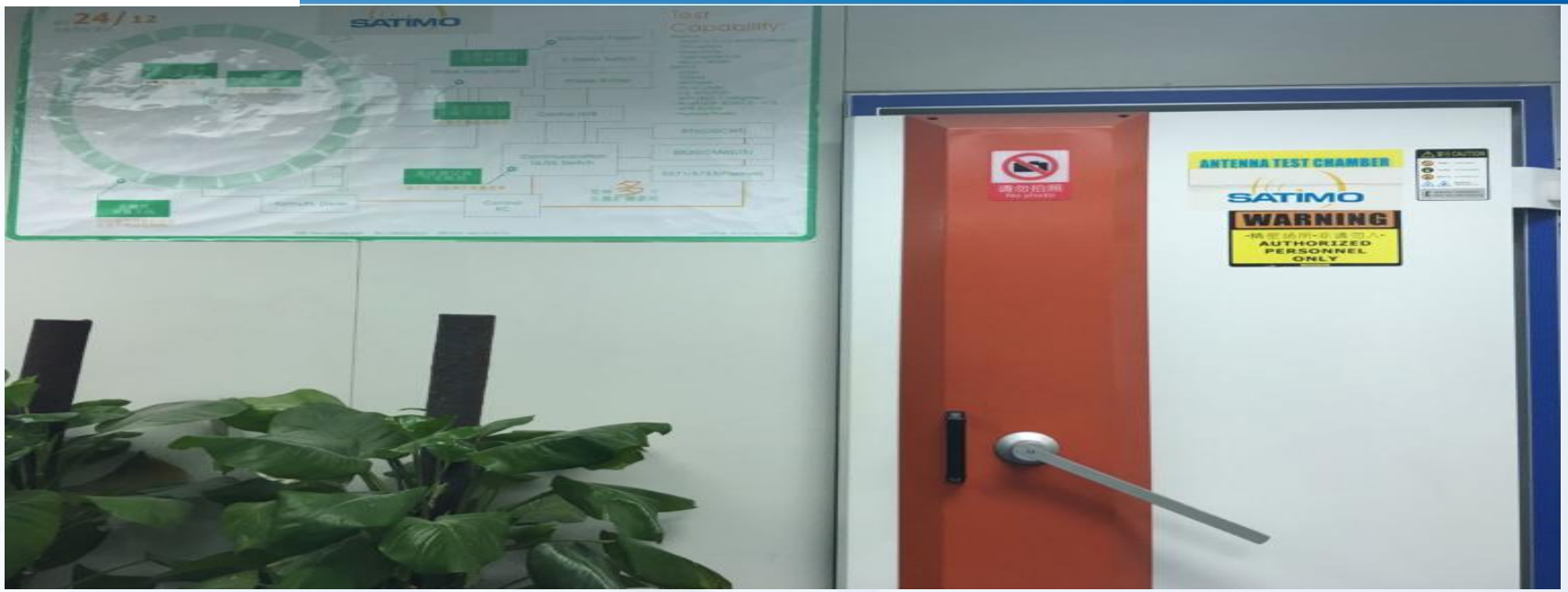


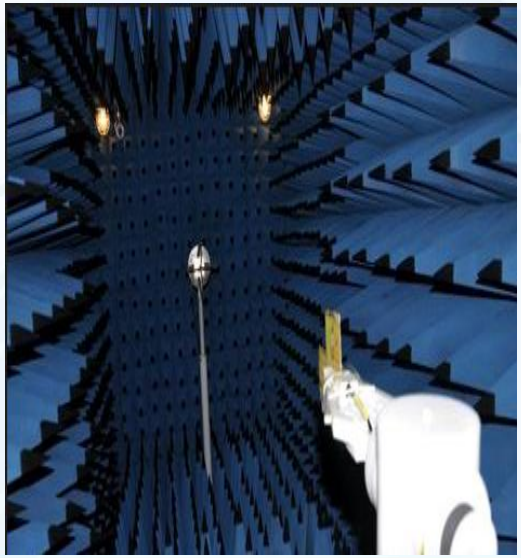

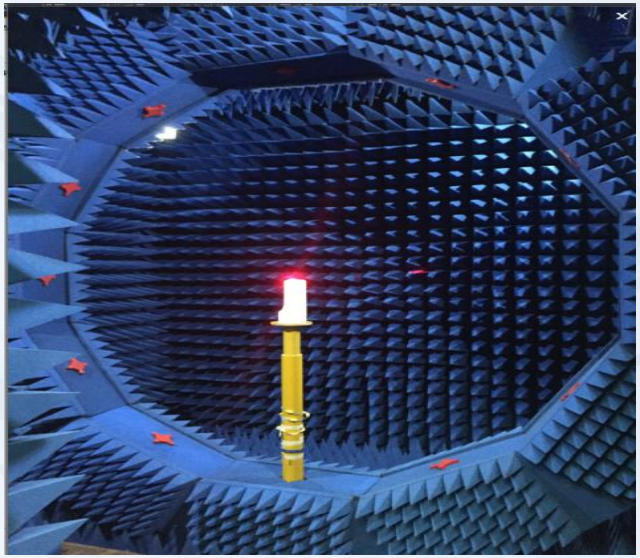

# Main antenna matching circuit

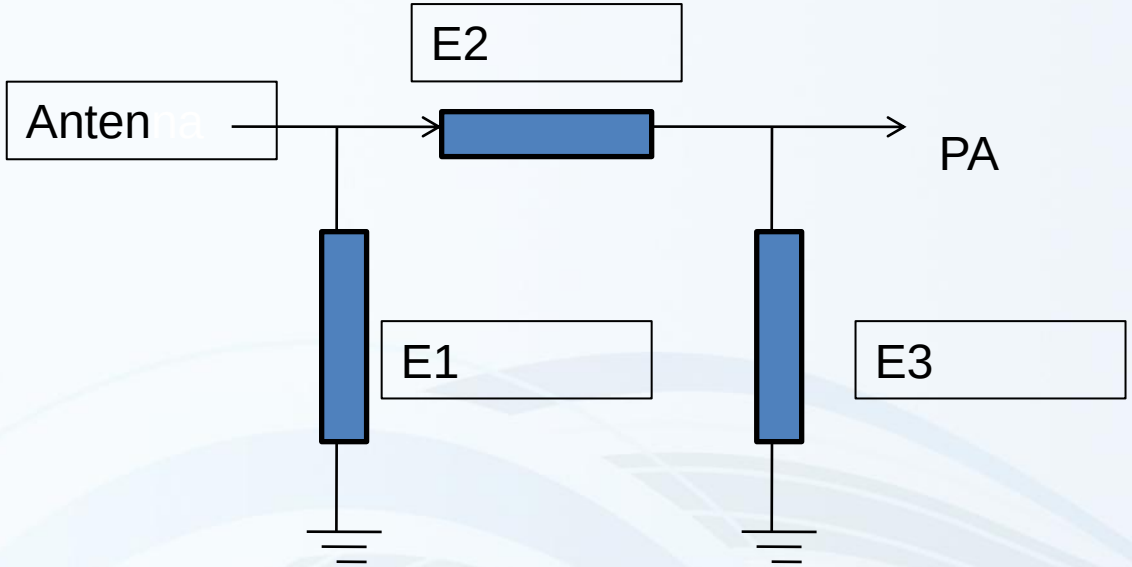


| Element | Value |
|---|---|
| E1(0402) | N/A |
| E2(0402) | N/A |
| E3(0402) | N/A |

# Antenna gain

| Standard | Band | Gain(dbi) |
|---|---|---|
| WIFI | 2.4G | 1.2 |
| WIFI | 5G | -2 |
| BT | 2.4G | 1.2 |
| GPS | 1.575G | -1.8 |

# 3D picture display

WIFI-2.4G

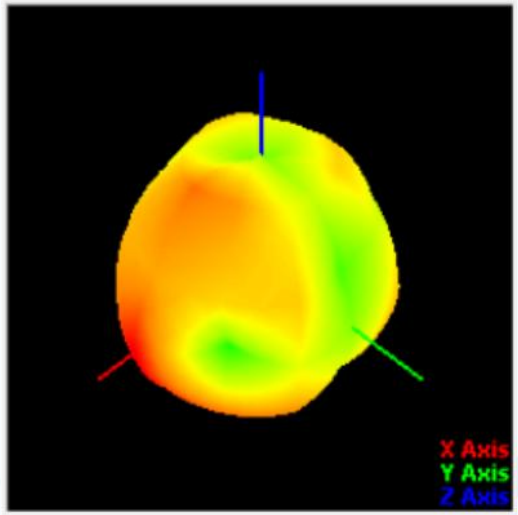


BT

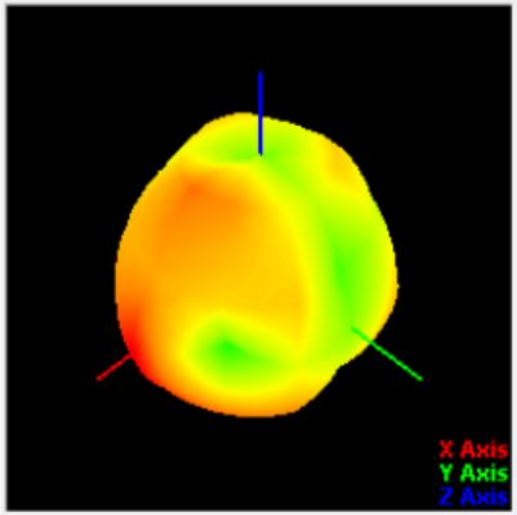


GPS

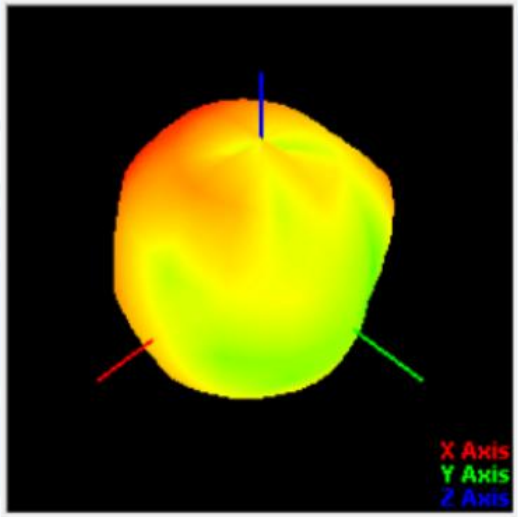


WIFI-5G

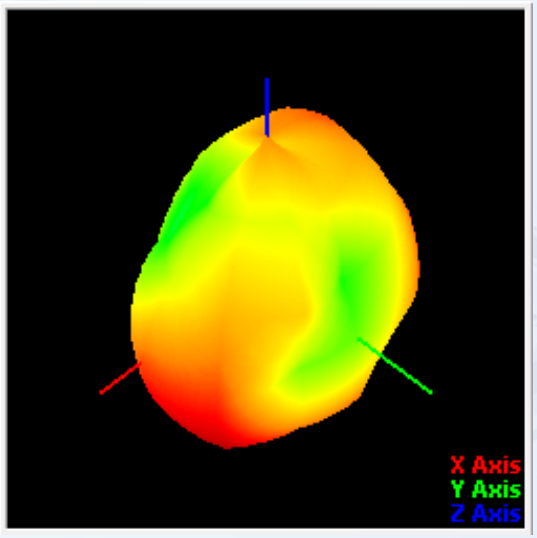

# Antenna specifications

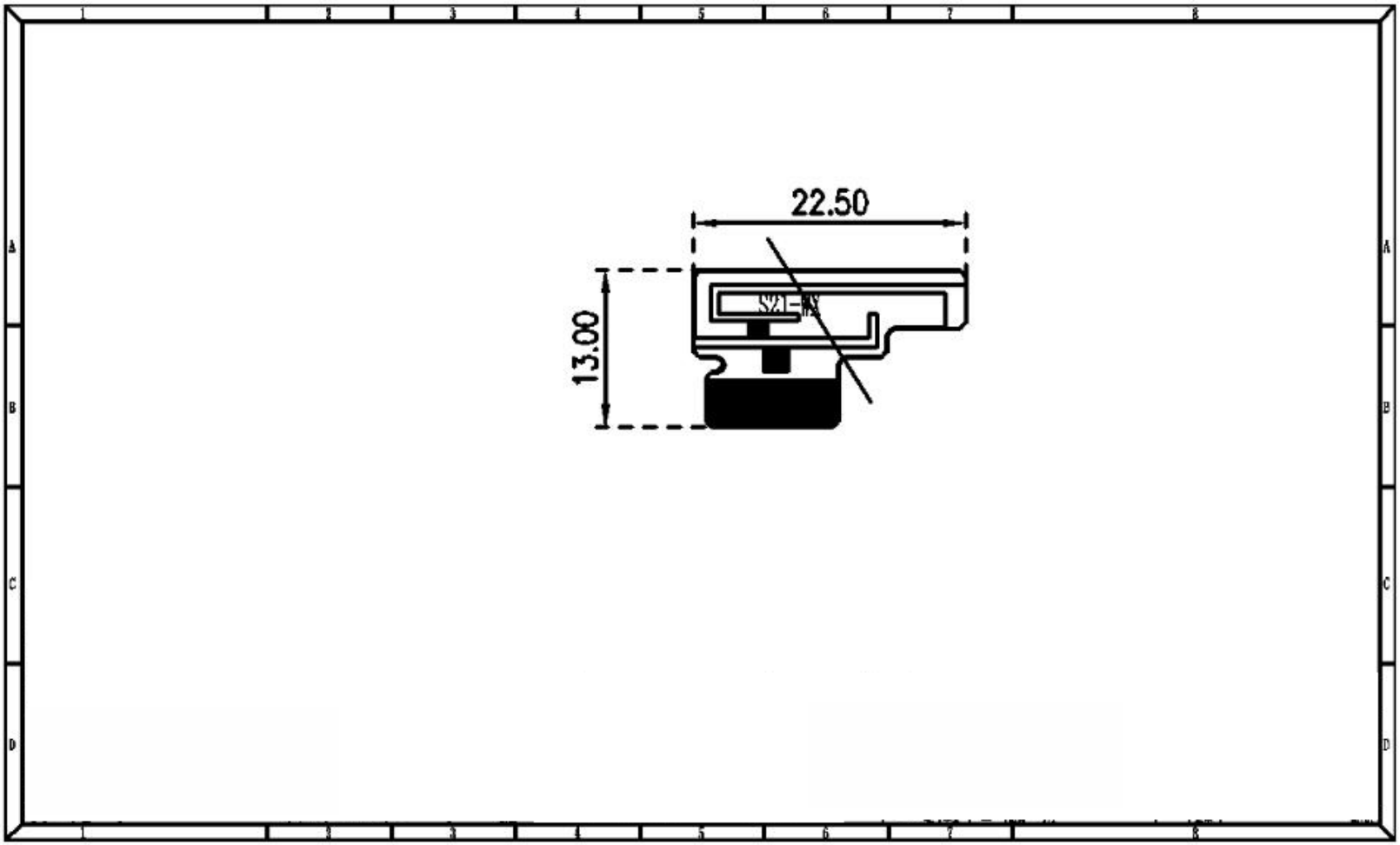

# Additional instructions

⌂ Please carefully confirm whether the matching circuit mentioned in the report is modified and whether the environmental processing is conductive, which will directly affect the antenna performance.

⌂ The parameters provided in this report are only for the reference given by customers to our demo.

⌂ If your company has a prototype with the latest trial production or update status (replacement of materials, update software, replacement of environment processing, etc.), please submit it to our company for verification as soon as possible to confirm whether the antenna performance has been affected.。

⌂ If you need to send it to a third party for retest or send it to the customer for testing, please be sure to hand over the machine that needs to be tested by our company for testing and confirmation, because of the consistency of the motherboard, the consistency of assembly, and the difference in antenna assembly, etc.All factors may lead to the deviation of antenna parameters.

赛维通讯 sunwin

# THANKS !

Saiwei - Sai is far away, and Wei is eternal!