CONTENTS

A.MONO INPUT CHANNEL SECTION **1-2**
B.MASTER SECTION 3
C.EFFECT SECTION **4-6**
D.MP3 PLAYER SECTION 7
E.MIXER OUTPUT SECTION 8
F.REAR VIEW SECTION 9
G.INSTALLATION 9
H.CONNECTIONS **10-11**
I. APPENDIX **12**

Ultra low noise 8,12,16,24 Channel Mic/Line/USB Mixer

▲ 8,12,16,24 Mono Input Channels with XLR and Un/Balanced Line,INSERT Inputs

▲ 2/4 groups with INSERT jack

▲ 2/3/4 Aux Send per channel for external effects and monitoring

▲ AUX1-2 equip with Pre/Post fader switch(Optional function with difference model)

▲ Foot switch jack,Monitor jack,CD/TAPE input and output

▲ Low Cut switch on each channel.

▲ Effect send to AUX with individual volume control knobs(Optional function)

▲ Long LED Light with switch(Optional function with difference model)

▲ Mp3 player with LCD,recording and Bluetooth.(Optional function with difference model)

▲ +48V Phantom Power with main switch

▲ Uitra-musical 4-band EQ on all channels

▲ Peak LEDs on all Channels,

▲ Built in 200 kinds DSP effect processorwith LCDdislay.

▲ 4 Highly accurate 10 segment Bargraph Meters for GROUP and MAIN L/R outputs

▲ Built-in switching power supply.(External adapter is optional with difference model)

SAFETY INSTRUCTIONS

CAUTION:To reduce the risk of electrical shock,do not remove the cover (or back).No user serviceable parts inside; refer servicing toqualified personnel.

WARNING:To reduce the risk of fire or electricalshock,do not expose this appliance to rain or moisture.

CAUTION

RISK OF ELECTRIC SHOCK
D0 NOT OPEN

A This symbol,wherever it appears,alerts you to the presence of uninsulated dangerous voltage inside the enclosure -voltage that may be sufficient to constitute a risk of shock.

This symbol,wherever it appears,alerts you to important operating and maintenance instructions in the accompanying literature.Read the manual.

CONTENTS

A. MONO INPUT CHANNEL SECTION 1-2
B. MASTER SECTION 3
C. EFFECT SECTION 4-6
D. MP3 PLAYER SECTION 7
E. MIXER OUTPUT SECTION 8
F. REAR VIEW SECTION 9
G. INSTALLATION 9
H. CONNECTIONS 10-11
I. APPENDIX 12
J. BLOCK DIAGRAM 13

Ultra low noise 8,12,16 ,24 Channel Mic/Line/USB Mixer

- ▲ 8,12,16,24 Mono Input Channels with XLR and Un/Balanced Line, INSERT Inputs
- ▲ 2/4 groups with INSERT jack
- ▲ 2/3/4 Aux Send per channel for external effects and monitoring
- ▲ AUX1-2 equip with Pre/Post fader switch (Optional function with difference model)
- ▲ Foot switch jack, Monitor jack, CD/TAPE input and output
- ▲ Low Cut switch on each channel.
- ▲ Effect send to AUX with individual volume control knobs (Optional function)
- ▲ Long LED Light with switch (Optional function with difference model)
- ▲ Mp3 player with LCD, recording and Bluetooth.(Optional function with difference model)
- ▲ +48 V Phantom Power with main switch
- ▲ Ultra-musical 4-band EQ on all channels
- ▲ Peak LEDs on all Channels,
- ▲ Built in 200 kinds DSP effect processor with LCD dislay.
- ▲ 4 Highly accurate 10 segment Bargraph Meters for GROUP and MAIN L/R outputs
- ▲ Built-in switching power supply.(External adapter is optional with difference model)

SAFETY INSTRUCTIONS

CAUTION: To reduce the risk of electrical shock,do not remove the cover (or back). No user serviceable parts inside; refer servicing to qualified personnel.

WARNING: To reduce the risk of fire or electrical shock, do not expose this appliance to rain or moisture.

I CAUTION I

RISK OF ELECTRIC SHOCK
DO NOT OPEN

A This symbol, wherever it appears,alerts you to the presence of uninsulated dangerous voltage inside the enclosure -voltage that may be sufficient to constitute a risk of shock.

This symbol, wherever it appears, alerts you to important operating and maintenance instructions in the accompanying literature. Read the manual.

MONO INPUT CHANNEL SECTION

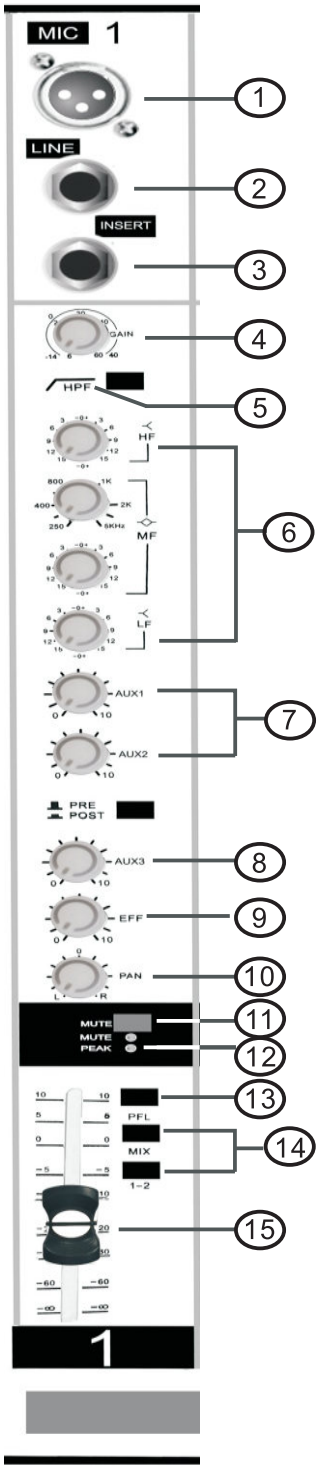

1. BALANCE INPUT (MIC)

Electronically Balanced inputs acceptable a standard XLR male connector. +48V Phantom Power available on each input Mic socket.

2. LINE INPUT

The unbal/balanced Mic input is provided for the use of an unbal/balance mic and is designed to accept an unbal/balanced high impedance input signal.
(This use for connection Deck, Turntable, keyboard etc...)

3. INSERT

The INSERT is a break point in the input chnnel signal path. It allows the signal to be taken out from the mixer, through an external equipment such as a compressor, and then back to the mixer to continue the final mix output.

4. GAIN

This button has a function which adjuts the input sensitivity of each channel in order to input the constant level of the signal.

5. LOW CUT

The low cut switch, 75Hz a at a rate of 18 dB per octave.

6. EQUALISER

1) Control the high frequency tone of each channel. Always set this control to the 12 o’clock position, but you can control the high frequency tone according to the speaker, the conditions of listening position and listener's taste. Clockwise rotation of the control increases level.
2) Control the middle frequency tone of each channel. Always set this control to the 12 o’clock position, but you can control the middle frequency tone according to the speaker, the conditions of listening position and listener's taste. Clockwise rotation of the control increases level.
3) Control the mid-low frequency tone of each channel. Always set this control to the 12 o’clock position, but you can control the mid-low frequency tone according to the speaker, the conditions of listening position and listener's taste. Clockwise rotation of the control increases level.
4) Control the low frequency tone of each channel. Always set this control to the 12 o’clock position, but you can control the low frequency tone according to the speaker, the conditions of listening position and listener's taste. Clockwise rotation of the control increases level.

MONO INPUT CHANNEL SECTION

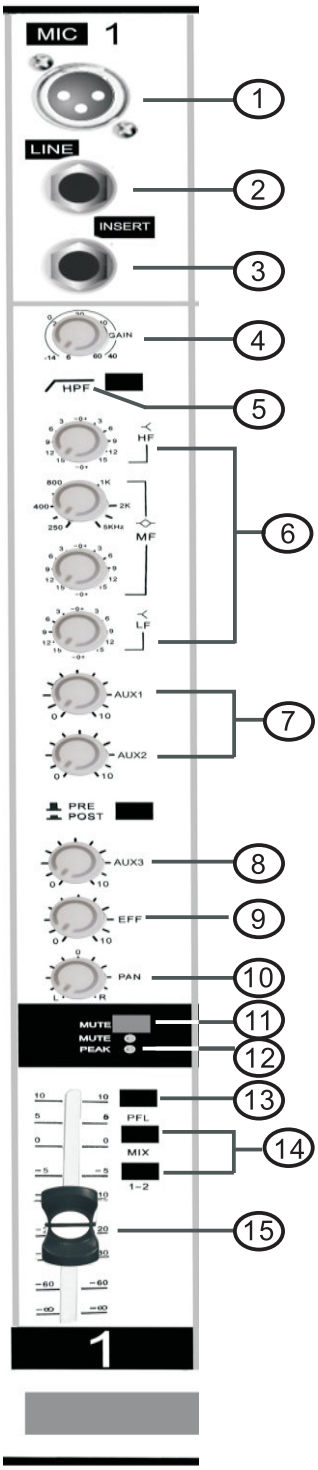

7. AUX1-2

These 2 AUX equip with PRE/POST switch for the AUX send pre-fader or post-fader.

(Optional function with difference model)

8. AUX 1-2.(AUX 3/4 Optional function with difference model)

This is normally derived before the channel fader (PREFADER), and is therefore unaffected by, the fader position and routing status. This makes the send particularly suitable for fold back or monitor feeds, which need to be controlled separately from the main P.A. Mix. All pre-fade sends may be selected internally to be PRE-FADER.

9. EFF

Use this control when you want to get effect sound by adjustment of input signal. When you don't use external source, the built-in DSP effect processor will be working.

10. PAN

The pan control sends continuously variable amounts of the post fader signal to either the left or right and G1 or G2 main buses. In the center position equal amounts of signal are sent to the left and right or G1 & G2 buses.

11. MUTE

Press this switch to turn the channel signal off.

The red LED lights to warn that the channel is muted.

12. PEAK

A red LED indicates a signal level at the insert return point, premaster fader, it illuminates at approximately 5 dB below clipping.

13.PFL

Press PFL to listen to the pre-fade channel signal in the headphones and local monitor without affecting the main outputs.

14.MIX/GROUP1-2

Press MIX switch to send signal to MAIN output. Press 1-2 switch to send signal to GROUP1-2 output.

15.CHANNEL FADER

This is function to adjust the volume of signal connection into each channel and adjust the volume of output, together with master fader. Normal operating position is at the "O" mark, providing 4dB of gain adove that point, if required.

MASTER SECTION

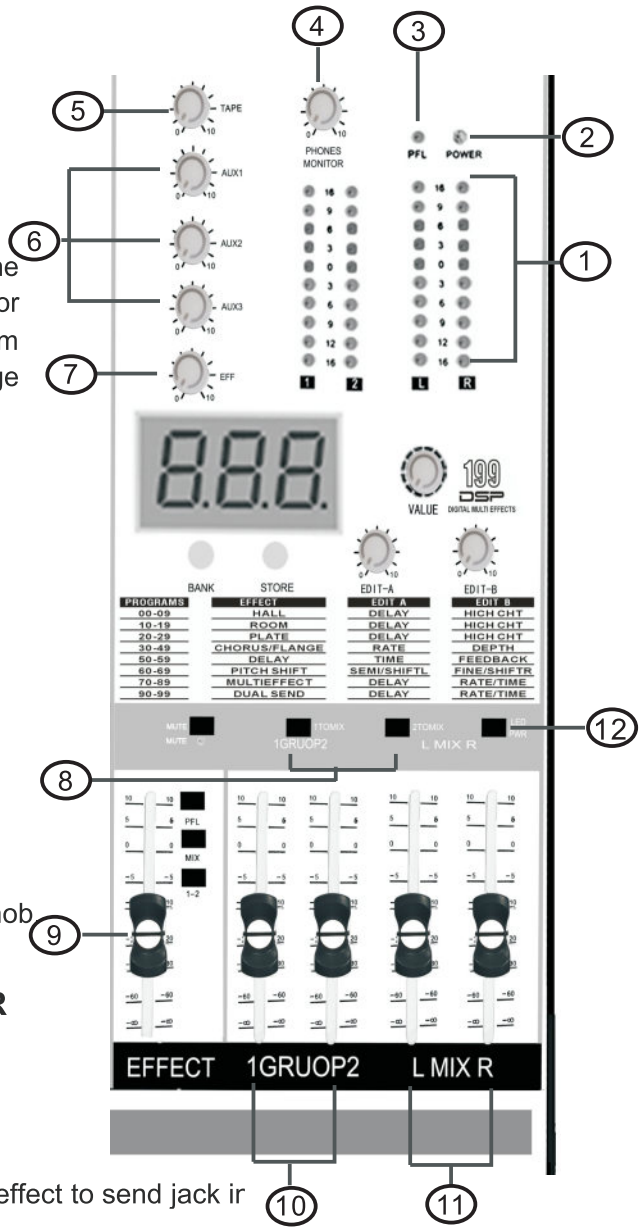

1. LEVEL INDICATOR

There provide 10 LED indicatiors to accurately display the signal level of the selected monitor source. Reduce the gain or level if the red '+16' peak indicator lights. For optimum performance the signals should be adjusted to read an average '0' with loudest peaks reaching around '+6'.

2. POWER LED

The POWER LED will be turned on when start working.

3. PFL LED

This LED will be turn on when press down the PFL switch .

4.PHONES/MONITOR

This controls the level of the signal sent to the headphones and monitor outpu socket.

5.TAPE

This controls the level of the signal sent to the TAPE/CD output socket.

6.AUX

Each of the AUX output has a master output level control knob. The aux input level is controlled by these knobs.

6. 1.FX TO AUX (OPTIONAL FUNCTION FOR DIFFERENCE MODEL)

This controls the level of the effect sent to each AUX output.

7. EFF

This is used for adjusting volume of effect, when sending effect to send jack ir effect panel.

8. SUB1-2/(TO SUB3-4) TO MIX

9. EFFECT FADER

This is used for adjusting the effect output level of built-in / external effect unit for each channel.

10. GROUP FADER

The GROUP FADERS set the final level of the Sub group outputs. These should normally be set close to the '0' mark if the input GAIN settings have been correctly set, to give maximum travel on the faders for smoothest control.

11. MIX FADERS

These faders control the overall level of the mix bus.

12. LED PWR (Optional Function for Difference Model)

Push down/up this the power switch to turn on/off the long LED light.

EFFECT SECTION

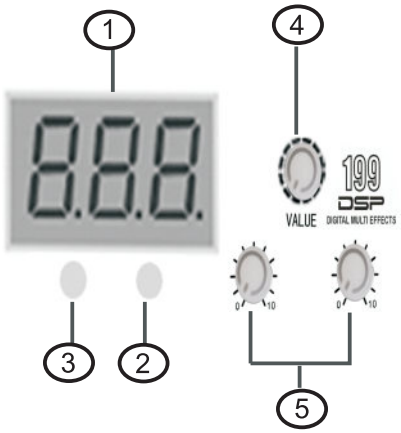

1. LED DISPLAY

The LED display typically shows the currently selected Program. It can also display the effect data which you saved (when the BANK button is held down) or para -meter values (when the [EDIT A] or [EDIT B] knobs are adjusted).

The display will dim slightly when it is not displaying the current Program. When the Store button is pressed, the Display will flash the destination Program number.

2. STORE Button.

When the [STORE] button is pressed, the LED Display will flash the number of the Program that the current program will be stored to. If Store is pressed again, the display will flash rapidly and the current Program will be stored.Programs can only be stored into the User bank, Programs 100-199.

3. BANK Button.

If this button is clicked once, a Program in the opposite bank will be selected. (i.e. If Preset Program 34 is sele -cted when Bank is pressed, the effect will switch to User Program134.)

4. Value Encoder.

The [VALUE] Encoder is used to select Programs and to change the effect data (see below).

5. Edit A/ Edit B Controls.

Each Program on the device has two parameters which can be adjusted. Depending on the type of Program selected, these might alter Reverb Decay, Chorus Depth, etc. When an Edit knob is adjusted, the new value is briefly shown on the LED Display.

PRESET EFFECT

#	DESCRIPTION	TYPE
00	All- purpose concert hall, great for vocals	Hall
01	Warm, large hall, try on piano or acoustic guitar	
02	Small, bright hall for snares	
03	Big, dark, scary castle reverb	
04	Live, medium hall	
05	Warm hall with 100ms predelay	
06	Deep, wide, bright space	
07	Parking garage reverb with lots of high damping	
08	Small recital hall for acoustic instruments	
09	Bright hall with low damping, try on vocals	
10	Medium, hardwood studio room	Room
11	Reverb early reflections, for percussion ambience	
12	Warm, medium room for instruments	
13	Tight room for ambience	
14	Gated room for snares and toms	
15	Very tiny room	
16	Small studio room with high damping	
17	Tighter gated room reverb	
18	Nonlinear reverb for retro '80s percussion	
19	Reverse reverb for effects	
20	Studio goldfoil plate reverb	Plate
21	Smooth snare drum plate	
22	Thin, transparent plate	
23	Bright, dense vocal plate	
24	Large, warm instrument plate	
25	Very small plate reverb, tasty on snares	
26	Long, smooth vocal plate	
27	Wide, diffuse piano ambience	
28	Skinny, vintage plate reverb	
29	Simulation of plate reverb with lots of damping	
30	Wide, true stereo chorus	Chorus/Flange
31	Fast, shallow stereo chorus	
32	True stereo chorus with less predelay	
33	Deep stereo chorus with feedback	
34	Wide chorus with delay for pads and volume swells	
35	Slow, deep quad chorus	
36	Fluid true stereo chorus	
37	Classic stereo chorus	
38	Subtle quad chorus	
39	True stereo flanger with doubling delay	
40	Slow, sweeping flange with heavy feedback	
41	Faster, bubbly stereo flange	
42	Slow triggered stereo flange	
43	Wide true stereo flange with positive feedback	
44	Faster, shallow stereo flange	
45	True stereo flange with + and - feedback	
46	Slow flange for grungy bass	
47	Slow auto pan (set Mix 100% wet)	
48	Medium tremolo (set Mix 100% wet)	
49	Faster tremolo for electric pianos (set Mix 100% wet)	

#	DESCRIPTION	TYPE
50	True stereo offset delay	Delay
51	Ping pong delay with band pass filter	
52	Rhythmic multitap delay	
53	True stereo 1/4 note and 1/8 note delay	
54	Long mono delay	
55	Stereo delay with 3 against 2 rhythm	
56	255ms Mono delay	
57	Stereo bouncing multitap delay	
58	255ms Ping pong delay, try with tap tempo	
59	Tape echo, repeats get darker as they decay	
60	Classic stereo detuner	Pitch Shift
61	500ms detuned delay program	
62	5th and 9th harmony for leads	
63	Thicker stereo detune program	
64	Faster detuned delay, great on guitar	
65	Upward staircasing pitch effect	
66	Mono pitch shifter with Semi and Fine controls	
67	Stereo detune with feedback	
68	Octave pitch shift	
69	Detune/delay program for synth pads	
70	Fast rock lezlie program (set Mix 100%wet)	Multi-Effect
71	Slow, warm lezlie for ballads (set Mix 100%wet)	
72	Thick stereo chorus into a hall	
73	Large room with flange and delay	
74	Flanged room, great for drums and guitars	
75	Room into a triggered flange, try on percussion	
76	Deep stereo chorus into a room	
77	Stereo flange into a small room	
78	Thick chorus into a bright room	
79	Delay into a room, great for lead vocals	
80	Slow chorus into a delay and room reverb	
81	Like above, but with a shallower chorus	
82	Fluid flange/delay/room program for guitar	
83	Like above, but with more room and less flange	
84	Chorus and delay into a bright room, for rhythm guitar	
85	225ms delay into a room	
86	Long delay into a room, perfect for leads	
87	350ms delay into room, good for mid tempo vocals	
88	Chorus/long delay/hall multieffect	
89	Room into flange with heavy feedback	
90	Hardwood room and a wide, true stereo chorus	Dual Send
91	Bright room and a slow, sweeping flange	
92	Large room and a stereo chorus	
93	Like above, with a warmer room. Great for ballads	
94	Dark room and a deep flange for rock mixes	
95	Tight room and a 150ms slapback delay	
96	Large room with a long delay for late night mixes	
97	Tight room and a slow stereo chorus	
98	Bright hall with a 1/4 note delay @ 108bpm	
99	Large room and a slow flange with feedback	

SAVE EFFCT PARAMETERS

#	DESCRIPTION	TYPE
100	Large, bright hall, perfect for piano	Hall
101	Small, bright hall for drums and brass	
102	Large, dense cathedral reverb	
103	Dreamy, ambient instrument space	
104	Medium hall with high damping, great for strings	
105	Breathy small hall for vocals	
106	Large hall with bass boost, try on drums	
107	Large, bright hall with lots of high damping	
108	Medium hall, great for snares and rimshots	
109	Large, warm hall for acoustic guitars and pianos	
110	Splashy stone room	Room
111	Medium studio room with high damping, try on guitar	
112	Large, dark room for vocals and winds	
113	Tight percussion room with lots of early reflections	
114	Large, deep room for almost anything	
115	60% of the signal is gated for a unique snare reverb	
116	Dense stone room with wide early reflections	
117	Small room for background vocals	
118	Long gated reverb, interesting on pianos	
119	Wide early reflections for ambience	
120	Bright instrument plate	Plate
121	Thin, transparent vocal plate	
122	Subtle tube plate emulation	
123	Dark plate, great for adding sustain to acoustic guitar	
124	Long plate with 70ms predelay	
125	Medium vocal plate with high damping	
126	Small, snappy plate for percussion and rhythm guitar	
127	Authentic warm plate for guitar, piano	
128	Bright instrument plate, slightly chorused	
129	Large, ambient plate for ballads, effects	
130	Silky, deep quad chorus	Chorus/Flange
131	Fast stereo chorus for active guitar and keyboard parts	
132	Big quad chorus with lots of feedback	
133	Faster quad chorus for bass	
134	Deep wide chorus with feedback	
135	Delayed chorus for sounds with a slow attack	
136	Shallow quad chorus for rock and country guitar	
137	Slow stereo chorus for electric piano	
138	Very slow chorus with stereo delay	
139	Wide, true stereo chorus with inverse feedback	
140	Smooth true stereo flange for vocals, strings	
141	Mild, shallow stereo flange	
142	Deep sweeping flange for tense rhythm guitar	
143	Dry stereo triggered flange	
144	Panning stereo flange, R is double the speed of L side	
145	Very deep stereo flanger for extremists	
146	Vintage stereo flange pedal, turn it up!	
147	Totally useless but fun effect	
148	Fast triggered pan (set Mix 100% wet)	
149	Medium speed surf guitar tremolo (set Mix 100%wet)	

#	DESCRIPTION	TYPE
150	Stereo widening delay	Delay
151	Stereo multitap for remix percussion effects	
152	Jazzy shuffle stereo delay	
153	Long ping pong delay for guitar	
154	Stereo slapback delay for rock vocals	
155	Short mono delay for more surfing guitar players	
156	Stereo delay panner (listen 100% wet)	
157	Thin phase delay for vocal effects	
158	Ambient dance echo effect	
159	Wide, 500ms stereo delay	
160	Stereo pitch shift with slapback delay	Pitch Shift
161	Stereo detune with 400ms delay	
162	Detuned, repeating echo program	
163	” Falling” pitch shifter effect	
164	Wide detune/delay program- huge on synth pads	
165	Rising whole tone pitch shift effect	
166	Pitched harmony: Up a 5th and down a 4th	
167	Thick stereo detuner with feedback	
168	Rhythmic pitch shift sequence	
169	Another falling pitch shifter for vocal effects	
170	Fast lezlie for guitar (set Mix 100% wet)	Multi-Effect
171	Slow lezlie into a hall for ballads (set Mix 100% wet)	
172	Authentic lezlie speaker into a small room (100% wet)	
173	Stereo chorus into hall program for clean guitars	
174	Flange/Delay/Room stack for guitars	
175	Large room into a flange, great on bright percussion	
176	Deep, resonant flange into a room	
177	Pitch shifting room, like the walls are moving...	
178	Flange with doubling delay into a small room	
179	Slight chorus into a live room, great for piano	
180	Fast triggered flange into a room	
181	Dreamy reverb for flashbacks in bad movies	
182	Chorus/Delay/Room multieffect for uptempo guitar	
183	440ms delay with small ambient reverb	
184	Huge Chorus multieffect for huge rock guitar	
185	Chorus into a room for funky clav or guitar	
186	Deep flange into a small hall for grungy guitar	
187	Flange into a 244ms delay with warm room reverb	
188	Fast delay into a room reverb for vocals, solos	
189	Large room into a deep flange- guaranteed to stimulate	
190	Warm hall with a stereo chorus	Dual Send
191	Bright hall with a slow flange	
192	Small hall and a smooth stereo chorus for ballad mixes	
193	Wood room reverb with 250ms delay for vocals	
194	Small room with a deep stereo chorus	
195	Large hall with a long delay for slower tempos	
196	Large room and a slow flange with negative feedback	
197	Wooden drum room with medium delay	
198	Warm plate with a slow stereo chorus	
199	Bright room with a thick stereo flange	

MP3 PLAYER SECTION（OPTIONAL FUNCTION FOR DIFFERENCE MODEL)

1 .PLAY/PAUSE KEY

This is the PLAY/PAUSE key for the USB/SD/MMC play. Push this button to PLAY or PAUSE the playing.

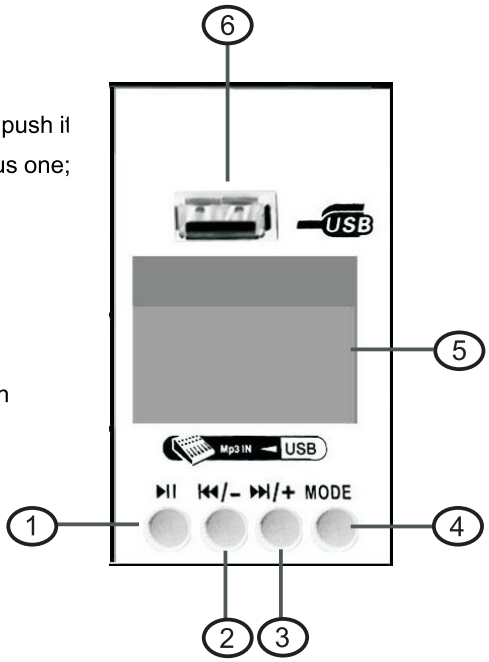

2. PREV/VOL- BUTTON

These is the search backward and reduce volume of the MP3player button, push it once to search the previous one, push twice to search previous and previous one; push it more than 3 seconds it will reduce the volume of the MP3 player.

3. NEXT/VOL + ►►■ BUTTON

This is the search forward and add volume of the MP3 play button， push it once to search the next one， push twice to search extend next one; push it more than 3 seconds it will add the volume of the MP3 player.

4. MP3 PLAYER PLAY MODE

This is the transfer key for change the playing mode (ALL File Repeat # Single File Repeat.)

5. MP3 PLAY LED DISPLAY

Display the song which one is playing.

6. USB INPUT JACK

OUTPUT SECTION

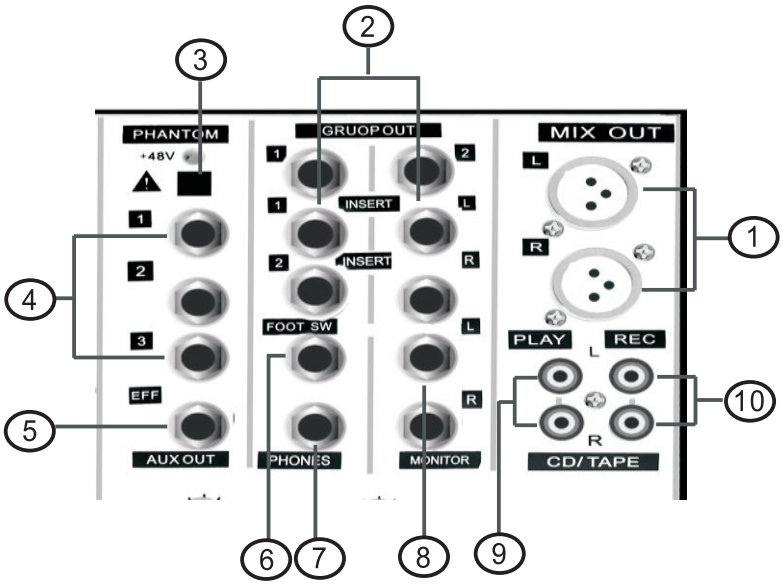

1. MIX OUTPUT JACK (LEFT/ RIGHT)

In this product, the final confirmed sound can be send to main amplifier through XLR & 1/4 jack.

2. GROUP 1-2 (1-4) OUTPUT JACK

There are to be output with the volume control against inputting signal into GRPS 1-2 (1-4) board. And the GROUP with INSERT jack.

3. +48 PHANTOM POWER SWITCH

Push down/up this switch to turn on/off the phantom power supply for each mono channel.
Caution: Please don't use the unbalance MIC input Carson（1, 3 connect jack） while the phantom power is working.

4. AUX SENDS (AUX2-4 for difference model)

Each of the AUX output have a western output level control knob.

5. EFF JACK

This is the jack for the external effect return back to the mixer .

6. FOOT SWITCH

A FC5 foot switch (sold separately) can be connected to this jack and used to toggle the digital effects ON and OFF.

7. PHONES JACK

This jack connects to a stereo headphone.

8. MONITOR JACK

This is used for monitoring the master signal and individually monitoring each channel with L/R &G1-2 (1-4).

9. PLAY(TAPE/CD INPUT)JACK

This jack is to be connected with cassette deck/CD when playing back.

10. REC (TAPE/CD OUTPU)T JACK

This jack is to be connected with cassette deck/CD when recording the mixed output.

REAR VIEW SECTION

1. POWER SWITCH

Push marked (1), when you want to operate. The power LED will be turned on when working.

2. POWER JACK

This is built-in connect the power supply jack.

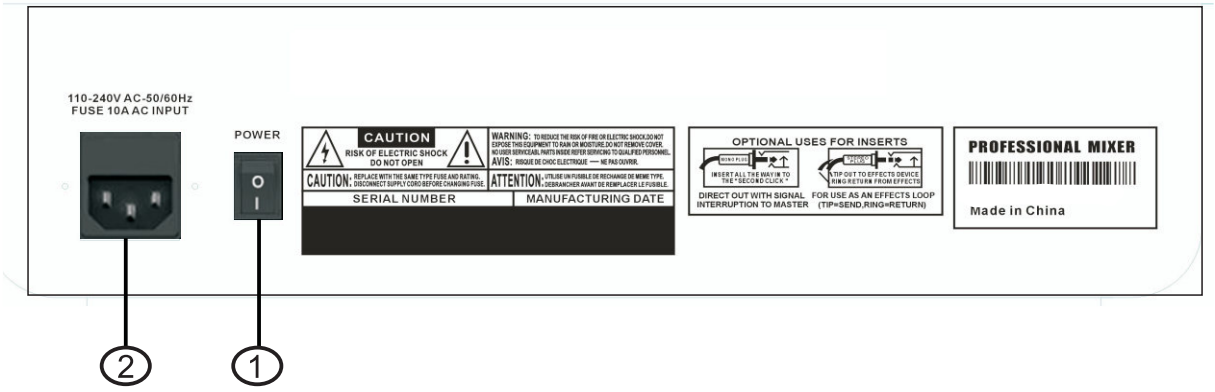

INSTALLATION

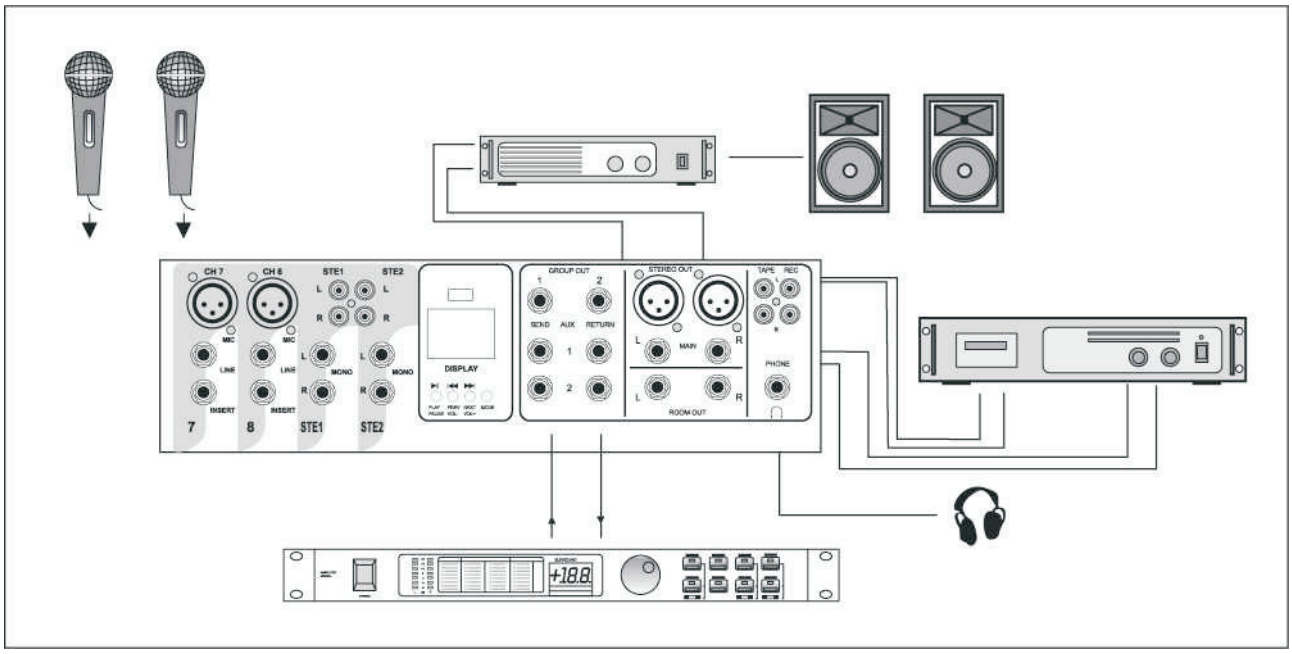

CONNECTIONS

You will need a lot of cables of cables for different purposes-see the following figures to make sure you have got the right ones. Unbalanced equipment may be connected to balanced inputs/outputs. Either use mono 1/4" jacks or connect ring and sleeve of TRS jacks.

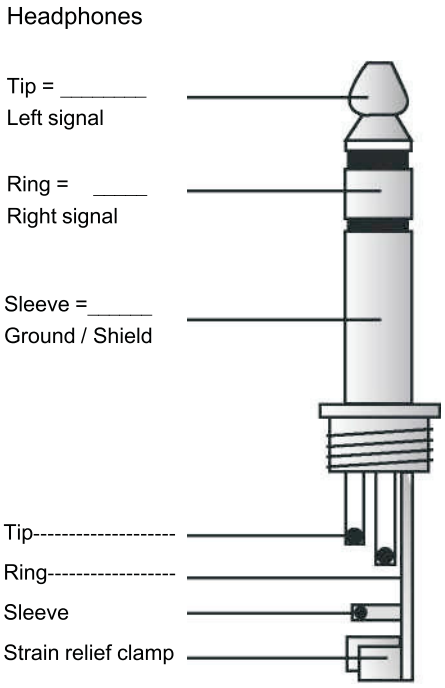

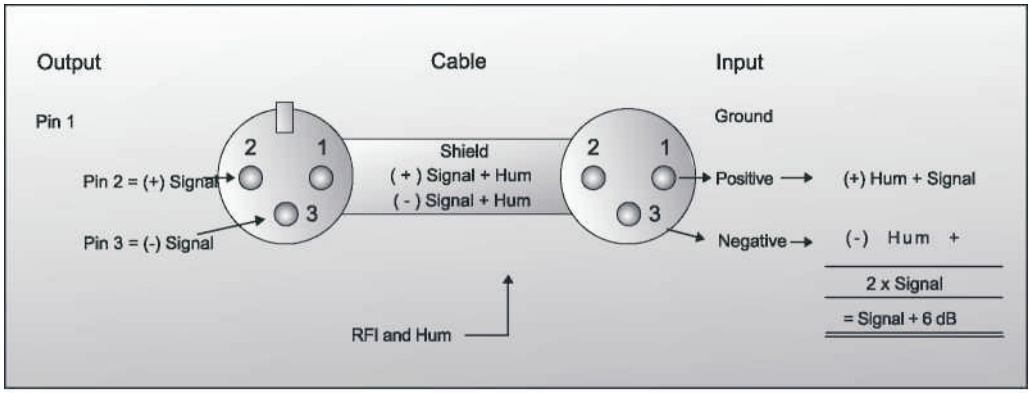

Compensation of interference with balanced connections

CONNECTIONS

Tip =
Signal

Tip = hot
(+ve)

Unbalanced use of mono 1/4" jack plugs

Sleeve =----------
Ground / Shield

Balanced use of stereo 1/4" jack plugs

Ring =—
cold (-ve)

Sleeve = Ground / Shield

For connection of balanced and unbalanced

Tip

Tip

Ring —

Sleeve ----------

Sleeve

Strain relief clamp

Strain relief clamp

plugs, ring and sleeve have to be bridged at the stereo plug.

Balanced use with XLR connectors

Different plug types

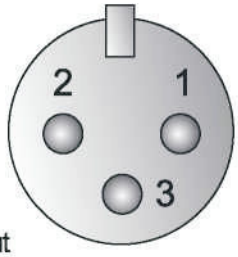

Input

1 = Ground / Shield
2 = hot (+ve)
3 = cold (-ve)

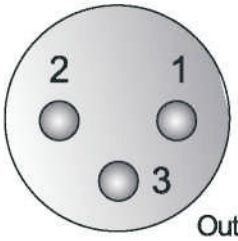

Output

For unbalanced use pin 1 and pin 3 have to be bridged

APPENDIX

Specifications

Mono Inputs

Mic Input	electronically balanced, discrete input configuration
Bandwidth	10 Hz to 60 kHz±3dB
Distortion (THD & N)	0.01% at +4dBu,1 kHz, Bandwidth 80 kHz -129.5 dB ,150 Ohm source -117.3 dBqp, 150 Ohm source -132.0 dB u ,input shorted -122.0 dBqp, input shorted
Mic E.I.N (22 Hz-22 kHz)	
TRIM range	+10dBto +60dB
Line Input	electronically balanced,
Bandwidth	10 Hz to 60 kHz±3dB
Distortion (THD&N)	0.01% at +4 dB u ,1 kHz, Bandwidth 80 kHz +10 dB iito-40dB u
Line level range	
Equalization	
Hi Shelving	12 kHz +/-15dB
Mid Range	2.5 kHz +/-15dB
Lo Shelving	80 Hz +/-15dB

Steroe inputs

Line Input	unbalanced
Bandwidth	10 Hz to 55 kHz 3dB
Distortion (THD & N)	0.01% at +4 dBu, 1 kHz, bandwidth 80 kHz
Equalization	
Hi Shelving	
Mid bell	12kHz +/-15dB
Lo Shelving	100Hz-8KHz +/■ 15dB, Q fixed at 1 oct
Lo Cut (High Pass) filter	80 Hz +/-15 dB, Q fixed 2 oct -3dB at 75Hz, 18dB/oct

Master Mix section

Max Output	+22 dBu balanced
Aux Send Max Out	+22 dBu unbalanced +22 dBu unbalanced
Control Room Out	112 dB, all channels at Unity Gain
Signal-To-Noise Ratio	

Power supply

Mains Voltages	110-240 VAC, 50-60 Hz

Power	8CH 35W	12CH 40W	16CH 42W	24CH 50W

FCC Warning

This device complies with part 15 of the FCC rules. Operation is subject to the following two conditions: (1) this device may not cause harmful interference, and (2) this device must accept any inte rference received, including interference that may cause undesired operation.

Changes or modifications not expressly approved by the party responsible for compliance could void the user's authority to operate the equipment.

NOTE: This equipment has been tested and found to comply with the limits for a Class B digital device, pursuant to part 15 of the FCC Rules. These limits are designed to provide reasonable protection against harmful interference in a residential installation. This equipment generates uses and can radiate radio frequency energy and, if not installed and used in accordance with the instructions, may cause harmful interference to radio communications. However, there is no guarantee that interference will not occur in a particular installation. If this equipment does cause harmful interferenceto radio or television reception, which can be determined by turning the equipment off and on, the user is encouraged to try to correct the interference by one or more of the following measures:

- Reorient or relocate the receiving antenna.
- Increase the separation between the equipment and receiver.
- Connect the equipment into an outlet on a circuit different from that to which the receiver is connected.
- Consult the dealer or an experienced radio/TV technician for help.

Radiation Exposure Statement

This equipment complies with FCC radiation exposure limits set forth for an uncontrolled environment. This equipment should be installed and operated with minimum distance 20cm between the radiator and your body.