User Guide

Disassembled version

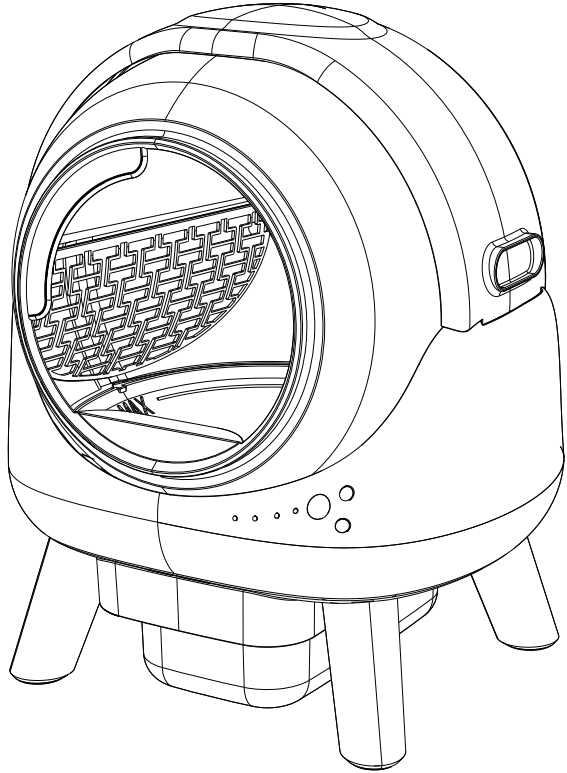

ELSPET GALAXYPOD LITE

For important safety and warranty information,
please see the customer care guide.

www.elspet.com

Elspet GalaxyPod lite

Here are some methods to help facilitate your cat's transition.

- Place the new litter box in the same spot as the old one, add some litter, and make sure the power is off. Give your cat a day or two to explore the new litter box.
- If your cat isn’t showing interest, try enticing them with some catnip or their favorite treats to get them close to the new box.
- Add a bit of litter from the old box to the new one to provide a familiar scent for your cat.
- You can also place food around the litter box so your cat associates rewards with it.
- Once you notice your cat using the new litter box, you can turn on the power for automatic cleaning. Let your cat observe this process; it can help them get used to the sounds and reassure them. After the cycle is complete, turn the machine off again. During this time, it's best not to clean the old litter box.
- If your cat hasn’t used the new litter box after a few days, keep using the old brand of litter in the old box and avoid cleaning it for as long as possible. Cats prefer clean litter boxes, and a dirty one might encourage them to try the clean new litter box.
- When your cat starts using the new litter box and loses interest in the old one, congratulations! Your cat is now comfortable using the automatic litter box!

How to Help Your Cat Accept an Automatic Litter Box.

Safety Instructions

- Please check the accessory list to make sure everything is included.
- Keep this device out of reach of children.
- Always place the machine on a sturdy, flat surface. Avoid soft, uneven, or unstable ground, as this can affect the accuracy of the device's readings.
- If you’re using a litter mat or carpet, place it in front of the device, not underneath it.
- Store the product in a stable, indoor, cool, and dry place, away from direct sunlight to prevent component aging.
- This product is not suitable for outdoor use. It should be in a well-ventilated, dry environment with temperatures between 4-40°C and humidity levels not exceeding 90%, free from corrosive gases.
- Don’t place any other items on top of the product to ensure it operates normally.
- Always unplug the device before doing any maintenance.
- When moving the product, handle it gently to avoid dragging it.
- We recommend using small-grain mixed cat litter. Make sure to empty the compartment and the waste bin promptly when not in use. Avoid immersing the machine in water or placing it in areas where it could get splashed.
- Make sure your cat weighs over1 kg and has a shoulder height of more than 15 cm, so the sensors can accurately recognize them.
- Use only the official accessories to prevent any damage to the machine.
- If you encounter any issues that prevent the product from working, refer to the troubleshooting guide. If the problem persists, please contact our customer service, and we’ll respond as soon as possible.
- In case of an emergency, you can unplug the power and manually open it to resolve the issue.
- The bottom of this product has a weight sensor, so please be careful to lift and place it gently when handling.
- If you experience any problems with the product, don’t hesitate to reach out to us immediately at **help@elspet.com.**

What you have:

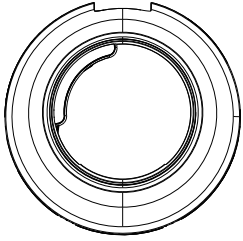

Sphere front

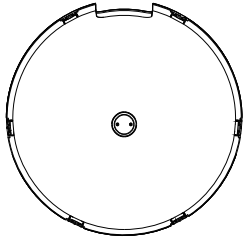

Sphere back

Litter saver

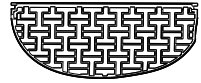

Litter sifter

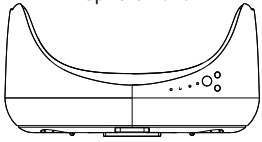

Base

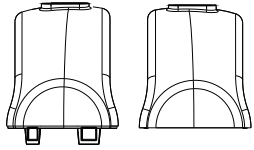

Cover

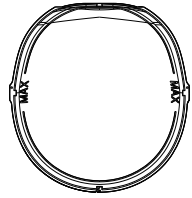

Floor pad

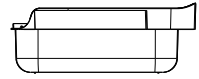

Waste drawer

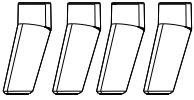

Support Legs

Bracket

Garbage Bag

Power Cord

What you need:

- Wireless router (2.4 GHz)
- High-speed internet connection
- Smartphone

Steps to Install the Litter Box

1 Assemble the Base

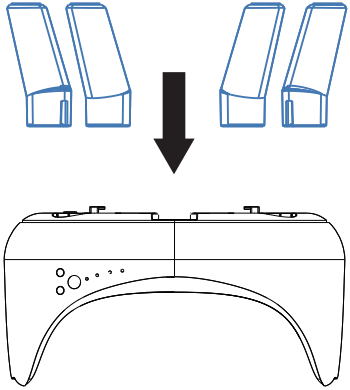

Turn the base upside down and place it on the floor or another flat surface. To prevent scratching the top of the base, you can place a plastic bag underneath it. Then, insert the table legs into the four corner holes at the bottom of the base. After installation, shake the table legs to test them and ensure they a re fully and securely inserted into the holes.

2 Assemble the Axle Holder

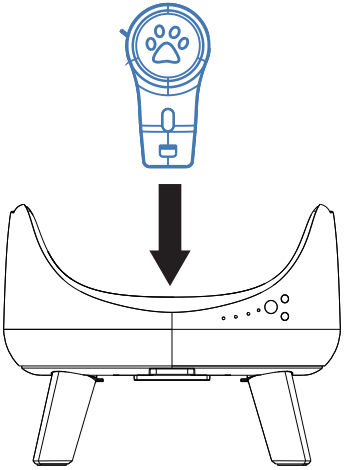

Flip the base right side up and place it flat on the floor. Ensure the base is level and stable. If you notice any wobbling, adjust the position of the table legs as needed. Then, insert the axle holder into the slot at the back of the base.

3 Put on the garbage bag

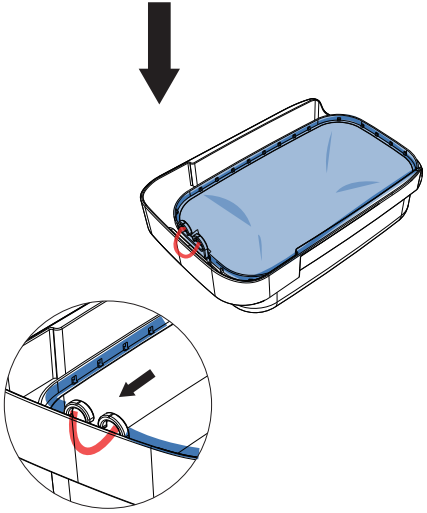

Place the included garbage bag inside the waste bin. Secure the front drawstring of the garbage bag into the slot at the front of the waste bin.

4 Assemble the Waste Bin

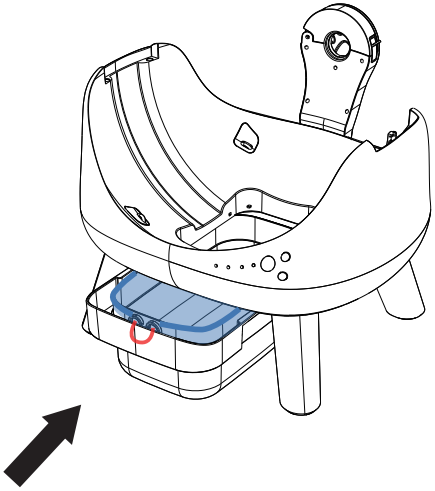

Then, insert the waste bin into the base of the machine.

5 Fixed drum back

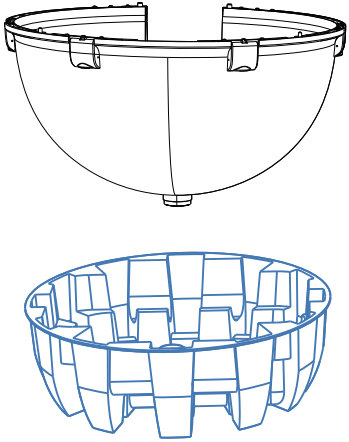

Take out the product protection paper holder that comes with the package

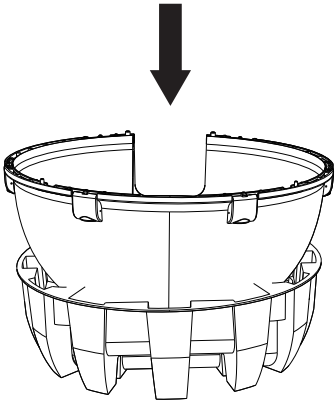

Hold the back of the ball compartment on the paper holder

6 Assemble the Litter saver

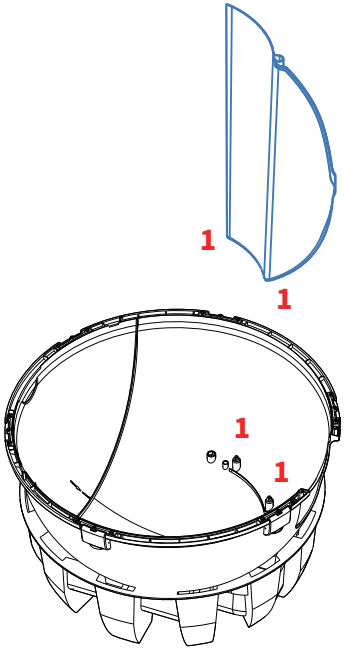

Take out the litter saver
Find the position marked with "1"
on the litter saver
and align it with the position marked "1"
on the rear half of the sphere back.

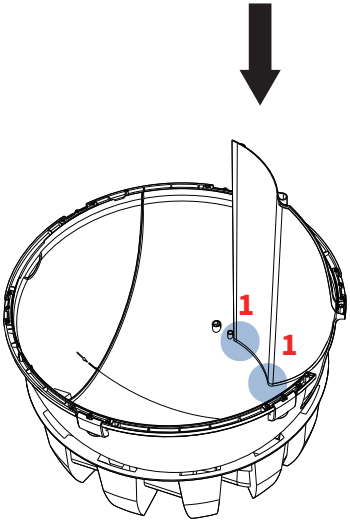

lign the litter saver marked with "1" and secure it.
Insert the divider into the sphere back.

7 Assemble the Floor pad

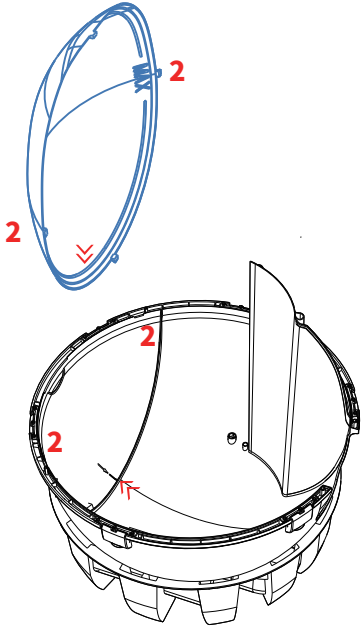

Take out the floor pad.
Find the position marked with "2" on the Floor pad
and align it with the position marked "2" on the rear half of the ball chamber.

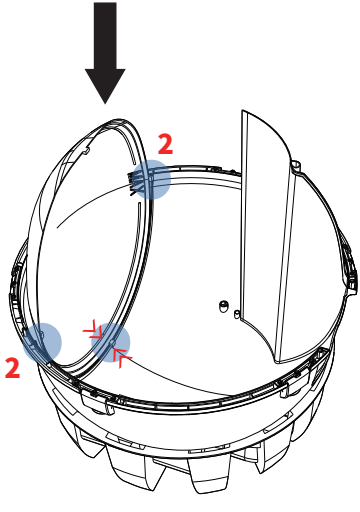

Align the position marked with "2" and clip it in place.
Insert the floor pad into the groove of the the sphere back.
Note: Make sure the floor pad falls into the slots on both sides at the back (⌄⌄ position) to secure it in place.

8 Connect the Front and Back of the Sphere

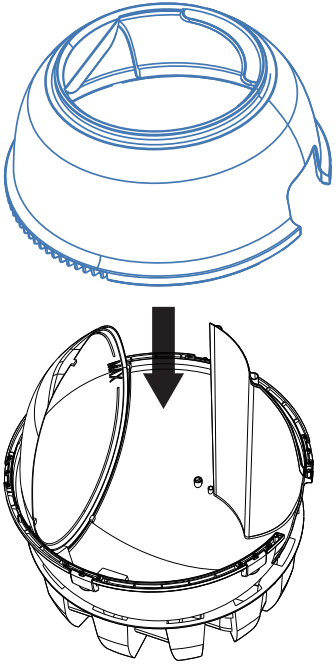

Place the sphere front onto the rear half.
Align the Sphere back between
 the front and rear ball chambers.

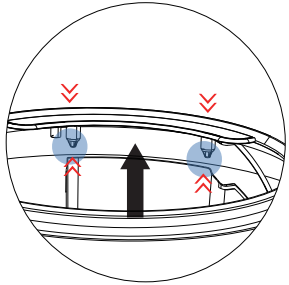

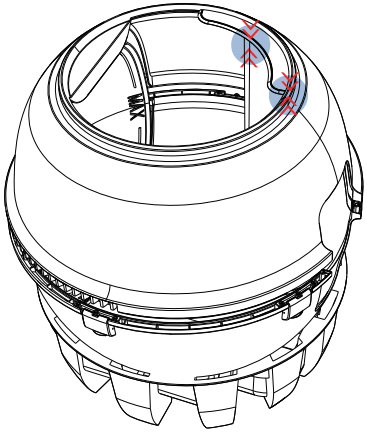

Find the "⌄⌄" label on the other end of
the baffle from the top,
and align it with the "⌄⌄" label inside the
sphere front.
Align the "⌄⌄" labels and clip them in place.

9 Close the front and rear clips of the drum.

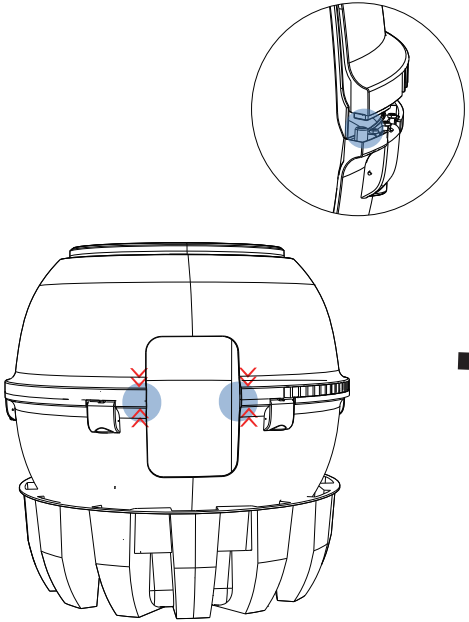

Find the position marked with "⩔" on the side opening.
Align it with the position marked with " ⩔ " on the front and rear parts of the drum.
Align and clip them in place to close the front and rear drum components.

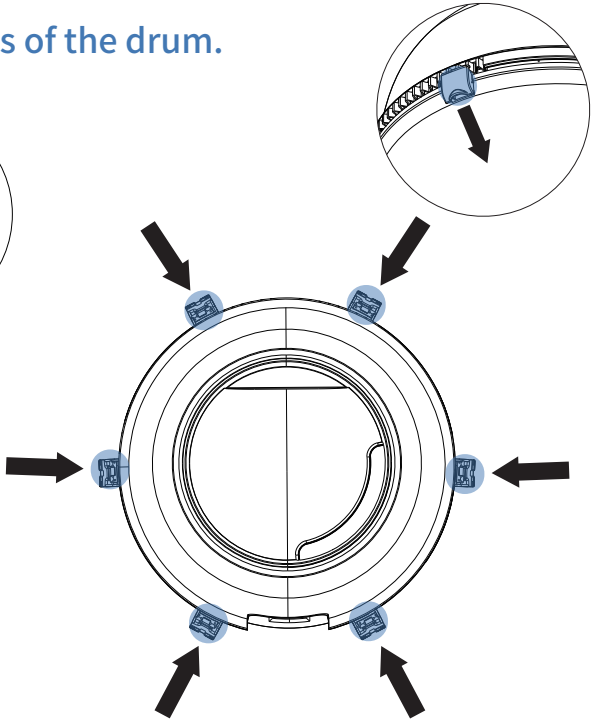

Fasten the 6 clips around the sphere chamber one by one.
Lift the clips to hook them onto the connecting shaft, then close them downward.
You will hear a "click" sound when they are securely fastened.
Check for any looseness, as it may affect functionality.

10 Assemble the Litter sifter

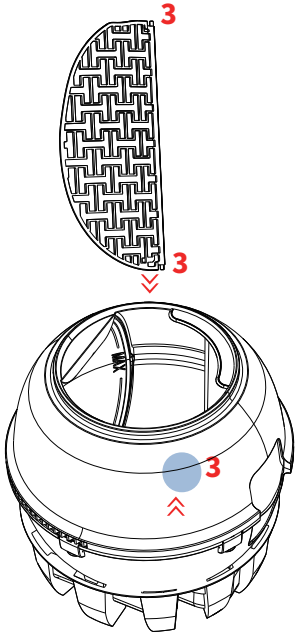

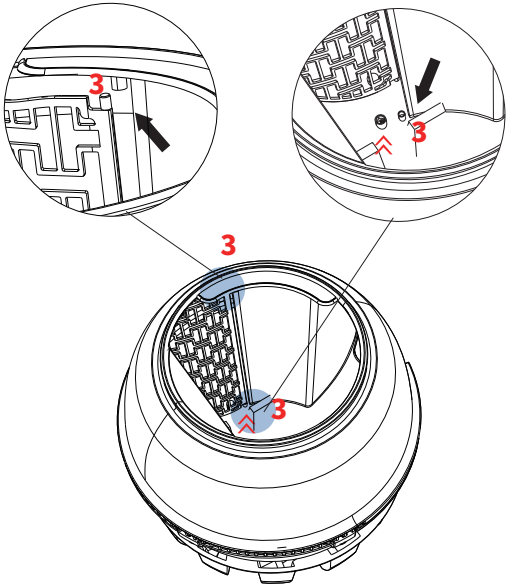

Take out the litter sifter.Find the positions marked with "3" on both sides of the mesh,and the position marked with " ⌄⌄ " on one side of the mesh. Find the position marked with "3" inside the sphere,and the position marked with " ⌄⌄ " inside the sphere.

First, attach the clip on the outer side of the mesh. Then, attach the clip on the inner side of the mesh. When installing the inner side, align the magnetic area with the " ⌄⌄ " position first.
Note: The mesh is flexible, so it can be slightly bent for easier installation.

11 Assemble the Sphere

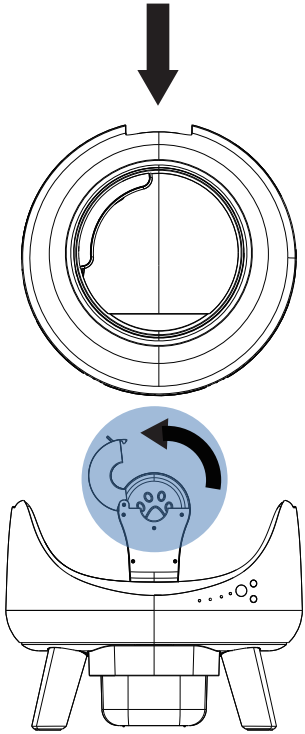

Open the lock on the axle holder at the back of the base.

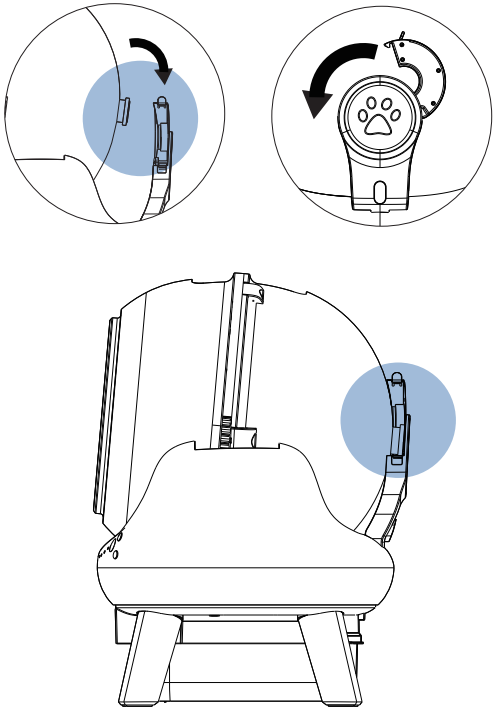

Note: During installation, first align the round knob on the back of the sphere with the open axle support, then place the sphere into the base. Once positioned, close the axle support latch to secure it

12 Attach the Cover

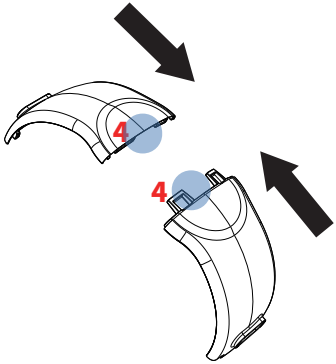

Take out the two top covers. Locate the position labeled "4" on the top covers, align them, and assemble the top covers securely.

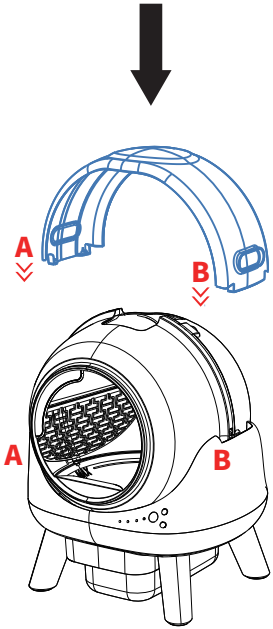

Locate the positions labeled "A" and "B" on the top covers and the corresponding positions labeled "A" and "B" on the base.

13 Assemble the Cover

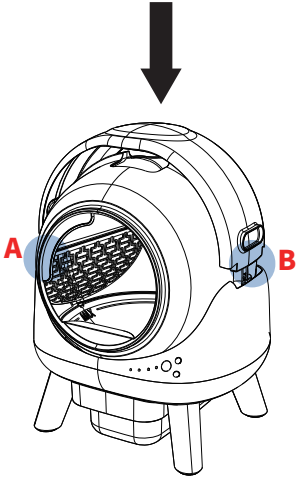

Align the corresponding "A" and "B" positions on the top cover and the base, and then attac h the top cover to the assembled body.

14 Power on the machine

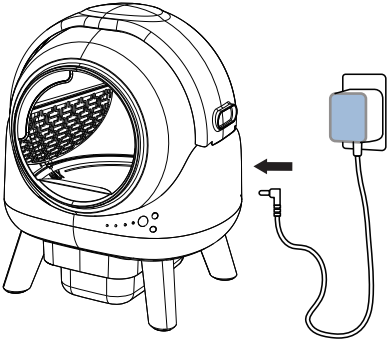

Place the assembled machine in a dry, flat location, near a power outlet and within the range of your home Wi-Fi. Connect the power adapter to the power socket on the back of the base. Once the machine is powered on, it will start a self-checking program. The sphere will Automatically rotate a few turns and then return to the starting position, indicating that the self-check is complete. This entire cycle takes about 2 minutes.

Important: If your cat is too young, please enable "Kitten Mode" until she is at least 1 kg and 6 months old, then switch back to normal automatic cleaning mode.

Reset after the initial addition of cat litter

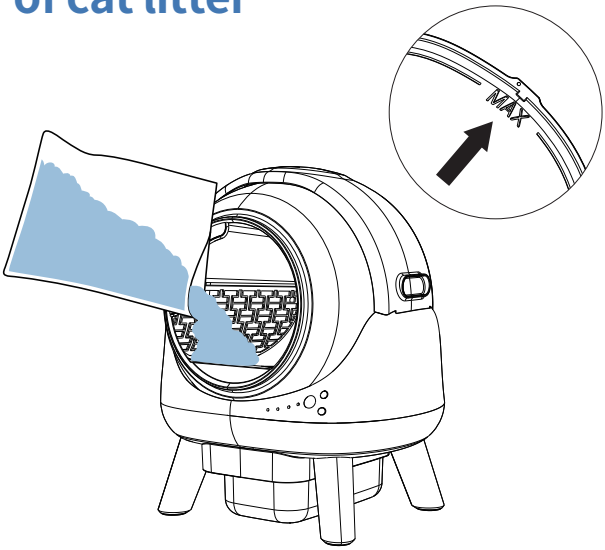

1.Add new litter to the sand basin up to the MAX line.
2.Press and hold the "Clean" button for 3 seconds; the display will show "A."
3.After "A" goes out, the litter weight reset is successful.

Note: The litter weight must be reset every time new litter is added, otherwise the machine may misjudge the object and stop working.

Connect the Litter Box App to Wi-Fi

1.Scan the QR code to download the app.
2.Search for "elspet" in the Apple App Store.
3.Search for "elspet" in Google Play.
Open the app, register an account, and follow the prompts to proceed.

Note: Only 2.4 GHz Wi-Fi can be used for the connection.It is recommended not to use special characters in the password, as it may affect the connection.

Press and hold the Wi-Fi button on the litter box for 3 seconds to enter pairing mode. The Wi-Fi light will start flashing. Follow the instructions in the app to add the litter box. Once the litter box is successfully connected to Wi-Fi, the Wi-Fi light will remain on.

Operating Instructions

Once the litter box is connected to the app, you can start using it. The operating instructions are as follows:

- When the cat enters the litter box, the weight sensor will detect your cat. When the sensor detects a weight change of over 1kg, the indicator light will turn on.
- When your cat stays in the sphere compartment for more than 10 seconds and then leaves, the cat entry indicator light will start to flash, indicating that the litter box has automatically entered the clumping waiting state.
- The waiting time for clumping is designed to allow the litter to absorb moisture and form clumps better. You can adjust the duration flexibly in the app based on the type of litter you are using. The default setting is 2 minutes. During this time, if the cat enters the litter box again, the clumping timer will reset.
- Once the timer ends, the cleaning cycle will begin, lasting approximately 2 minutes.
- During this time, if your cat enters the litter box, the litter box will stop working due to weight detection. It will automatically resume the cleaning operation 5 seconds after the cat leaves.
  If you wish to pause the cleaning cycle, press the clean button, and the display will show "0."

Operating Modes

Kitten Protection

We use weight sensing to determine if a cat has entered the litter box. If your cat is under 1kg or is particularly curious, we recommend enabling Kitten Mode. In this mode, the litter box will not clean automatically, and you can manually control the cleaning time.

Anti-Jam Protection

To better protect your cat's safety, the litter box will stop its current operation when the weight sensor detects a weight change of over 1 kg.
We have designed infrared sensors at the waste outlet; if your cat, out of curiosity, pokes its head into the waste outlet during the cleaning cycle, the sphere compartment will immediately stop rotating and return to the maximum opening position to prevent trapping the cat. After sensing that the cat has left for 5 seconds, the litter box will resume the cleaning cycle.

Sleep Mode

Enabling Sleep Mode allows you to enjoy a quiet sleeping environment. When Sleep Mode is activated, the display will show "P." The litter box will remain powered on, but it will not automatically clean after the cat uses it; cleaning can only be controlled manually. Once Sleep Mode ends, it will enter the cleaning mode for a unified clean. The default time for Sleep Mode is from 10:00 PM to 7:00 AM. You can adjust the time range through the app.

Child Lock Mode

The app can enable Child Lock mode, which locks the buttons on the control panel to prevent accidental touches that could lead to safety issues. When locked, the display will show "L." Once Child Lock is activated, the buttons will not respond. In case of an emergency, you can simply unplug the power to address the situation.

Button Indicator Light

The indicator lights on the litter box control panel display the system status and provide some functional operations:

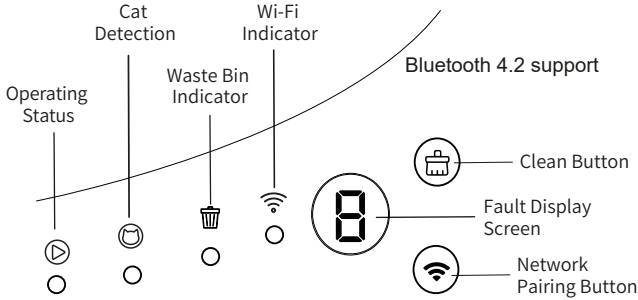

Indicator Light	Content
Operating Status	**Solid Light：** Standby **Flashing Light：** During Cleaning Cycle
Cat Detection	**Off:** No cat detected entering **Flashing:** Waiting for clumping **Solid Light:** Cat detected entering
Waste Bin Indicator	**Off:** Waste bin is normal **Solid Light:** Waste bin is full
Wi-Fi Indicator	**Off:** Not connected to Wi-Fi **Flashing:** Matching network **Solid Light:** Connected to Wi-Fi

Fault display screen	Content
0	Pause status during cleaning process. (Normal operating mode display is off.)
A	Resetting litter weight.After adding new litter, press and hold the clean button for 3 seconds.Once the weight is reset, "A" will display for **5 seconds** and then turn off.
L	"Child Lock Function" is enabled, and the panel buttons are locked.
P	"Sleep Mode" is enabled; the litter box will not automatically enter the cleaning cycle during the set time, but manual cleaning can be performed through the panel buttons and the app.

Button	Operating Instructions
Clean Button	**One-Touch Waste Removal:** Press for 1 second. This manually initiates the cleaning cycle. Press again to exit the cleaning cycle. **Reset Litter Weight:** Press and hold for 3 seconds. After adding new litter, press and hold for 3 seconds to recalibrate the litter weight.
Wi-Fi Pairing Button	Press and hold this button for **3 seconds** to enter pairing mode.

Note: The Fault display screen shows only one indicator at a time, with the following priority: "1" > "2" > "3" > "4" > "A" > "0" > "L" > "p"
Bluetooth control function is being developed, Please hope.

Reset after daily addition of cat litter

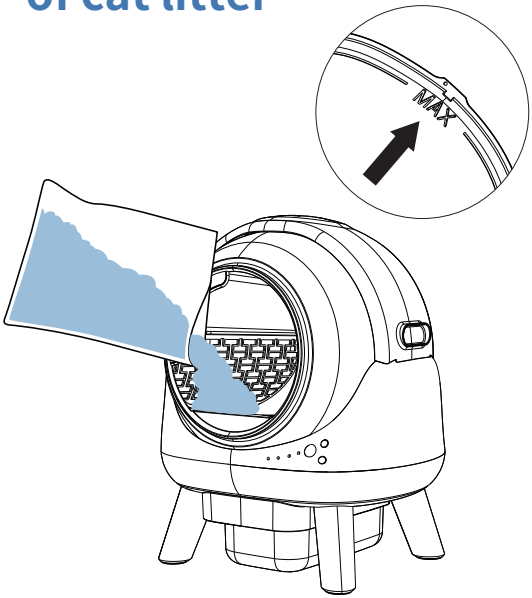

1.Add new litter to the sand basin up to the MAX line.
2.Press and hold the "Clean" button for 3 seconds; the display will show "A."
3.After "A" goes out, the litter weight reset is successful.

Note: The litter weight must be reset every time new litter is added, otherwise the machine may misjudge the object and stop working.

Clean the trash bag

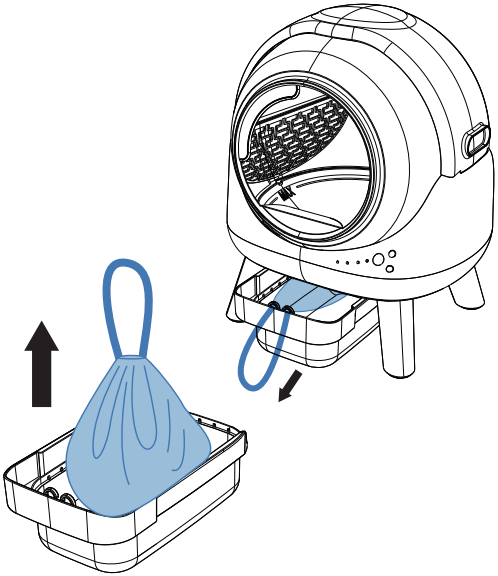

Remove the waste bin, then tighten the drawstring.
Take out the trash bag and dispose of it in the trash can.
Place a new trash bag inside the waste bin, then insert it back into the base of the machine.

Disassembled cleaning

1 Disconnect the Power

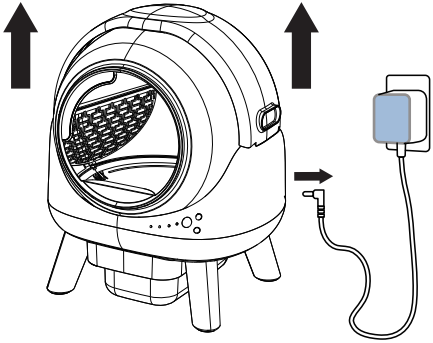

Unplug the litter box and disconnect the power adapter, then remove the top cover.
Important: When replacing the cover, make sure the letters on the cover's sticker correspond to the letters on the base's sticker. Do not install it backwards, as this may damage the cover.

2 Disassemble the Components

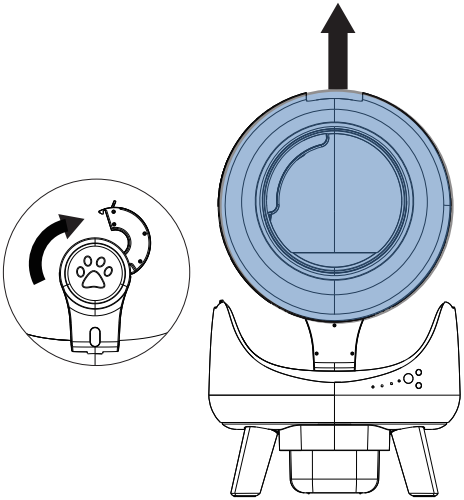

Open the latch on the back of the sphere and lift the sphere off the base.

3 Clean the remaining cat litter inside the sphere

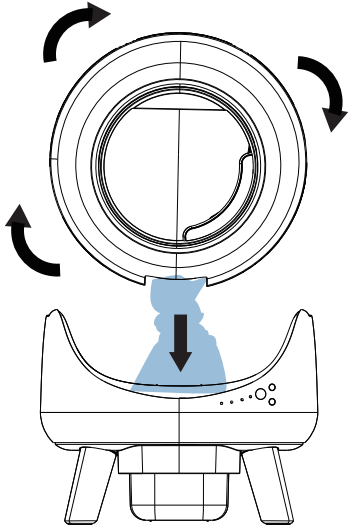

Rotate the sphere, position the top opening facing down,align it with the waste bin opening on the base,and pour out the remaining cat litter.

4 Clean the waste drawer

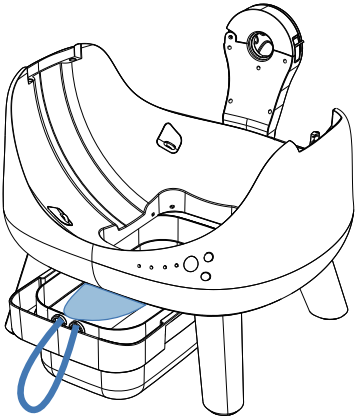

Remove the waste drawer, then tighten the drawstring.Take out the trash bag and dispose of it in the trash can.
Place a new trash bag inside the waste bin, then insert it back into the base of the machine.

5 Disassembled Sphere

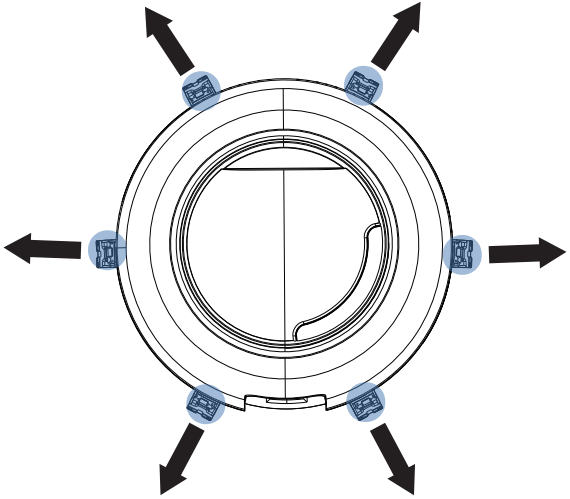

Open the 6 clips around the sphere's outer ring

6 Remove the component

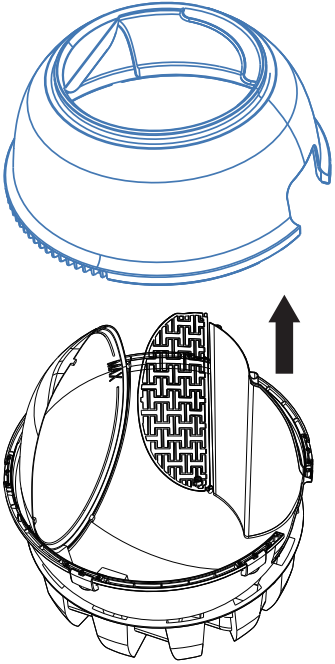

Separate the sphere front and the sphere back
remove the accessories inside

5 Clean the Components

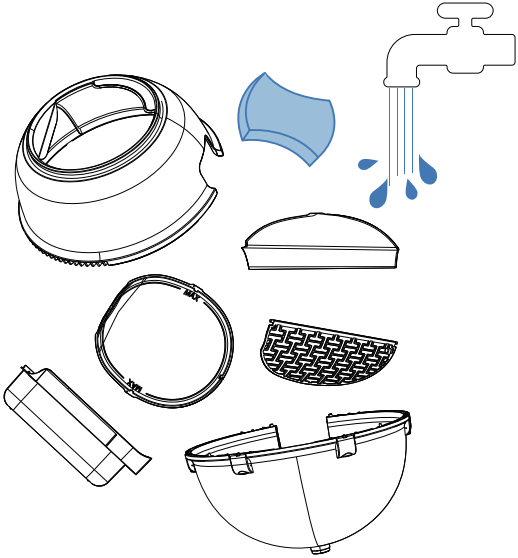

Clean the components with warm soapy water.
Wipe both the interior and exterior surfaces with a cloth or sponge.
Important: Do not use bleach or chemicals for cleaning

6 Cleaning part

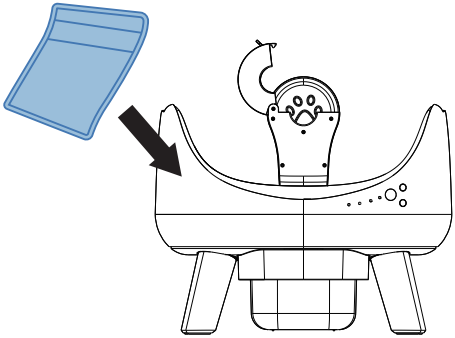

Important Notice: The base contains electronic components of the litter box and is not waterproof. Do not rinse the base directly, do not immerse it in water, and do not spray any cleaning solutions.
Use a dry cloth or a slightly damp cloth to wipe the base.
It is recommended to clean the black dustproof silicone plug on the base every two weeks.

Precautions for disassembly washing and assembly

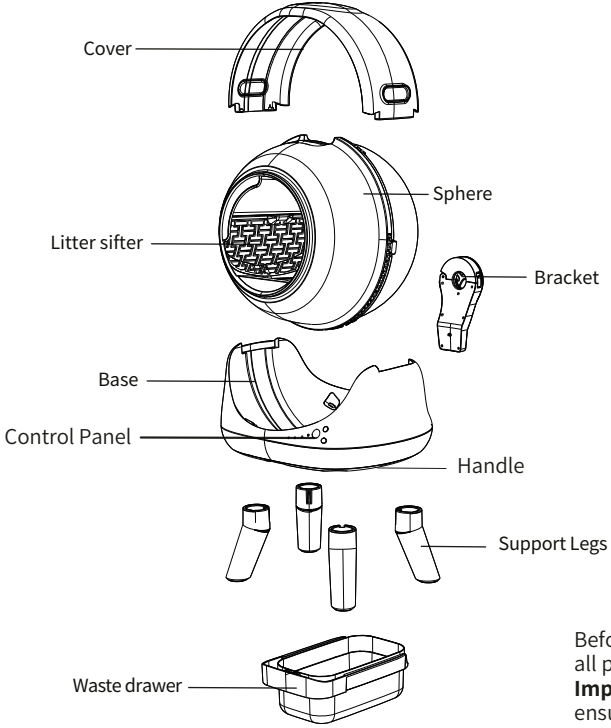

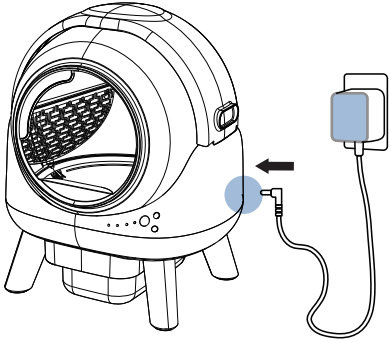

Before reassembling the waste bin, make sure all parts are completely dry.
Important: When installing the components, ensure they correspond to the labeled indicators. Incorrect installation may lead to damage to the parts.

Troubleshooting

1. '1' Error (Cat Protection)

(1)Check if there are any obstructions at the waste outlet of the base. (2) Wipe the sensor at the waste outlet with a clean cloth.

2. '2' Error (Top Cover Abnormality)

(1) Check for any obstructions at the junction between the top cover and the base. (2) Check if any of the four magnets on the top cover are missing.

3. '3' Error (Motor Abnormality)

(1) Disconnect the power adapter and wait 30 seconds before powering it back on. (2) Check for any obstructions between the ball chamber and the base gears.
(3) Ensure the ball chamber is properly seated on the base, with equal gaps on both sides.”

4. '4' Error (Ball Chamber Abnormality)

(1) Disconnect the power adapter and wait 30 seconds before powering it back on.
(2) Reinstall the ball chamber to the home position, then press the clean button again.

5. The 'Cat Entry Indicator Light' does not light up after the cat enters.

(1) Ensure your cat weighs more than 1kg.
(2) Once your cat has exited, press and hold the 'Clean' button for 3 seconds; when 'A' turns off, the weight reset is successful.

6. After the cat leaves, the 'Cat Entry Indicator Light' does not flash and the clumping does not start.

If your cat spends less than 10 seconds using the litter box, the device does not recognize it as a visit. (2) Check if the 'Kitten Mode' feature is activated in the app.

7. When there is no cat in the device, the 'Cat Entry Indicator Light' stays lit(No reset of litter weight).

(1) Press and hold the 'Clean' button for 3 seconds. When 'A' goes out, the weight has been successfully reset.
(2) Make sure to reset the litter weight each time you add new litter.

8. The 'Waste Bin Full Indicator Light' stays lit.

(1) Check if the waste bin is full. (2) Waste may be piled to one side of the bin, triggering the sensor; you can use a rake to level the waste.
(3) Check if there are any obstructions blocking the waste outlet at the base. (4) Wipe the sensor at the waste outlet with a clean cloth.

9. The ball chamber flips over and does not return to its original position automatically.

(1) Check if the 'cat entry indicator light' is lit; if it is, then exclude 'Fault 7.' (2) Check for 'Faults 1' and '8.

Product Information

Product Name		Cat Litter Box
Product Size	Whole	580*560*535mm
	Split	600*575*380mm
Weight		＜8kg
Litter Box Capacity		4L
Waste Bin Capacity		8L
Model		4073B
Noise		<55dB@1m
Brand Information		Jiangsu Erlangshen Plastic Co., Ltd.
Manufacturer Address		3A, Enterprise Park, Daqiao Town, Yangzhou City, Jiangsu Province, China

Warranty Terms

Safety Standards and Certification Authority		FCC/ROHS/CE-RED/RCM
Rated Values of the Complete Machine	Rated Voltage（V）	DC12V
	Rated Frequency（Hz）	/
	Rated Power(W)	5W

The circumstances beyond the warranty rangeinclude but are not limited to:

- The lack of effective invoices or the service term is expired.
- Damages caused by product use, maintenance and storage that donot comply with the requirements stipulated in the user manual.
- Damages caused by majeure factors such as fire hazards,thunderstorms, and floods.
- Unmatched product model or serial No. between that on the warrantycard and that of the actual product.
- Damages caused by service providers unauthorized by elspet duringthe disassembly and maintenance
- Normal color fading, abrasion and consumption during the use of theproduct.
- Damages caused by the improper use of human beings or pets.

FCC Warning

This device complies with part 15 of the FCC Rules. Operation is subject to the following two conditions: (1) This device may not cause harmful interference, and (2) this device must accept any interference received, including interference that may cause undesired operation.

Any Changes or modifications not expressly approved by the party responsible for compliance could void the user's authority to operate the equipment.

Note: This equipment has been tested and found to comply with the limits for a Class B digital device, pursuant to part 15 of the FCC Rules. These limits are designed to provide reasonable protection against harmful interference in a residential installation. This equipment generates uses and can radiate radio frequency energy and, if not installed and used in accordance with the instructions, may cause harmful interference to radio communications. However, there is no guarantee that interference will not occur in a particular installation. If this equipment does cause harmful interference to radio or television reception, which can be determined by turning the equipment off and on, the user is encouraged to try to correct the interference by one or more of the following measures:

-Reorient or relocate the receiving antenna.

-Increase the separation between the equipment and receiver.

-Connect the equipment into an outlet on a circuit different from that to which the receiver is connected.

-Consult the dealer or an experienced radio/TV technician for help.

This equipment complies with FCC radiation exposure limits set forth for an uncontrolled environment. This equipment should be installed and operated with minimum distance 20cm between the radiator & your body.