RAYTAC 勁達國際電子有限公司
Raytac Corporation
www.raytac.com Tel: +886-2-3234-0208 Mail: service@raytac.com

Version: L
Issued Date: 2023/05/24

Approval Sheet

(產品承認書)

產品名稱 (Product) Bluetooth Low Energy Module

解決方案 (Solution) Nordic nRF52840 aQFN Package

產品型號 (Model No.) **MDBT50Q – 1MV2** (Chip Antenna)

MDBT50Q – P1MV2 (PCB Antenna)

產品料號 (Part No.) see *4.3 Order Code*

Model	Working distance (in Meters)			Operating Temperature
	125 Kbps	1 Mbps	2 Mbps	
MDBT50Q-1MV2	over 550	over 300	over 150	-40 ~ 85℃
MDBT50Q-P1MV2	over 450	up to 250	up to 120	-40 ~ 85℃

Working range is tested in open space

Index

1. Overall Introduction 4
1.1. Application 4
1.2. Features 5

2. Product Dimension 7
2.1. PCB Dimensions & Pin Indication 7
2.2. Recommended Layout of Solder Pad 9
2.3. RF Layout Suggestion (aka Keep-Out Area) 11
2.4. Footprint & Design Guide 13
2.5. Pin Assignment 14
2.6. GPIO Located Near the Radio 17

3. Main Chip Solution 17

4. Shipment Packaging Information 18
4.1. Marking on Metal Shield 19
4.2. Packaging Info 20
4.3. Order Code 22

6. Block Diagram 30

7. Antenna 31
7.1. MDBT50Q 31

8. Reference Circuit 35
8.1. Reg0 DC/DC Enabled 36
8.2. Reg0 LDO Mode 38
8.3. Reg0 DC/DC and LDO Mode Disabled 40
8.4. USB Powered 42
8.5. USB Disabled 46

1. Overall Introduction

Raytac's MDBT50Q & MDBT50Q-P is a BT 5.2 stack (Bluetooth low energy or BLE) module designed based on **Nordic nRF52840 SoC solution**, which incorporates: **GPIO**, **SPI**, **UART**, **I2C**, **I2S, PMD, PWM, ADC**, **NFC** and **USB** interfaces for connecting peripherals and sensors.

Features:

1. Embedded 2.4GHz transceiver supports Bluetooth 5.2 (Bluetooth), IEEE 802.15.4 (THREAD & Zigbee) & 2.4Ghz RF & ANT+ upon customer's preference.
2. Compact size with (L) 15.5 x (W) 10.5 x (H) 2.05 or 2 mm.
3. Low power requirements, ultra-low peak, average and idle mode power consumption.
4. Be compatible with a large installed base of mobile phones, tablets and computers.
5. Fully coverage of BLE software stack.
6. BLE & RF transmission switching helps products fit all operation system and most hardware.

1.1. Application

- IoT Networks
  - Smart home (such as door locks, lighting) sensors and controllers
  - Smart city sensor networks
  - Industrial IoT sensors and controllers
  - Connected white goods
- Personal Area Networks
  - Health / fitness sensor and monitor device
  - Medical device
- Interactive entertainment devices
  - Advanced remote controls
  - Gaming controller
- Advanced wearables
  - Connected watches
  - Advanced personal fitness devices
  - Wearables with wireless secure payment
  - Connected Health
  - Virtual/Augmented Reality applications
- High performance HID Controllers
- Mesh Network

1.2. Features

- Bluetooth 5, IEEE 802.15.4, 2.4 GHz transceiver
    - -95dBm sensitivity in 1Mbps Bluetooth low energy (BLE) mode
    - -103dBm sensitivity in 125Kbps BLE mode (long range)
    - +8 dBm TX power (down to -20 dBm in 4 dB steps)
    - On-air compatible with nRF52, nRF51, nRF24L and nRF24AP Series
    - Programmable output power from +8dBm to -20dB
    - RSSI (1dB resolution)
    - Supported data rates:
        - Bluetooth 5: 2 Mbps, 1 Mbps, 500 kbps, 125 kbps
        - IEEE 802.15.4-2006: 250 kbps
        - Proprietary 2.4 GHz: 2 Mbps, 1 Mbps
- ARM Cortex –M4 32-bit processor with FPU, 64 MHz
- Memory: 1MB flash / 256KB RAM
- HW accelerated security
    - ARM TrustZone Cryptocell 310 security subsystem
    - 128 bit AES / ECB / CCM / AAR co-processor (on-the-fly packet encryption)
- Advanced on-chip interfaces
    - USB 2.0 full speed (12Mbps) controller
    - QSPI 32MHz interface
    - High speed 32MHz SPI
    - Type 2 near field communication (NFC-A) tag with wake-on field
    - Programmable peripheral interconnect (PPI)
    - 48 general purpose I/O pins
    - EasyDMA automated data transfer between memory and peripherals.
- 12 bit, 200ksps ADC – 8 configurable channels with programmable gain
- 4 x 4 channel pulse width modulator (PWM) units with EasyDMA
- Audio peripherals : I2S, digital microphone interface (PDM)
- 5 X 32-bit timers with counter mode
- Up to 4 x SPI masters / 3 x SPI slaves with EasyDMA
- Up to 2 x I2C compatible 2-wire masters / slaves
- 2 x UART(CTS/RTS) with EasyDMA
- Quadrature decoder (QDEC)
- 3 x 24-bit real-time counters (RTC)

- Flexible power management
    - Supply voltage range 1.7V to 5.5V
    - On-chip DC/DC and LDO regulators with automated low current modes
    - Regulated supply for external components from 1.8V to 3.3V
    - Automated peripheral power management
    - Fast wake-up using 64MHz internal oscillator
    - 0.4uA at 3V in System OFF mode, no RAM retention
    - 1.5uA at 3V in System ON mode, no RAM retention, wake on RTC
- Nordic SoftDevice ready and with support for concurrent multi-protocol

RAYTAC

2. Product Dimension

2.1. PCB Dimensions & Pin Indication

- **MDBT50Q-1MV2**

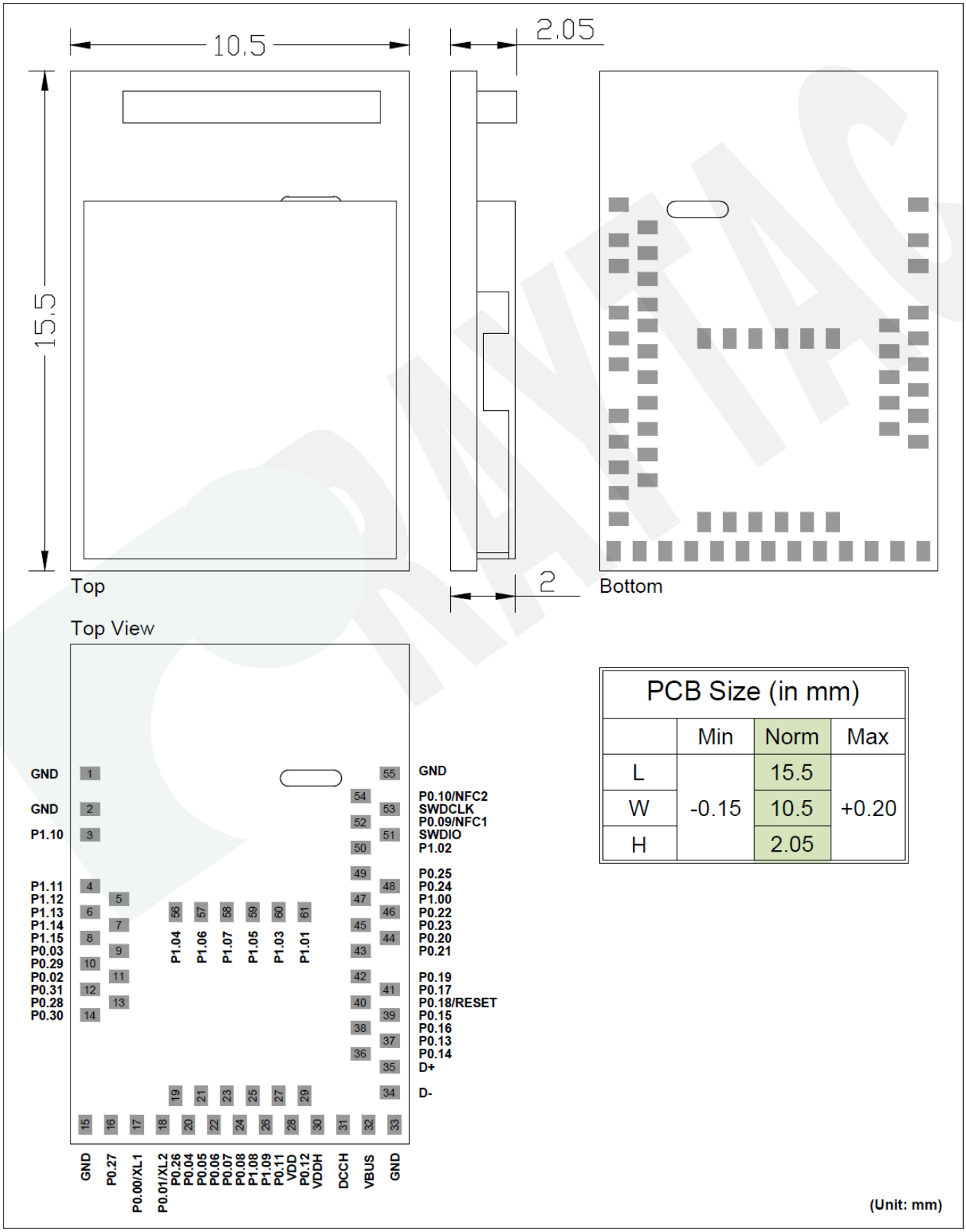

PCB Size (in mm)			
	Min	Norm	Max
L	-0.15	15.5	+0.20
W		10.5	
H		2.05	

2.2. Recommended Layout of Solder Pad

Graphs are all in Top View, Unit in mm.

Top View

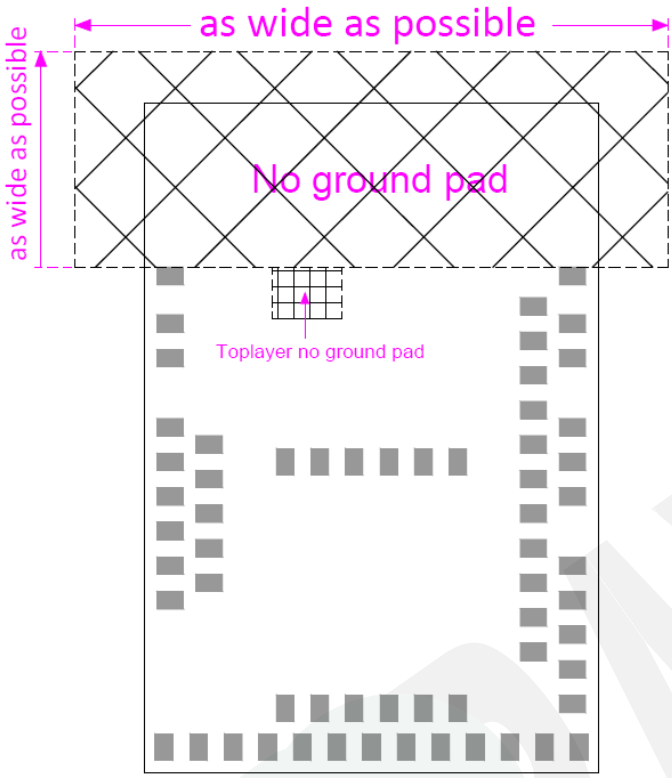

Top View (Unit: mm)

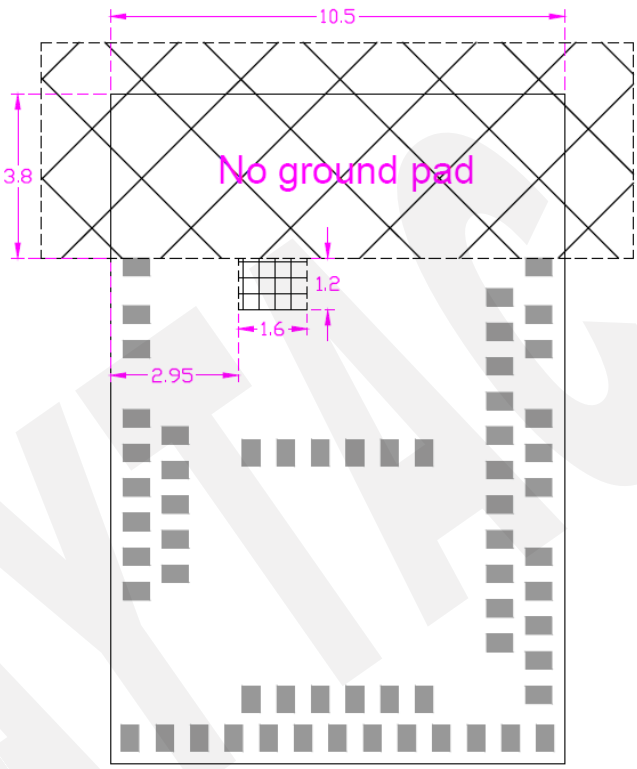

No ground pad (as wide as possible)

Toplayer no ground pad

Top View (Unit: mm)

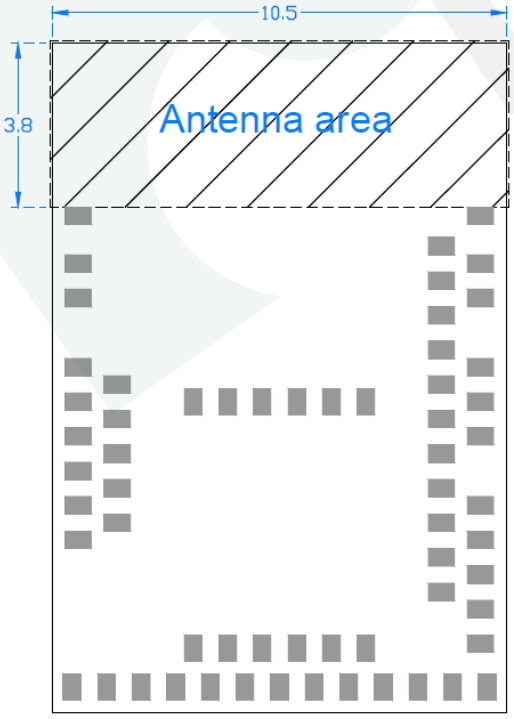

Antenna area

Top View (Unit: mm)

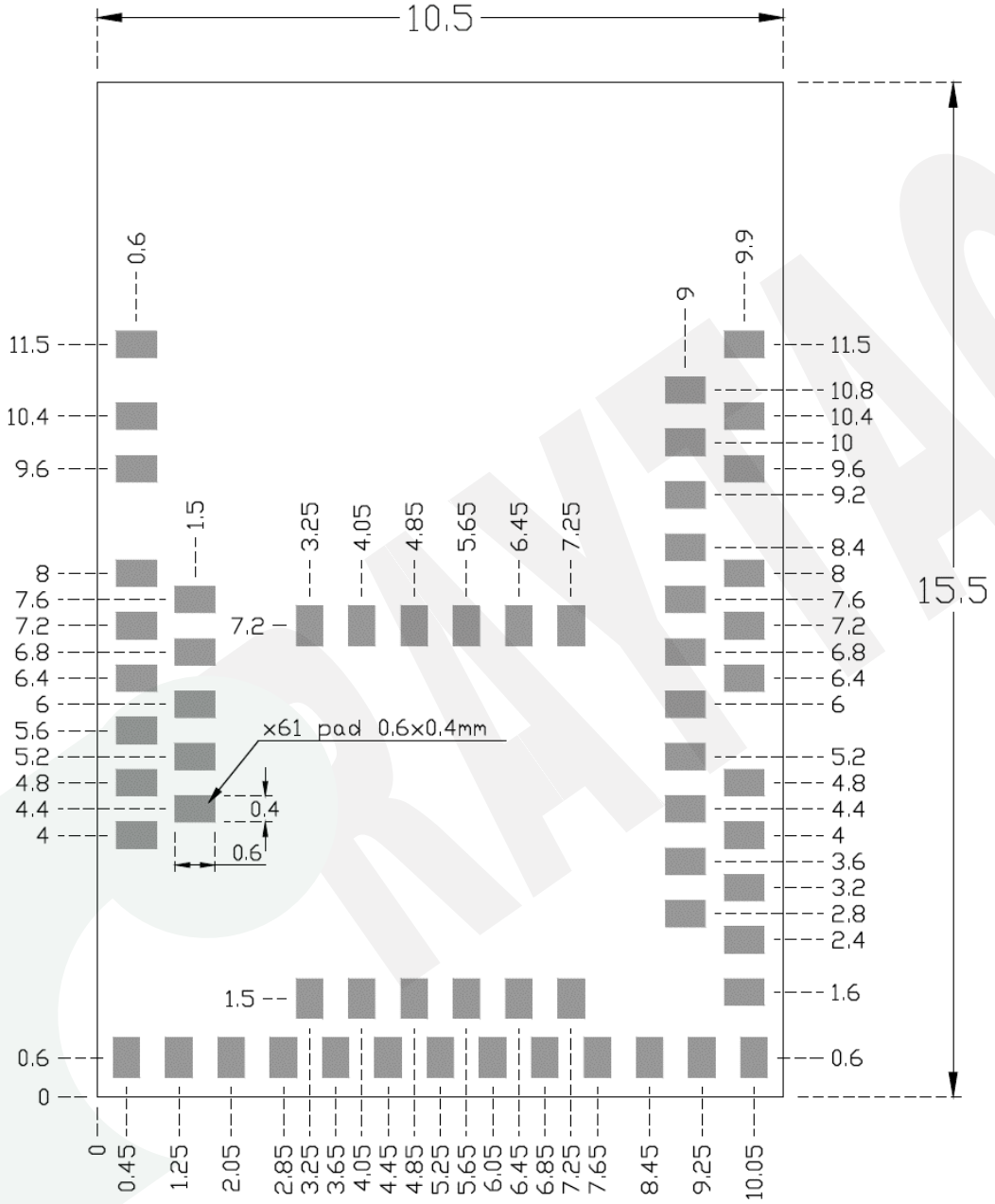

2.3. RF Layout Suggestion (aka Keep-Out Area)

Make sure to keep the “No Ground Pad” as wider as you can regardless of the size of your PCB.

No Ground Pad should be included in the corresponding position of the antenna in **EACH LAYER**.

Place the module towards the edge of PCB to have better performance than placing it on the center.

Welcome to send us your layout in PDF for review at service@raytac.com or your contact at Raytac with title “Layout reviewing – Raytac Model No. – YOUR company’s name”.

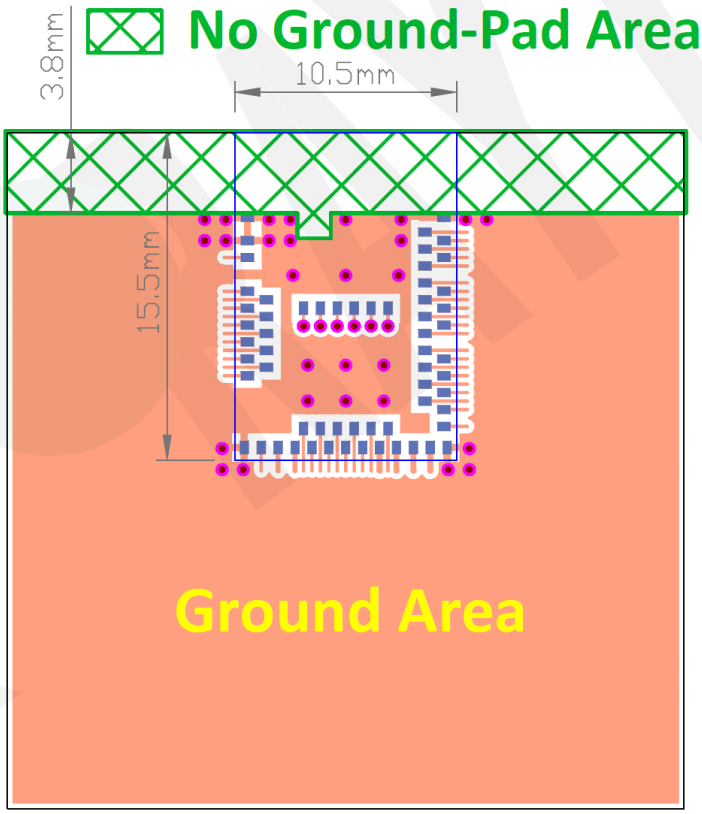

Top View

Please add via holes in GROUND area as many as possible, especially around the four corners.

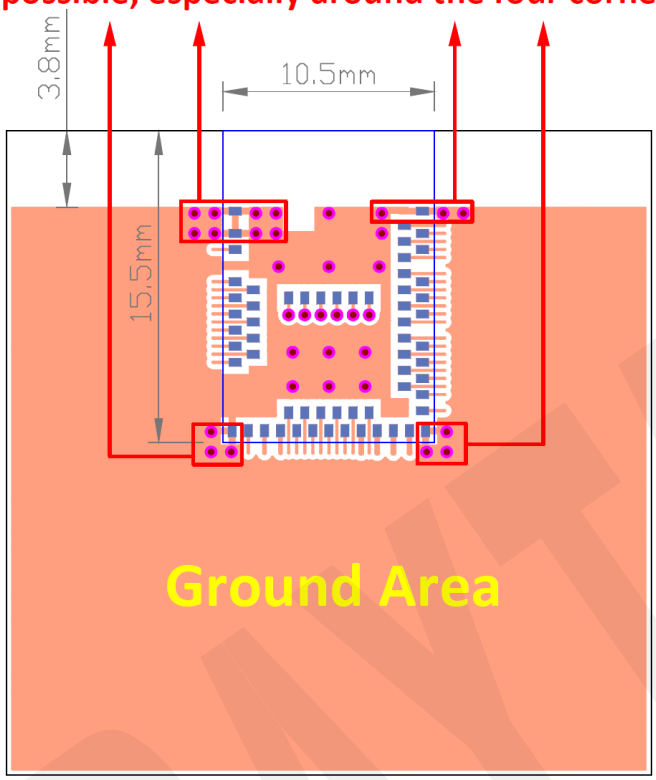

Top View

No Ground-Pad Area

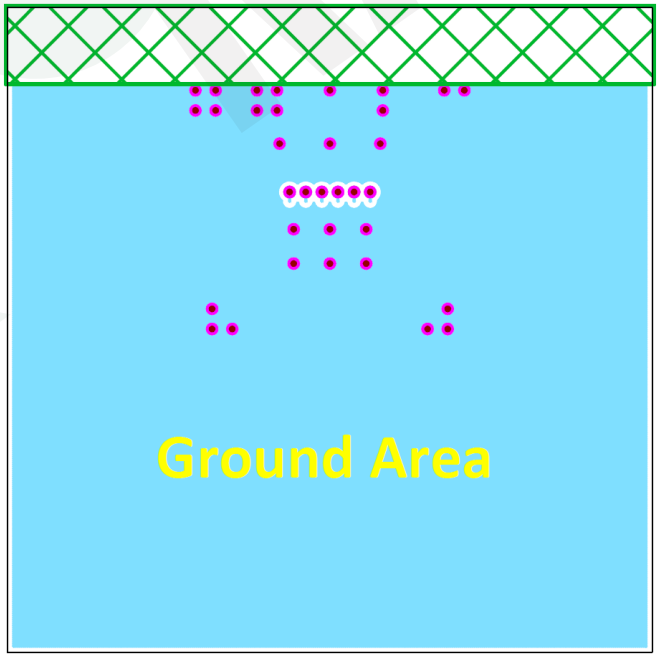

Perpective View

Examples of “**NOT RECOMMENDED**” layout

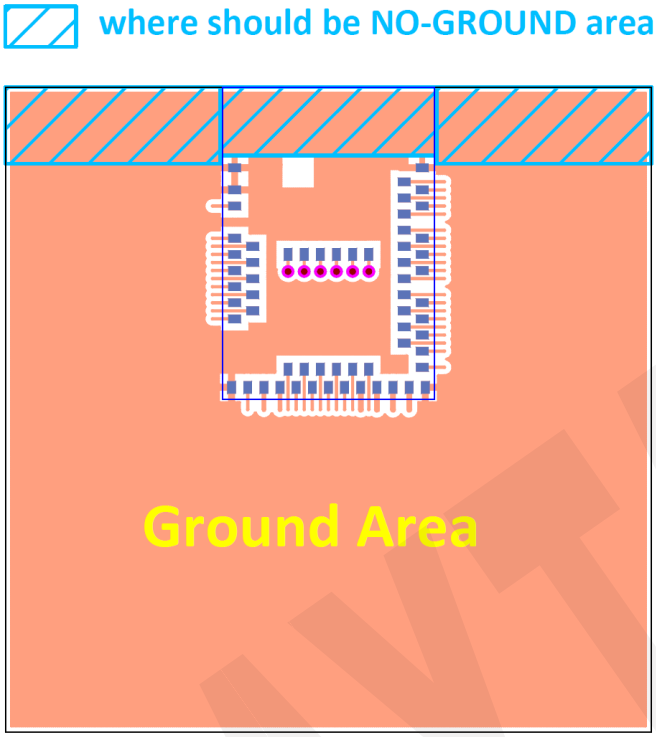

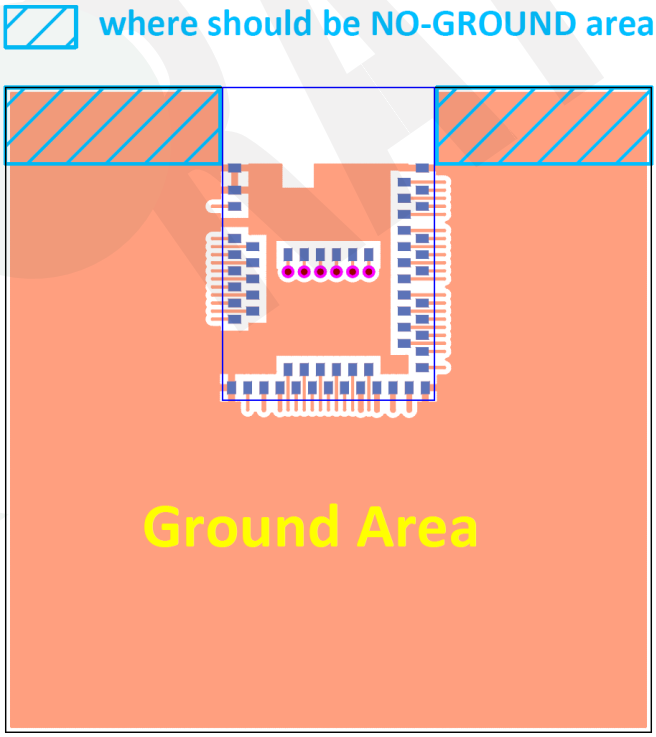

2.4. Footprint & Design Guide

Please visit “Support” page of our website to download. The package includes footprint, 2D/3D drawing, reflow graph/solder profile and recommended spec for external 32.768khz.

2.5. Pin Assignment

Pin No.	Name	Pin function	Description
(1)	GND	Power	Ground
(2)	GND	Power	Ground
(3)	P1.10	Digital I/O	General-purpose I/O (standard drive, low frequency I/O only)
(4)	P1.11	Digital I/O	General-purpose I/O (standard drive, low frequency I/O only)
(5)	P1.12	Digital I/O	General-purpose I/O (standard drive, low frequency I/O only)
(6)	P1.13	Digital I/O	General-purpose I/O (standard drive, low frequency I/O only)
(7)	P1.14	Digital I/O	General-purpose I/O (standard drive, low frequency I/O only)
(8)	P1.15	Digital I/O	General-purpose I/O (standard drive, low frequency I/O only)
(9)	P0.03	Digital I/O	General-purpose I/O (standard drive, low frequency I/O only)
	AIN1	Analog input	Analog input
(10)	P0.29	Digital I/O	General-purpose I/O (standard drive, low frequency I/O only)
	AIN5	Analog input	Analog input
(11)	P0.02	Digital I/O	General-purpose I/O (standard drive, low frequency I/O only)
	AIN0	Analog input	Analog input
(12)	P0.31	Digital I/O	General-purpose I/O (standard drive, low frequency I/O only)
	AIN7	Analog input	Analog input
(13)	P0.28	Digital I/O	General-purpose I/O (standard drive, low frequency I/O only)
	AIN4	Analog input	Analog input
(14)	P0.30	Digital I/O	General-purpose I/O (standard drive, low frequency I/O only)
	AIN6	Analog input	Analog input

Pin No.	Name	Pin function	Description
(15)	**GND**	Power	Ground
(16)	**P0.27**	Digital I/O	General-purpose I/O
(17)	**P0.00**	Digital I/O	General-purpose I/O
	XL1	Analog input	Connection for 32.768 kHz crystal
(18)	**P0.01**	Digital I/O	General-purpose I/O
	XL2	Analog input	Connection for 32.768 kHz crystal
(19)	**P0.26**	Digital I/O	General-purpose I/O
(20)	**P0.04**	Digital I/O	General-purpose I/O
	AIN2	Analog input	Analog input
(21)	**P0.05**	Digital I/O	General-purpose I/O
	AIN3	Analog input	Analog input
(22)	**P0.06**	Digital I/O	General-purpose I/O
(23)	**P0.07**	Digital I/O	General-purpose I/O
	TRACECLK	Trace clock	Trace buffer clock
(24)	**P0.08**	Digital I/O	General-purpose I/O
(25)	**P1.08**	Digital I/O	General-purpose I/O
(26)	**P1.09**	Digital I/O	General-purpose I/O
	TRACEDATA3	Trace data	Trace buffer TRACEDATA [3].
(27)	**P0.11**	Digital I/O	General-purpose I/O
	TRACEDATA2	Trace data	Trace buffer TRACEDATA[2].
(28)	**VDD**	Power	Power supply
(29)	**P0.12**	Digital I/O	General-purpose I/O
	TRACEDATA1	Trace data	Trace buffer TRACEDATA [1].
(30)	**VDDH**	Power	High voltage power supply
(31)	**DCCH**	Power	DC/DC converter output
(32)	**VBUS**	Power	5V input for USB 3.3V regulator
(33)	**GND**	Power	Ground
(34)	**D–**	Digital I/O	USB D-
(35)	**D+**	Digital I/O	USB D+

Pin No.	Name	Pin function	Description
(36)	**P0.14**	Digital I/O	General-purpose digital I/O
(37)	**P0.13**	Digital I/O	General-purpose digital I/O
(38)	**P0.16**	Digital I/O	General-purpose digital I/O
(39)	**P0.15**	Digital I/O	General-purpose digital I/O
(40)	**P0.18**	Digital I/O	General-purpose digital I/O (recommended usage: QSPI / CSN)
	nRESET		Configurable as system RESET
(41)	**P0.17**	Digital I/O	General-purpose digital I/O
(42)	**P0.19**	Digital I/O	General-purpose digital I/O (recommended usage: (QSPI / SCK)
(43)	**P0.21**	Digital I/O	General-purpose digital I/O (recommended usage: QSPI)
(44)	**P0.20**	Digital I/O	General-purpose digital I/O
(45)	**P0.23**	Digital I/O	General-purpose digital I/O (recommended usage: QSPI)
(46)	**P0.22**	Digital I/O	General-purpose digital I/O (recommended usage: QSPI)
(47)	**P1.00**	Digital I/O	General-purpose digital I/O (recommended usage: QSPI)
	TRACEDATA0	Trace data	Trace buffer TRACEDATA [0].
(48)	**P0.24**	Digital I/O	General-purpose digital I/O
(49)	**P0.25**	Digital I/O	General-purpose digital I/O
(50)	**P1.02**	Digital I/O	General-purpose I/O (standard drive, low frequency I/O only)
(51)	**SWDIO**	Debug	Serial wire debug I/O for debug and programming
(52)	**P0.09**	Digital I/O	General-purpose I/O (standard drive, low frequency I/O only)
	NFC1	NFC input	NFC antenna connection
(53)	**SWDCLK**	Debug	Serial wire debug clock input for debug and programming
(54)	**P0.10**	Digital I/O	General-purpose I/O (standard drive, low frequency I/O only)
	NFC2	NFC input	NFC antenna connection

Pin No.	Name	Pin function	Description
(55)	**GND**	Power	Ground
(56)	**P1.04**	Digital I/O	General-purpose I/O (standard drive, low frequency I/O only)
(57)	**P1.06**	Digital I/O	General-purpose I/O (standard drive, low frequency I/O only)
(58)	**P1.07**	Digital I/O	General-purpose I/O (standard drive, low frequency I/O only)
(59)	**P1.05**	Digital I/O	General-purpose I/O (standard drive, low frequency I/O only)
(60)	**P1.03**	Digital I/O	General-purpose I/O (standard drive, low frequency I/O only)
(61)	**P1.01**	Digital I/O	General-purpose I/O (standard drive, low frequency I/O only)

2.6. GPIO Located Near the Radio

Please refer to *2.5 Pin Assignment* on page 16 to 18 where identifies some GPIO that have recommended usage. To maximize RF performance, these GPIO are only available to use under standard drive, low frequency I/O only, wrong usage may lead to undesirable performance.

Low frequency I/O is a signal with a frequency up to 10 kHz. SPI, I2C, UART, PWM are NOT low frequency I/O.

3. Main Chip Solution

RF IC	Crystal Frequency
Nordic NRF52840	**32MHZ**

32MHz crystal and RF (VDD) DC/DC inductor (Reg1) are already inside the module.

4. Shipment Packaging Information

Model	Antenna	Photo
MDBT50Q-1MV2	Chip/Ceramic	
MDBT50Q-P1MV2	PCB/Printed	

Module with one black dot is using revision 1 IC. The one <u>without</u> black dot is using revision 2 IC and date code starts from 914 and after.

- Unit Weight of Module:

MDBT50Q-1MV2: 0.68 g (±0.02 g) ; MDBT50Q-P1MV2: 0.64 g (±0.02 g)

- Packaging Type: Anti-static tray or Tape & Reel

	Tray	Tape & Reel
MPQ (Min. Package Q'ty)	88 pcs per tray	1,500 pcs per reel
Carton Contents (per carton)	1,760 pcs	1,500 pcs
Carton Dimension (L) x (W) x (H) cm	37 x 21 x 13	37 x 36 x 6
Gross Weight	about 2.8 kgs	about 1.9 kgs

4.1. Marking on Metal Shield

Label contexts for date code 839 and after,

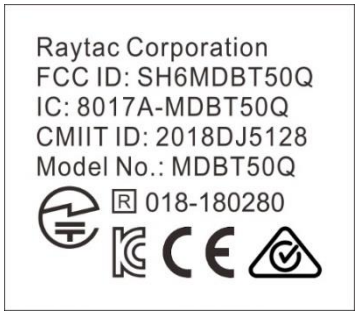

For date code 833 to 838,

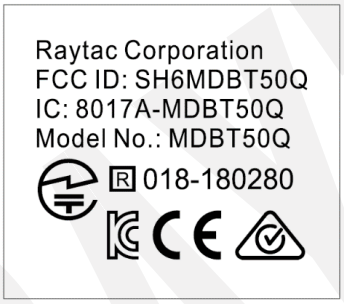

There is no marking on metal shield for module(s) with date code before 833.

4.2. Packaging Info

4.2.1. Tray Packaging

Anti-static tray is specifically designed for mass production. It can be used directly on SMT automatic machine

Before July 1st, 2022

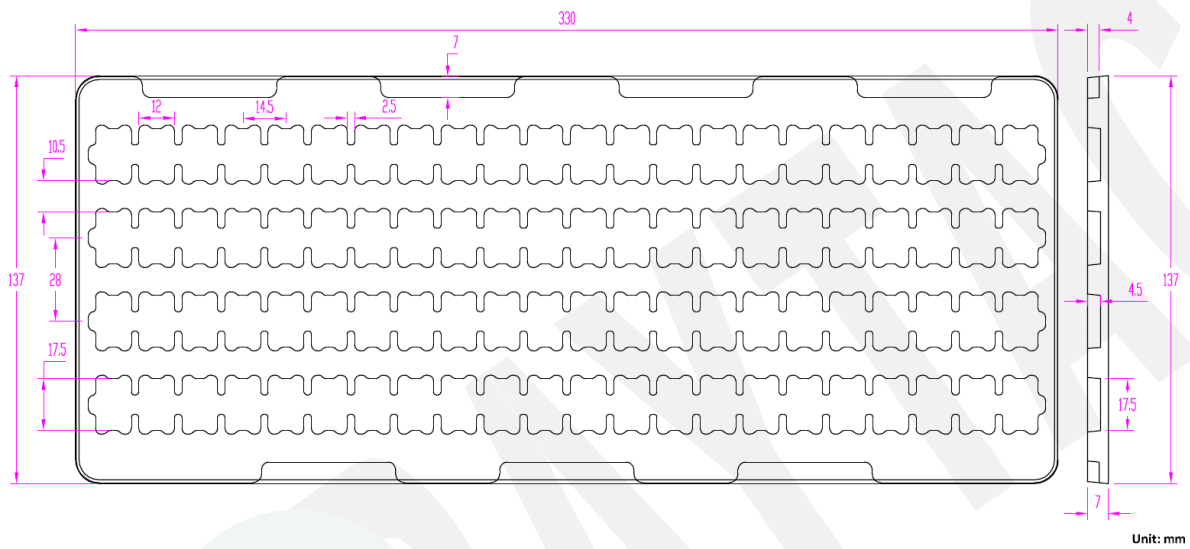

After July 1st, 2022

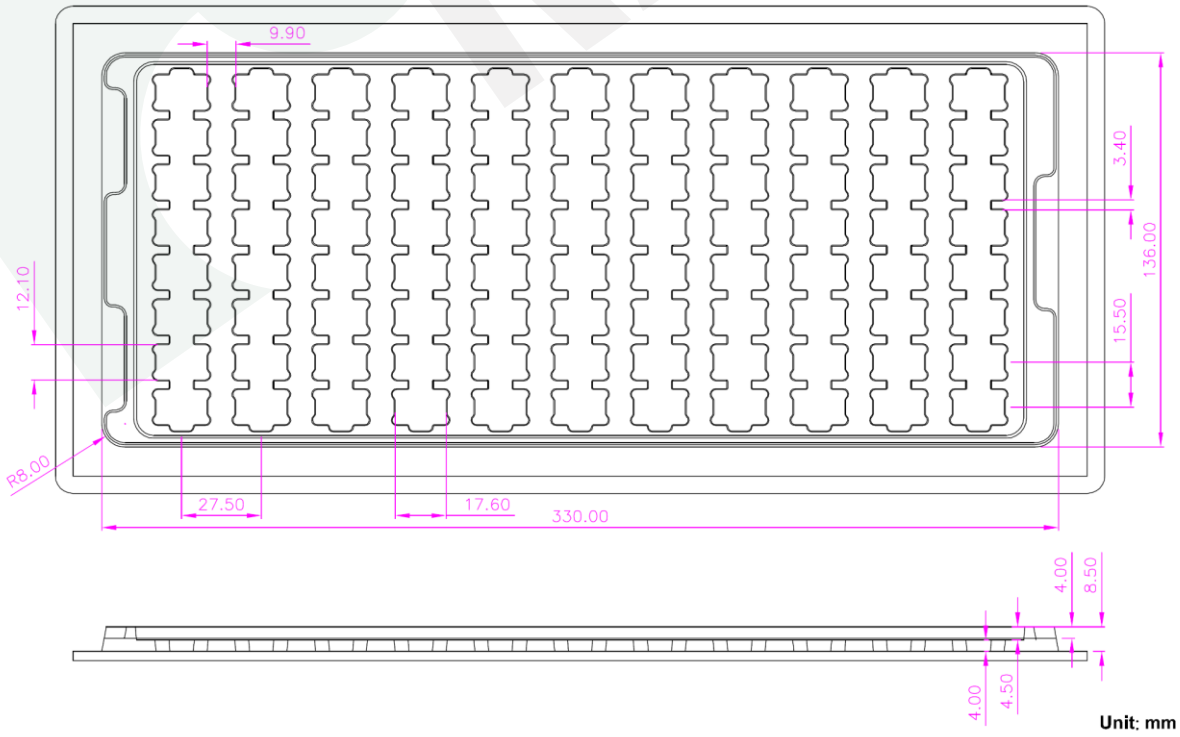

4.2.2. Tape & Reel Packaging

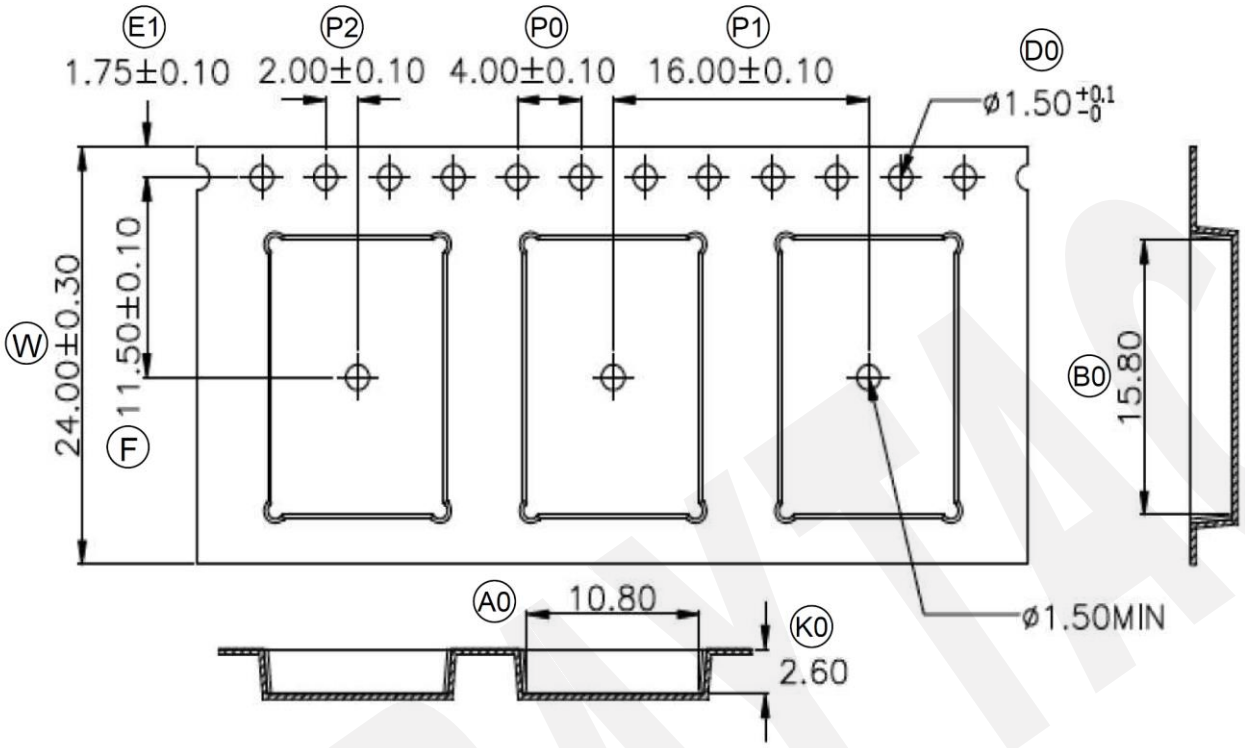

W	24.00	±0.30
P1	16.00	±0.10
E1	1.75	±0.10
F	11.50	±0.10
D0	1.50	+0.1/-0
P0	4.00	±0.10
P2	2.00	±0.10
A0	10.80	±0.10
B0	15.80	±0.10
K0	2.60	±0.10
T	0.30	±0.05

4.3. Order Code

Each model has two options of packaging. Please use following part no. when placing order to us.

Model	Tray	Tape & Reel
MDBT50Q-1MV2	MD-240A3-007	MD-240A3-007R
MDBT50Q-P1MV2	MD-240A3-008	MD-240A3-008R

MPQ of Reel packaging is 1,500 pcs and Tray packaging is 88 pcs.

RAYTAC

6. Block Diagram

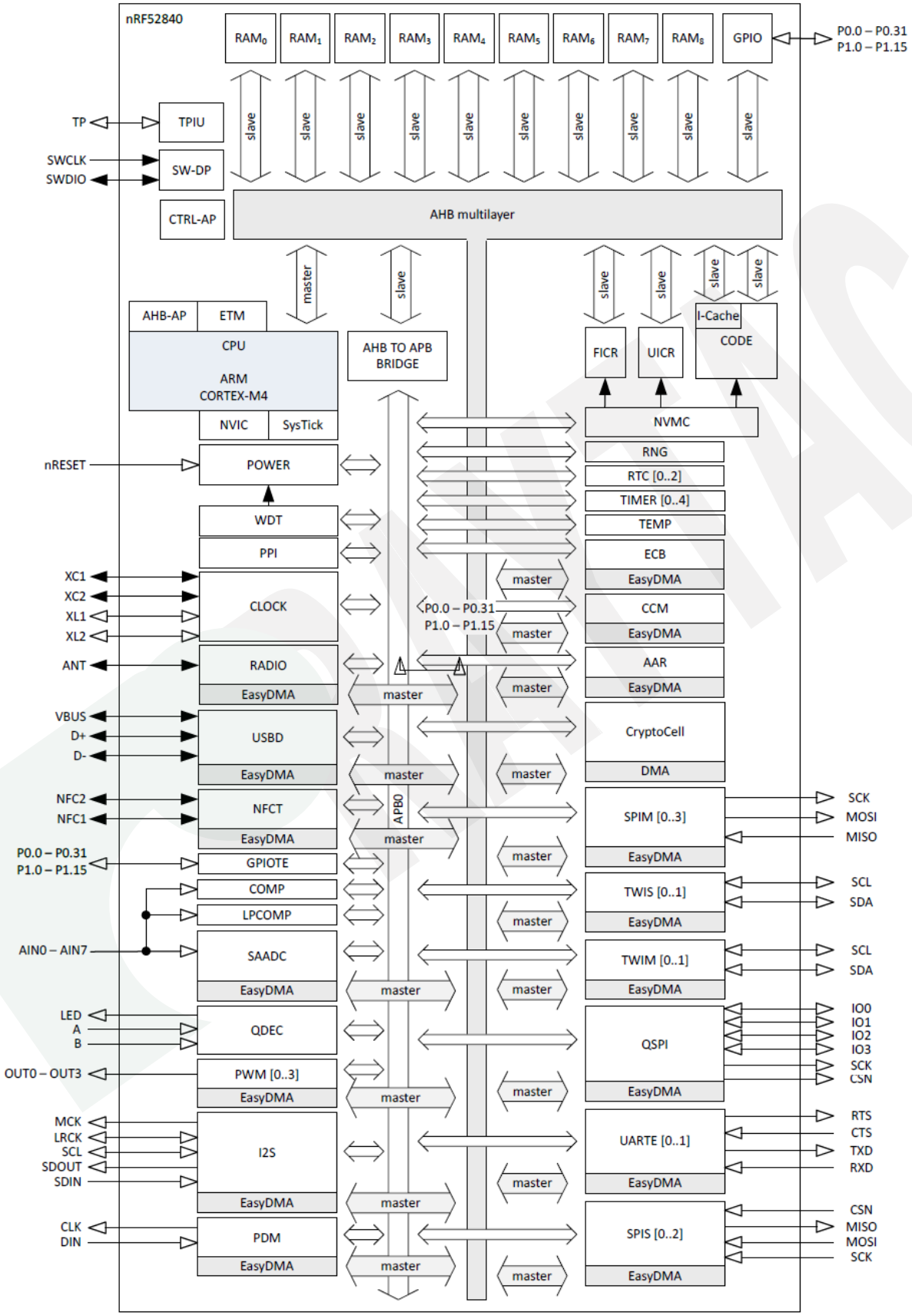

7. Antenna

7.1. MDBT50Q

Antenna Gain and Efficiency

MDBT50Q (CHIP antenna)			
Freq(MHz)	Peak. dBi	Efficiency	Average . dBi
2400.00	-1.47	25.18%	-5.99
2410.00	-1.27	26.07%	-5.84
2420.00	-1.32	27.15%	-5.66
2430.00	-1.12	28.51%	-5.45
2440.00	-0.80	29.41%	-5.32
2450.00	-0.65	29.59%	-5.29
2460.00	-0.82	28.98%	-5.38
2470.00	-0.94	29.31%	-5.33
2480.00	-0.88	29.12%	-5.36
2490.00	-0.98	27.60%	-5.59
2500.00	-1.49	24.96%	-6.03

Free Space
EIRP (2450 MHz) – XY cut

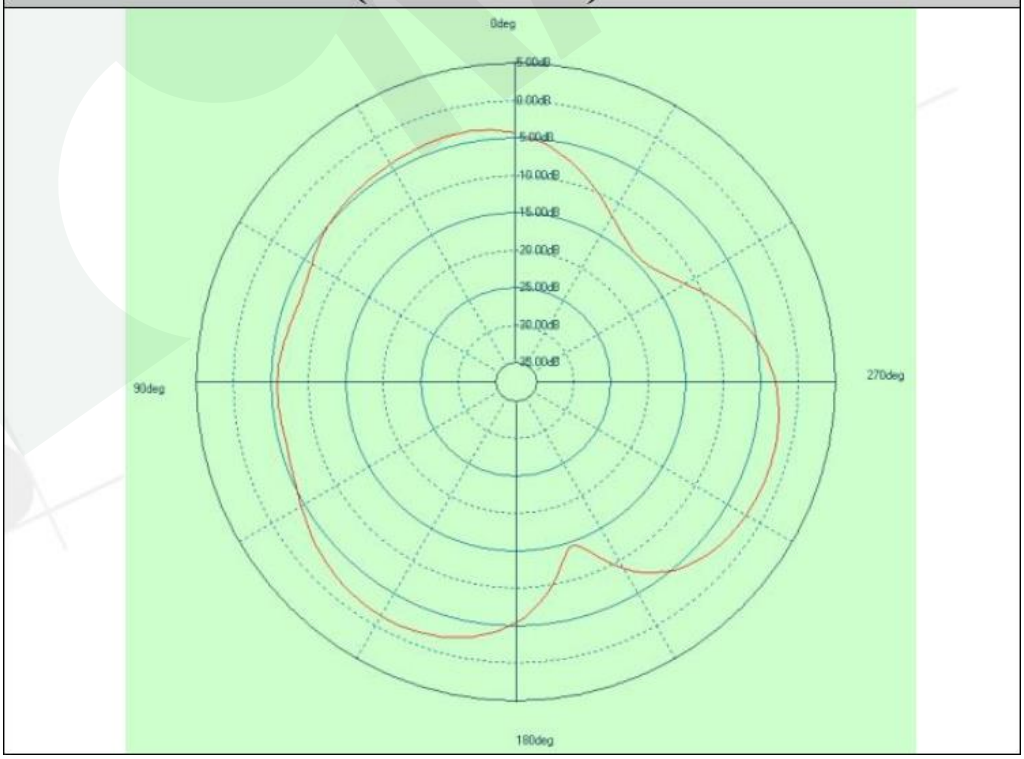

Free Space
EIRP (2450 MHz) – XZ cut

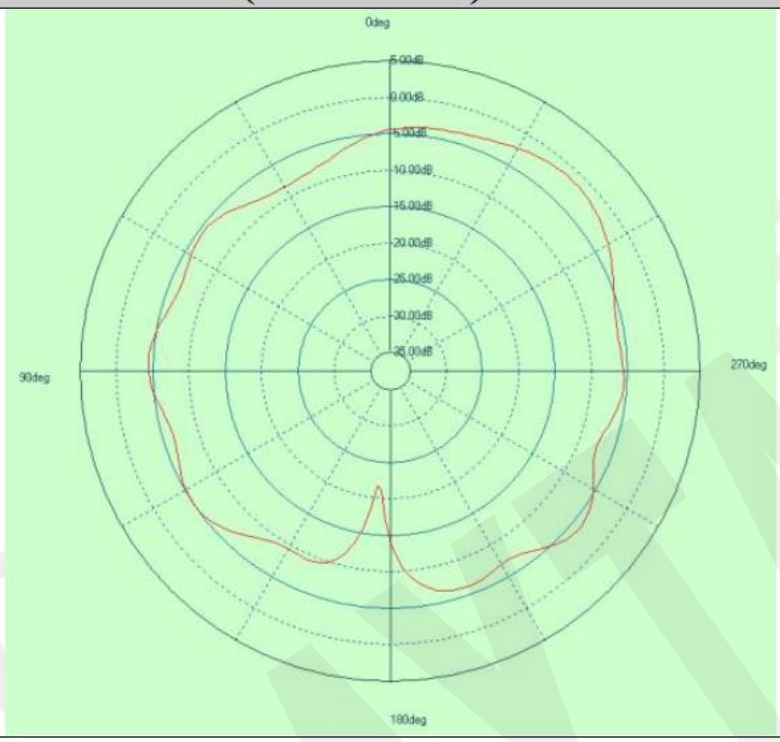

Free Space
EIRP (2450 MHz) – YZ cut

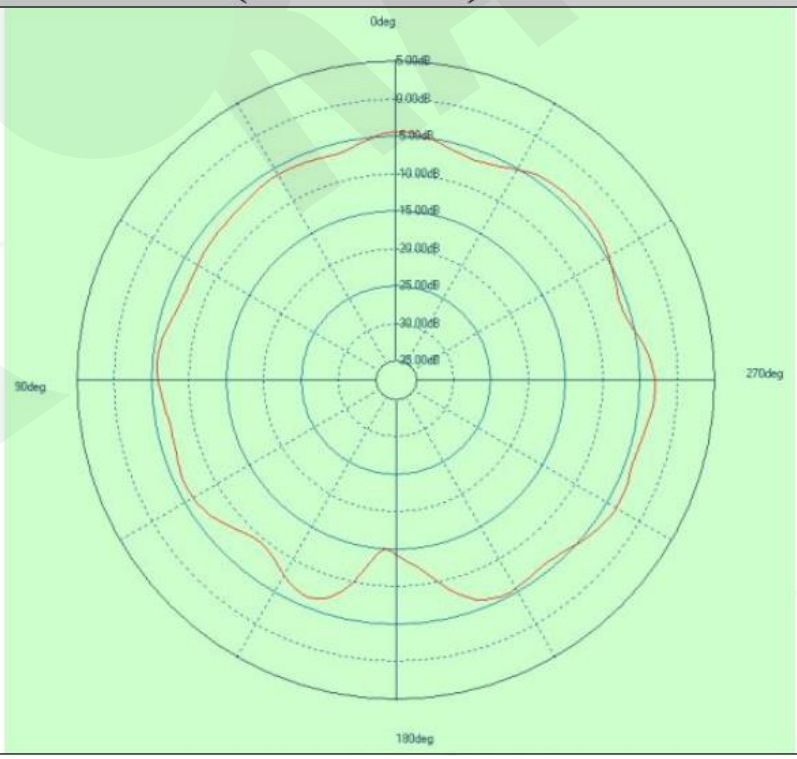

8. Reference Circuit

This chapter shows a different combination of reference circuits. **Before getting started, please read below notes carefully because it is applied to all the reference circuits.**

- **32MHz crystal and RF (VDD) DC/DC inductor (Reg1) are already inside the module.**

- **Module is pre-programmed with Raytac testing code. Default is using LDO mode and need to add external 32.768khz to work.**

  You can use DC-DC mode *without* adding external 32.768khz, they are NOT related events.

- **When using internal 32.768khz RC oscillator, please remove X2 / C12 / C13.**

- **Recommended L4 spec: 10μH, 0603 Chip Inductor, IDC, min = 80mA, ±20%.**

- **When NOT using NFC, please remove NFC1 / C19 / C21.**

8.1. Reg0 DC/DC Enabled

Recommend using when *the highest* input voltage is equal or greater than 3.6V. Supply power from VDDH.

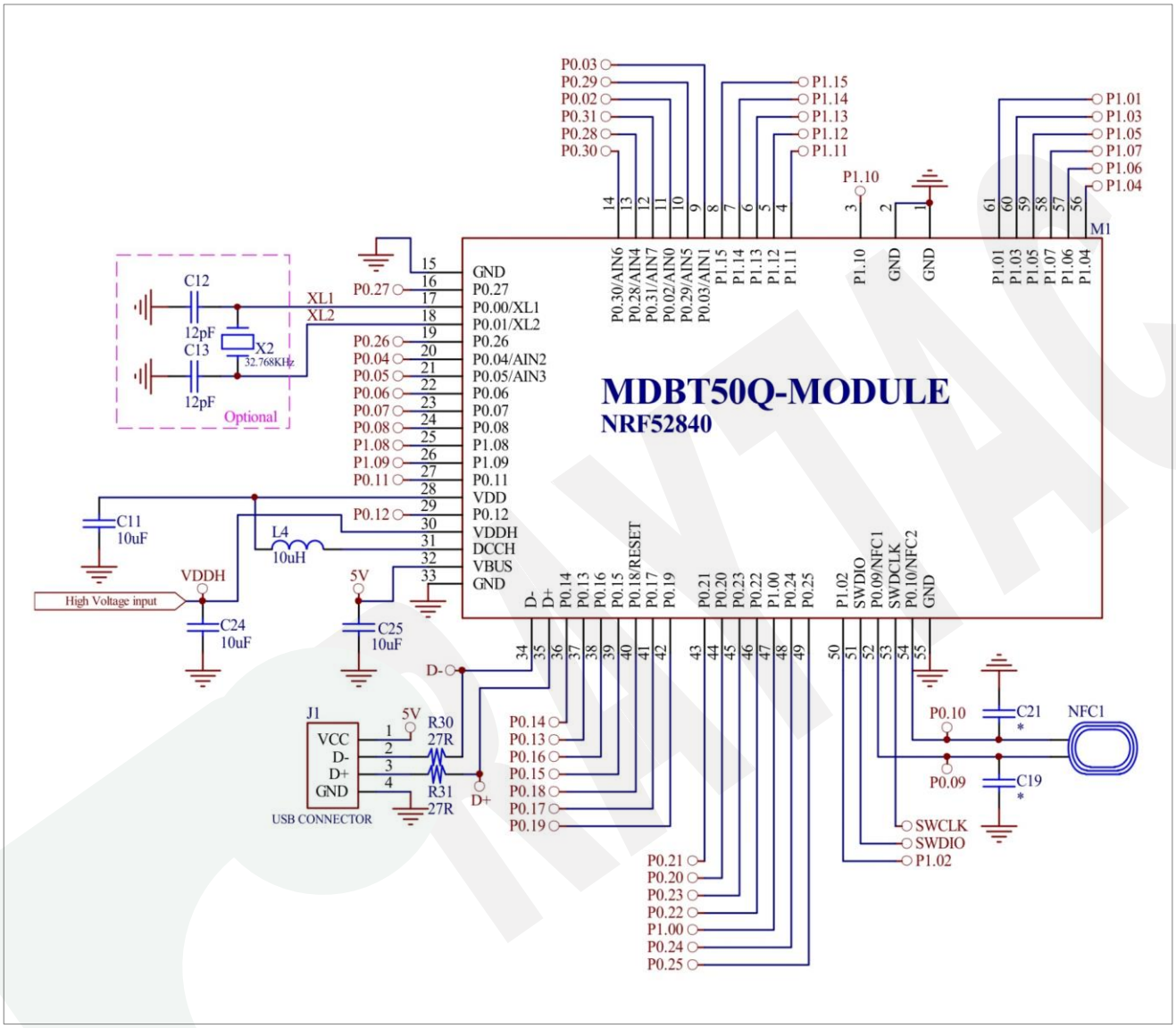

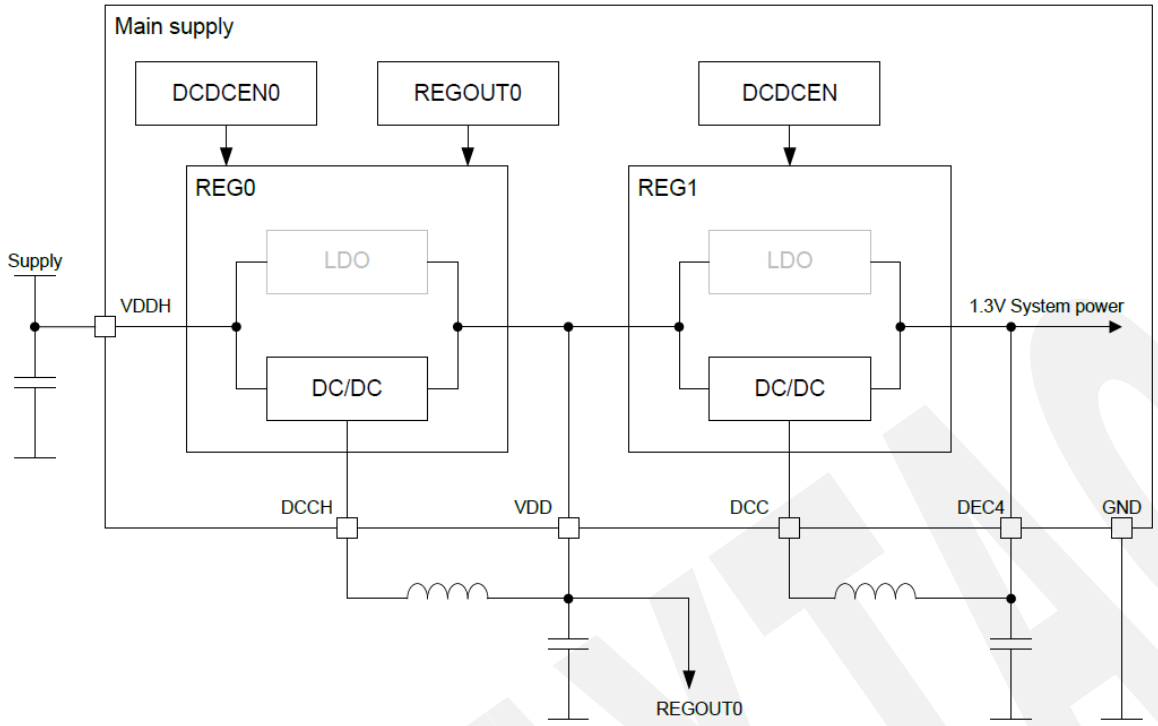
Main supply
DCDCEN0
REGOUT0
DCDCEN
REG0
REG1
LDO
LDO
Supply
VDDH
1.3V System power
DC/DC
DC/DC
DCCH
VDD
DCC
DEC4
GND
REGOUT0

8.2. Reg0 LDO Mode

Recommend using when the highest input voltage is equal or greater than 3.6V. Supply power from VDDH.

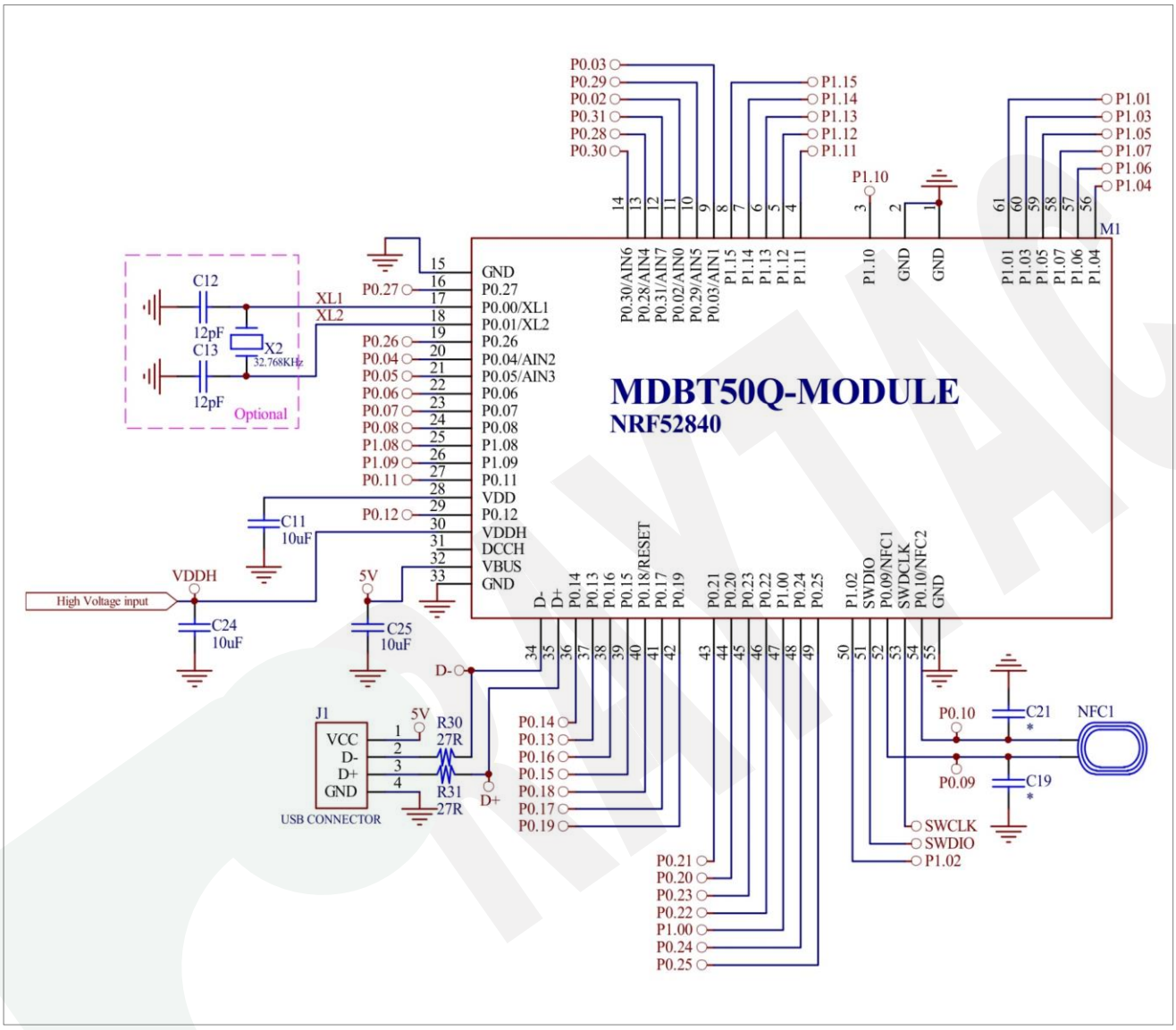

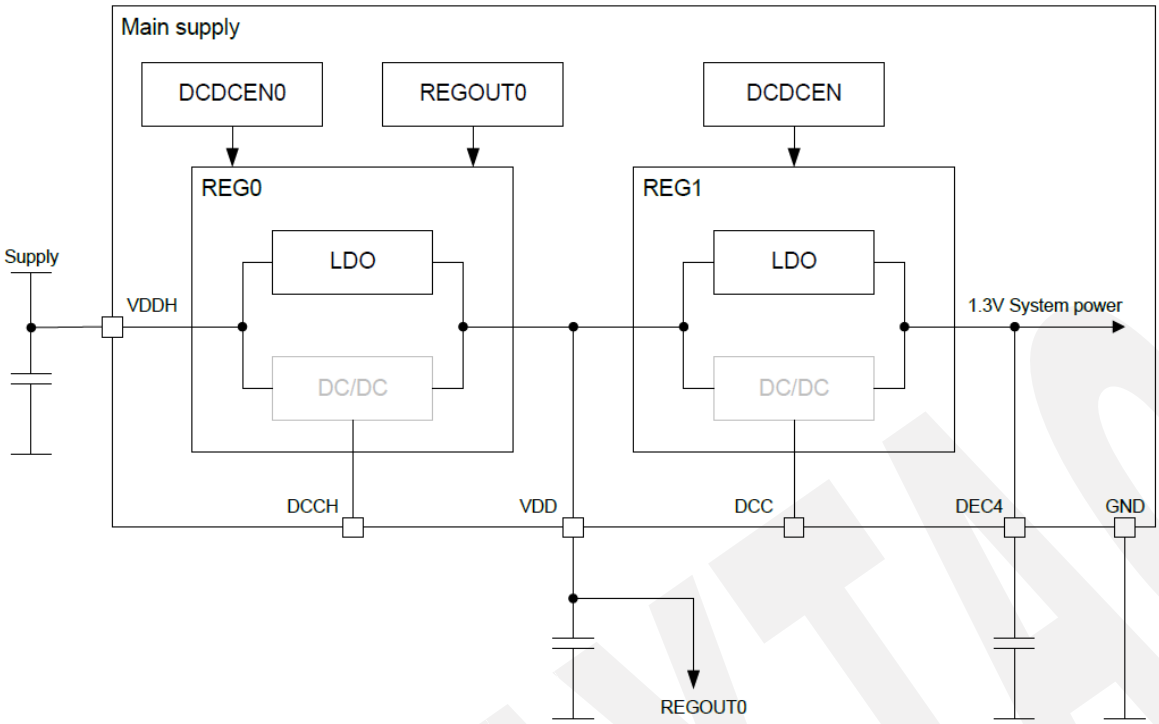
Main supply
DCDCEN0
REGOUT0
DCDCEN
REG0
REG1
LDO
LDO
Supply
VDDH
1.3V System power
DC/DC
DC/DC
DCCH
VDD
DCC
DEC4
GND
REGOUT0

8.3. Reg0 DC/DC and LDO Mode Disabled

Recommend using when the highest input voltage is less than 3.6V.

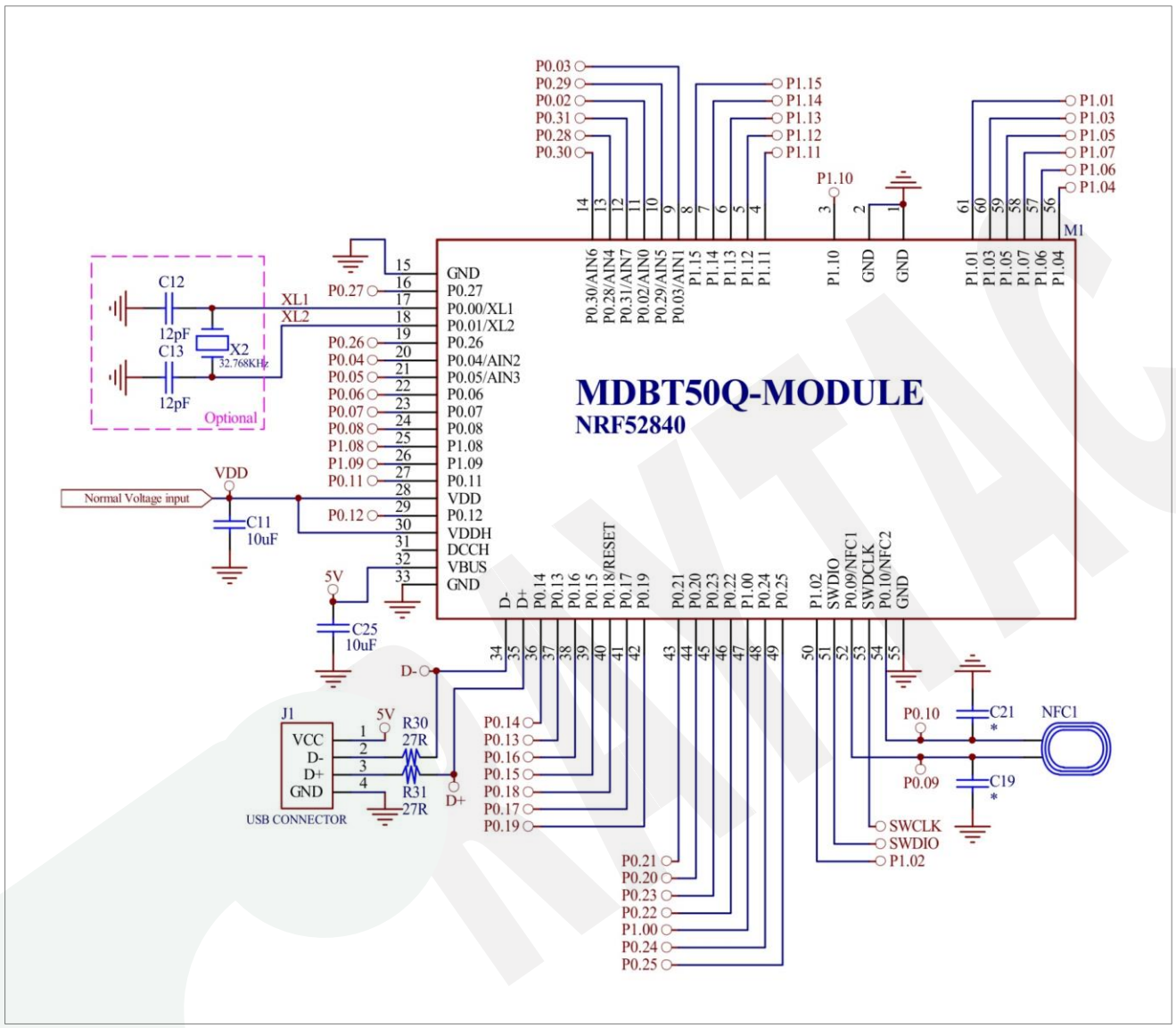

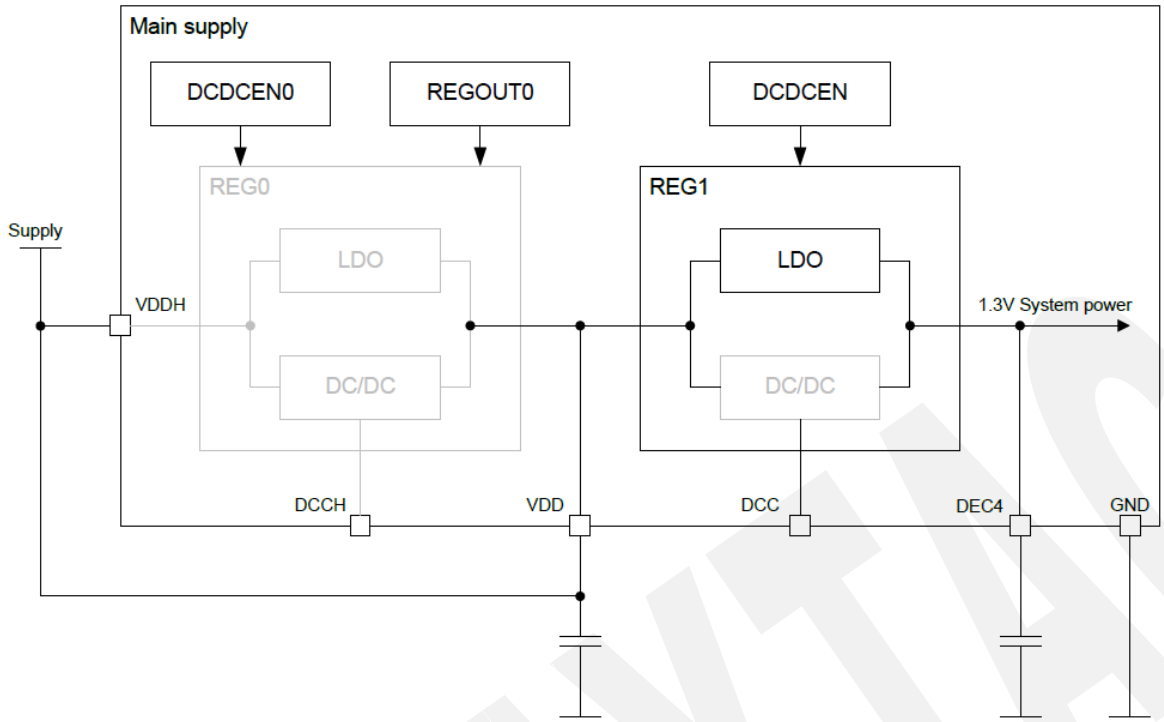
Main supply
DCDCEN0
REGOUT0
DCDCEN
REG0
REG1
Supply
LDO
LDO
VDDH
1.3V System power
DC/DC
DC/DC
DCCH
VDD
DCC
DEC4
GND

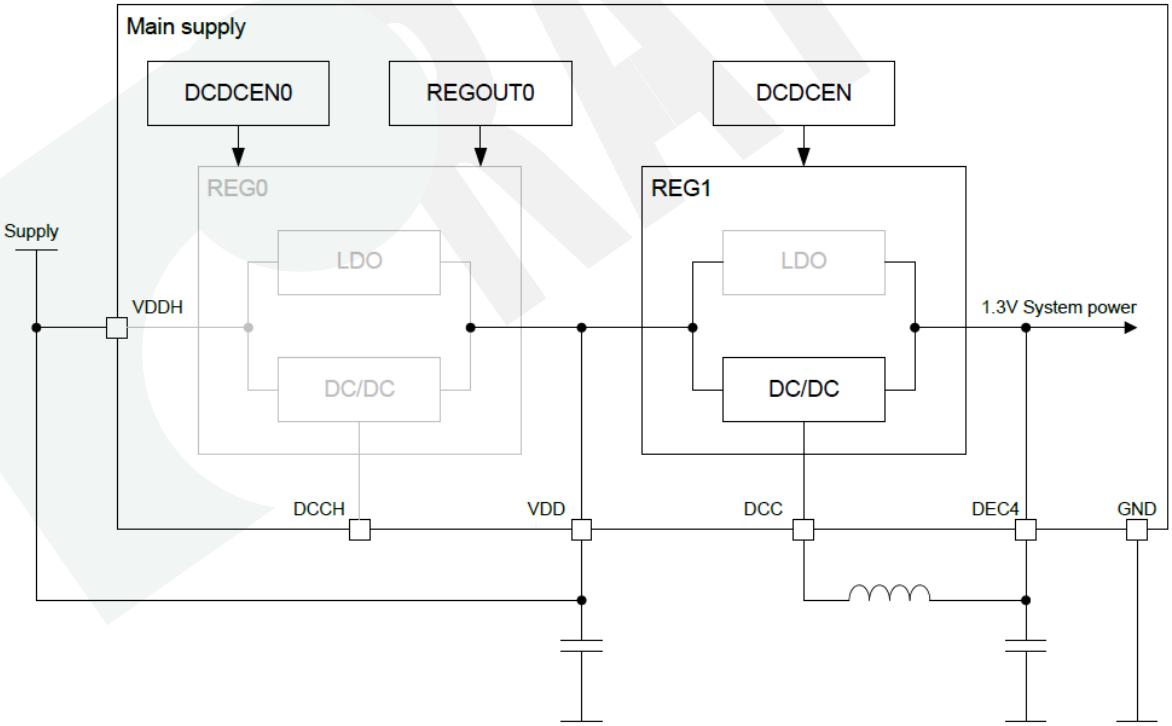
Main supply
DCDCEN0
REGOUT0
DCDCEN
REG0
REG1
Supply
LDO
LDO
VDDH
1.3V System power
DC/DC
DC/DC
DCCH
VDD
DCC
DEC4
GND

8.4. USB Powered

Recommend using when power the device via USB.

8.4.1. Reg0 DC/DC Enabled

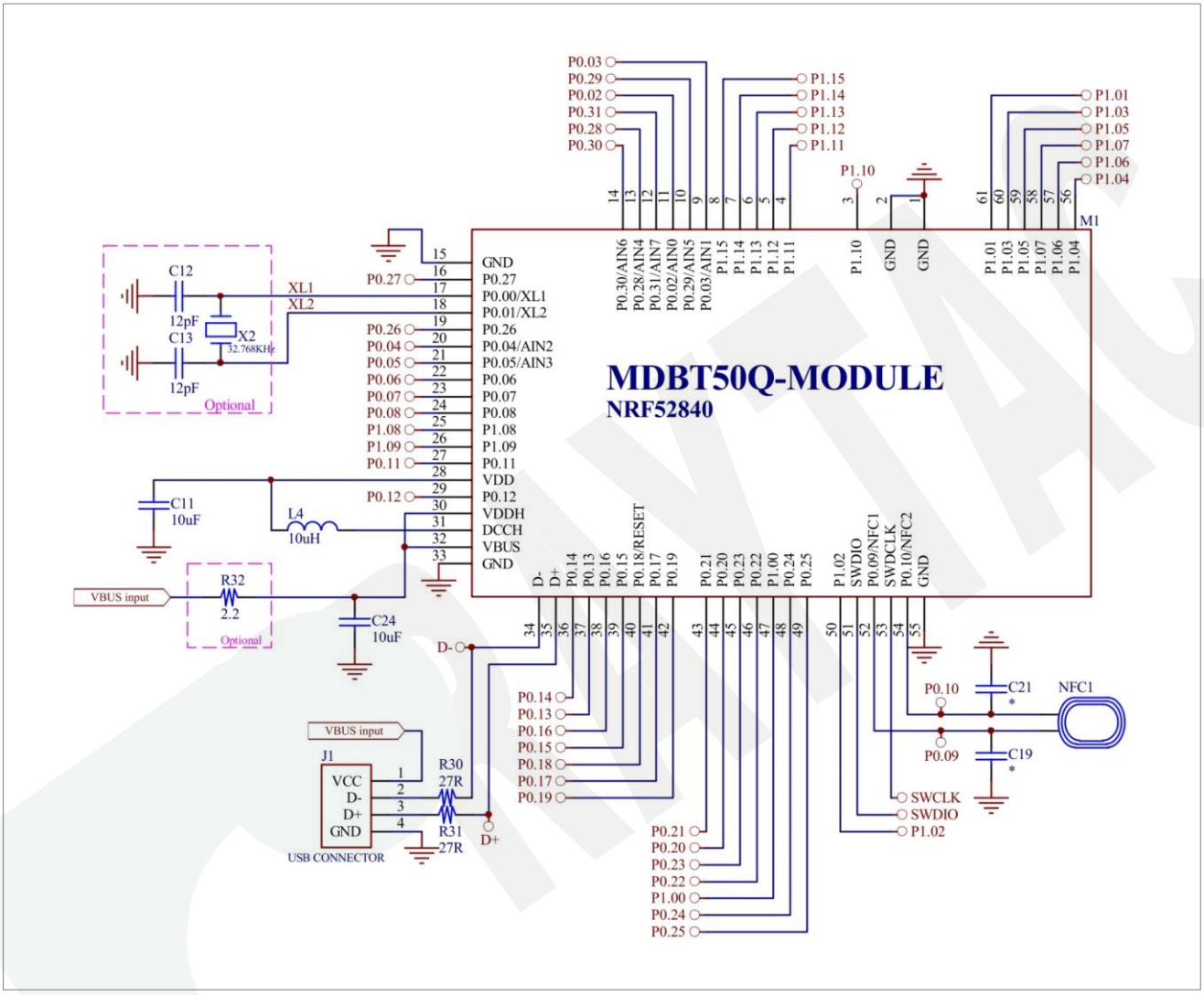

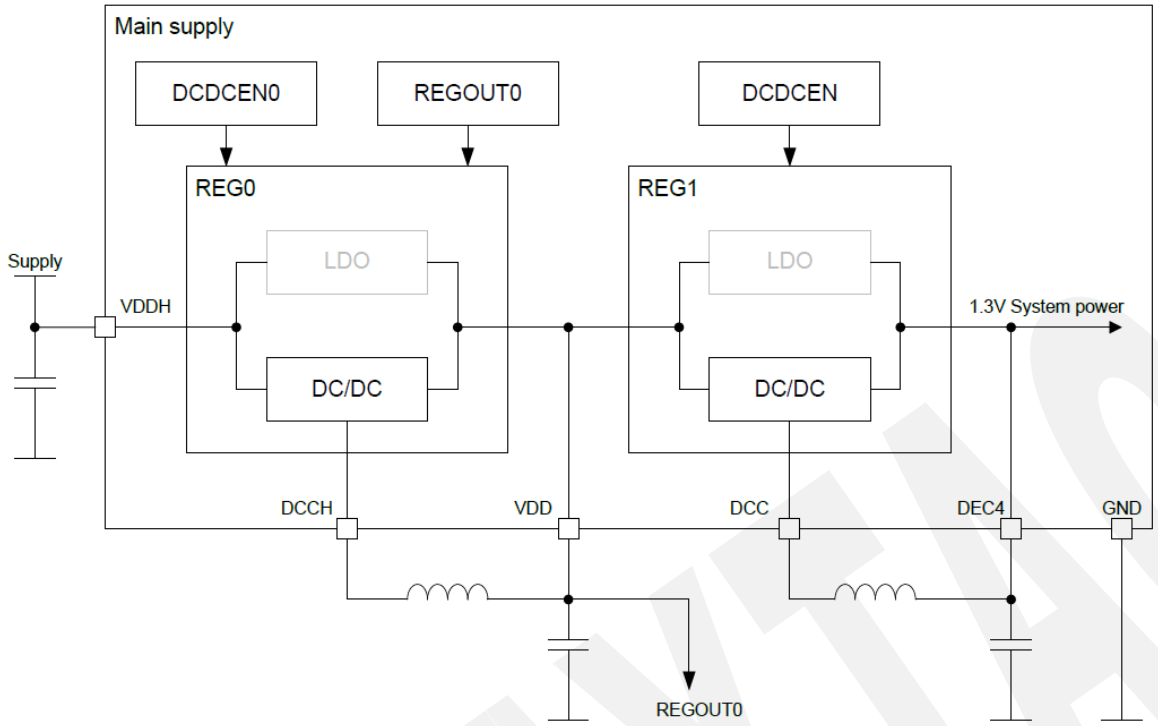
Main supply
DCDCEN0
REGOUT0
DCDCEN
REG0
REG1
LDO
LDO
Supply
VDDH
1.3V System power
DC/DC
DC/DC
DCCH
VDD
DCC
DEC4
GND
REGOUT0

8.4.2. Reg0 LDO Mode

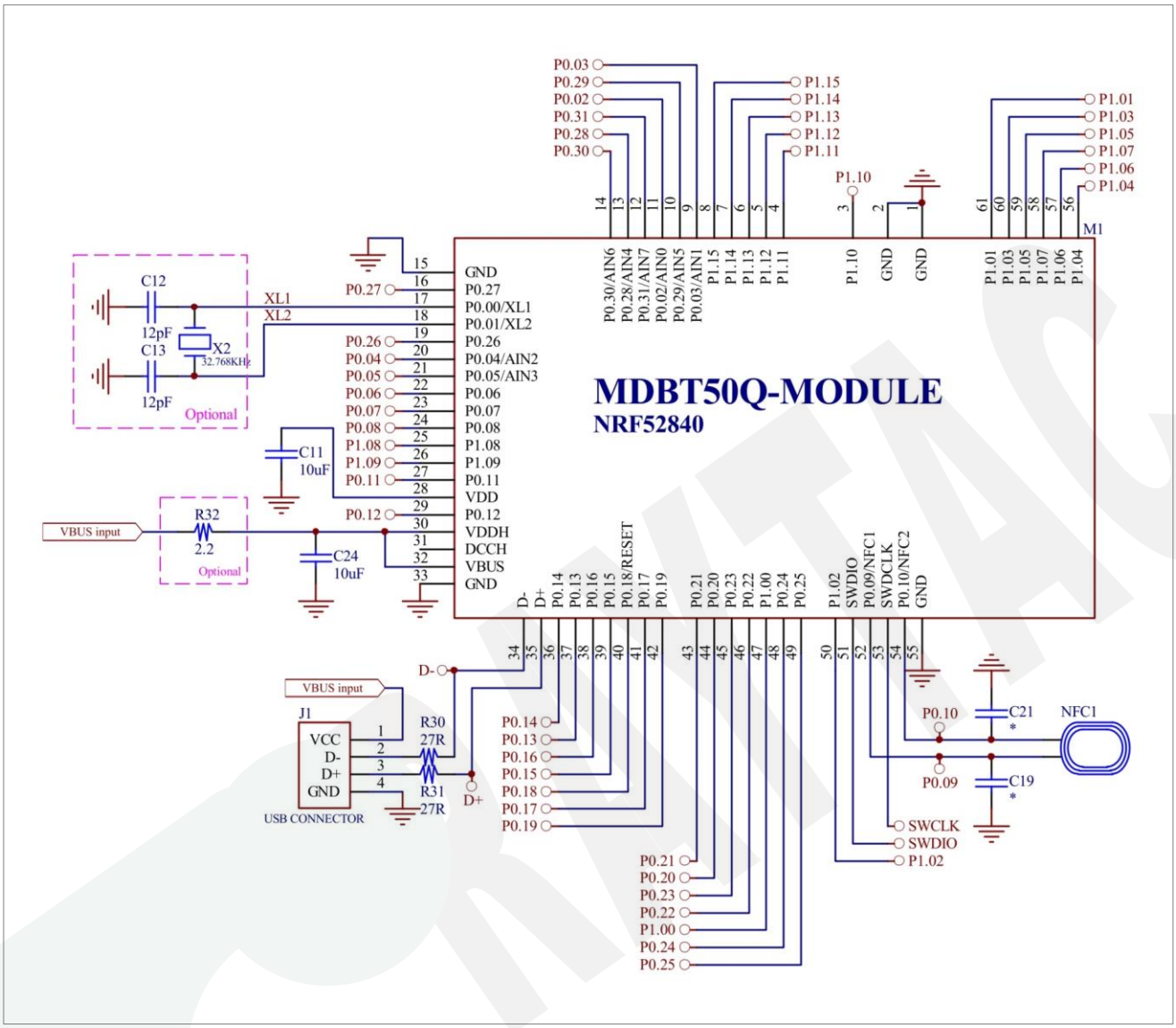

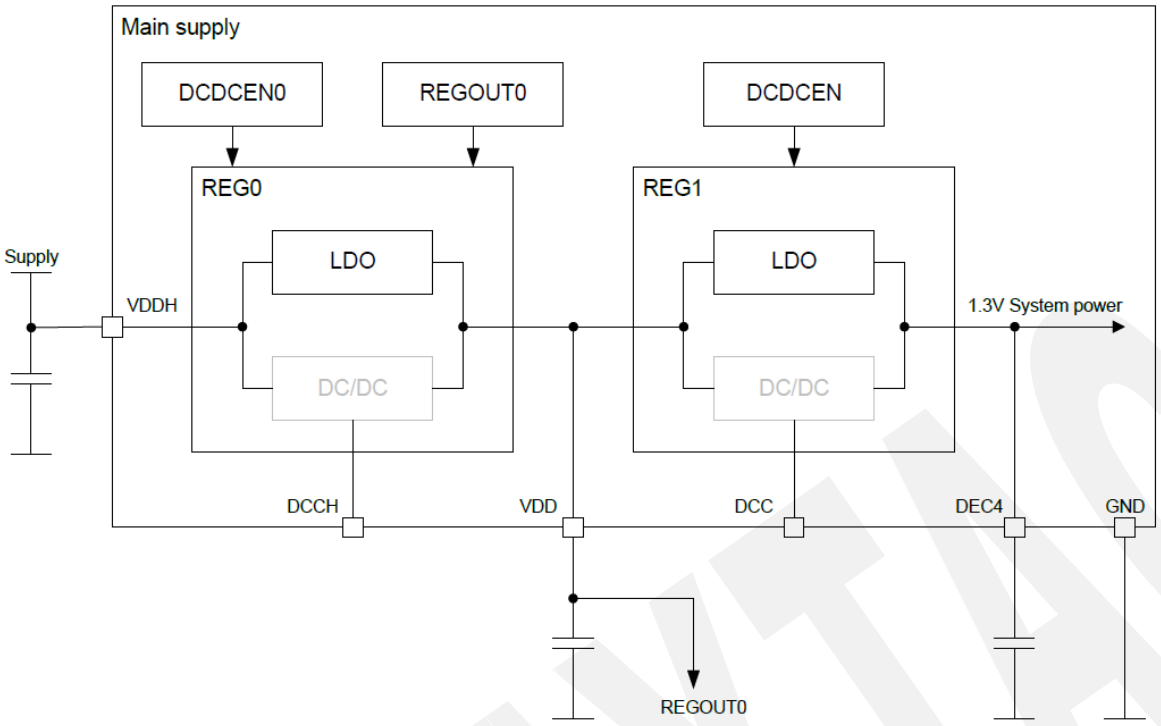
Main supply
DCDCEN0
REGOUT0
DCDCEN
REG0
REG1
LDO
LDO
Supply
VDDH
1.3V System power
DC/DC
DC/DC
DCCH
VDD
DCC
DEC4
GND
REGOUT0

8.5. USB Disabled

This circuit only focuses on USB disabled. You can use it to go with other 3 reference circuits.
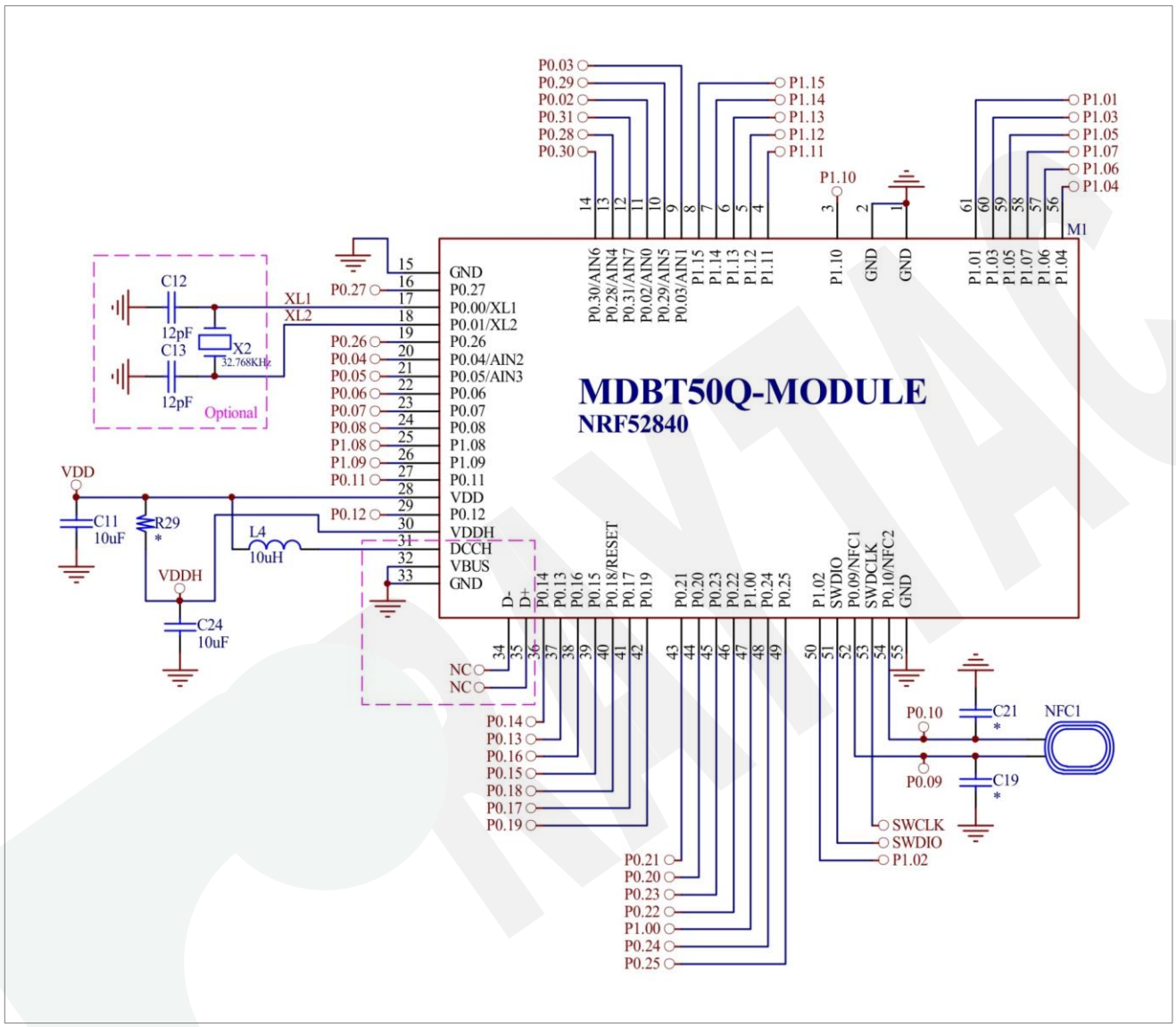
Please leave D^+ & D^- as NC when USB is disabled.