TAOGLAS

Datasheet

868/915MHz ISM/LoRA Flexible PCB Antenna

Part No:
FXP895.07.0200C

Description

860-928MHz ISM/LoRA Compact Flexible PCB Antenna

Features:

Compact ISM/LoRA antenna
Embedded FPC Antenna Supporting 860 to 928MHz
Dimensions: 69mm * 20mm * 0.2mm
Mini coaxial cable -mm 1.13 IPEX MHFI U.FL Compatible connector
Custom Cables and Connectors Available
RoHS & Reach Compliant

1.	Introduction	3
2.	Specification	4
3.	Antenna Characteristics	5
4.	Radiation Patterns	9
5.	Mechanical Drawing	12
6.	Packaging	13
	Changelog	16

Taoglas makes no warranties based on the accuracy or completeness of the contents of this document and reserves the right to make changes to specifications and product descriptions at any time without notice. Taoglas reserves all rights to this document and the information contained herein. Reproduction, use or disclosure to third parties without express permission is strictly prohibited.

1. Introduction

The Taoglas FXP895 is an ISM/LoRA compact flexible PCB antenna designed to fit into small devices. This antenna has been expertly designed to cover frequencies used in different regions for ISM/LoRA applications, incorporating a wideband design is rare for ISM/LoRA products and with the FXP895 frequencies from 860-928MHz can be covered so one SKU can be used for global ISM/LoRA applications.

The FXP895 has been designed to be extremely compact compared to other ISM/LoRA Flexible PCB antennas meaning it can be placed in areas where other products cannot. It can be adhered via 3M tape on to a customer's device with care taken to ensure the antenna is placed as far away from metal components as possible.

Typical Applications Include:
- Remote Monitoring
- Mesh Networks
- Security

The FXP895's cables and connectors are fully customizable, please contact your regional Taoglas customer support team for further information.

2. Specification

LTE Electrical								
Band	Frequency (MHz)	Efficiency (%)	Average Gain (dB)	Peak Gain (dBi)	Impedance	Polarization	Radiation Pattern	Max. input power
868MHz	863-870	51.6	-2.87	1.92	50 Ω	Linear	Omni	2W
915MHz	902-928	58.3	-2.34	2.83				

Mechanical	
Dimensions	69.3 x 20 x 1.6mm
Weight	2g
Material	Polymer
Connector	IPEX MHFI U.FL compatible
Cable	1.13mm Coaxial

Environmental	
Operation Temperature	-40°C to 85°C
Storage Temperature	-40°C to 85°C
Relative Humidity	40% to 95%
RoHs & REACH Compliant	Yes

3. Antenna Characteristics

3.1 Test Setup

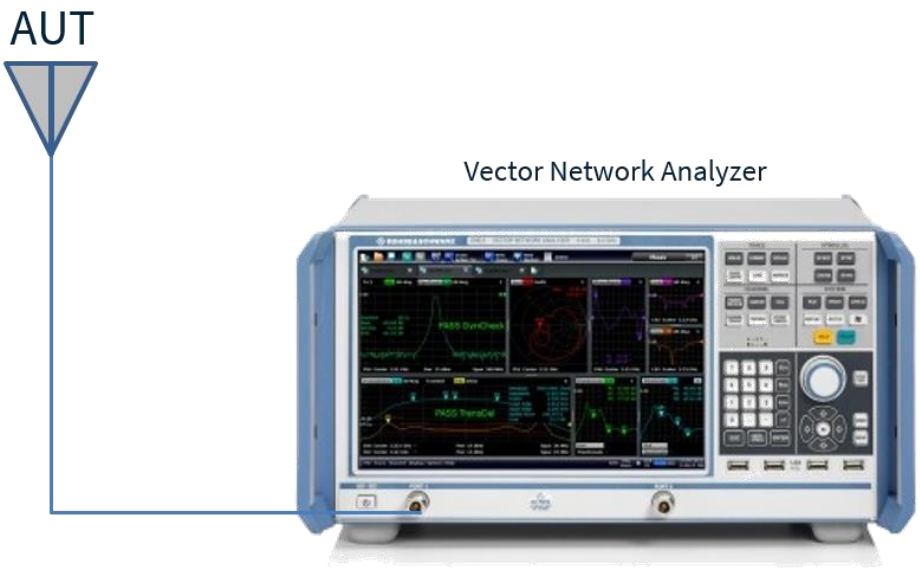

3.2 Return Loss

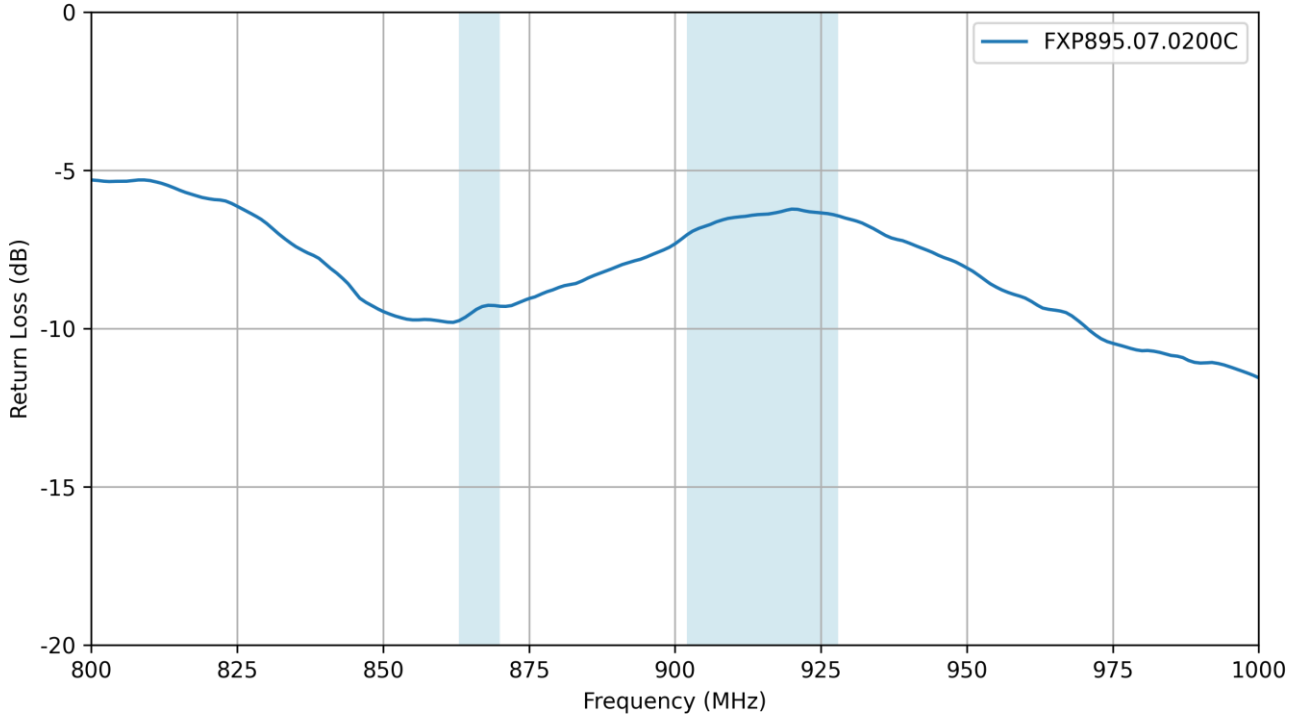

3.3 VSWR

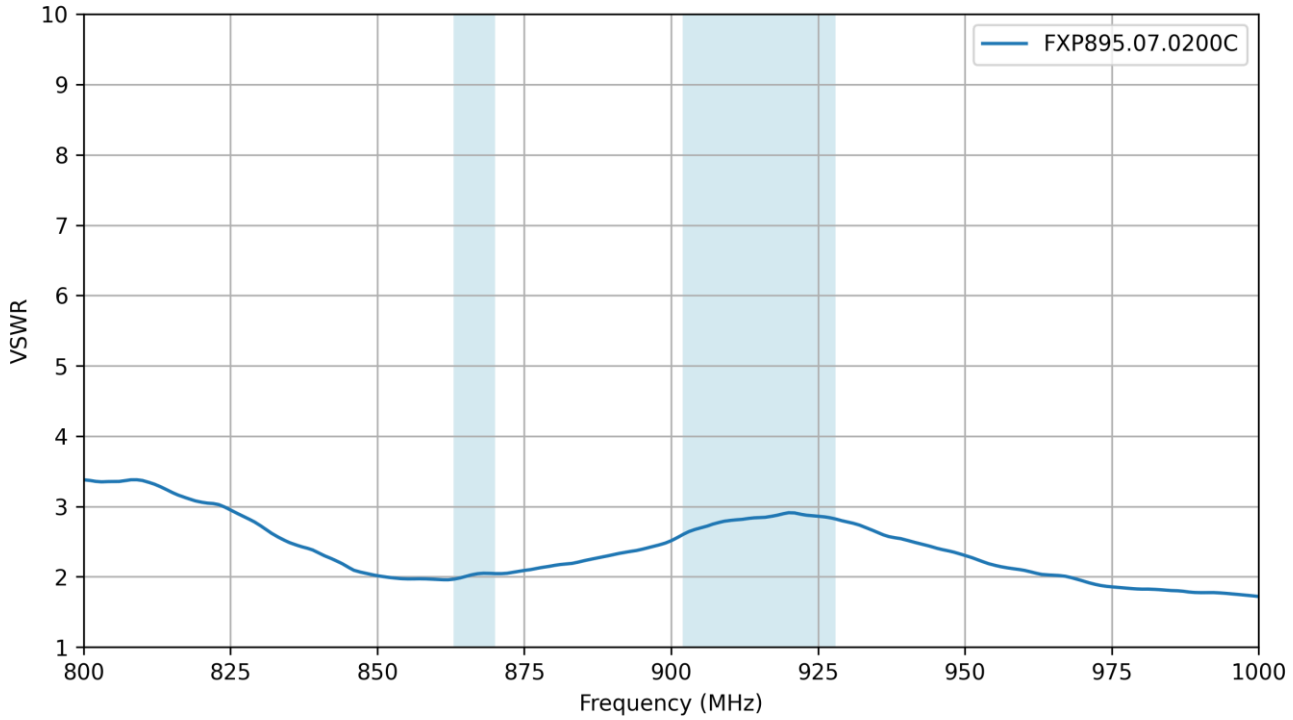

3.4 Efficiency

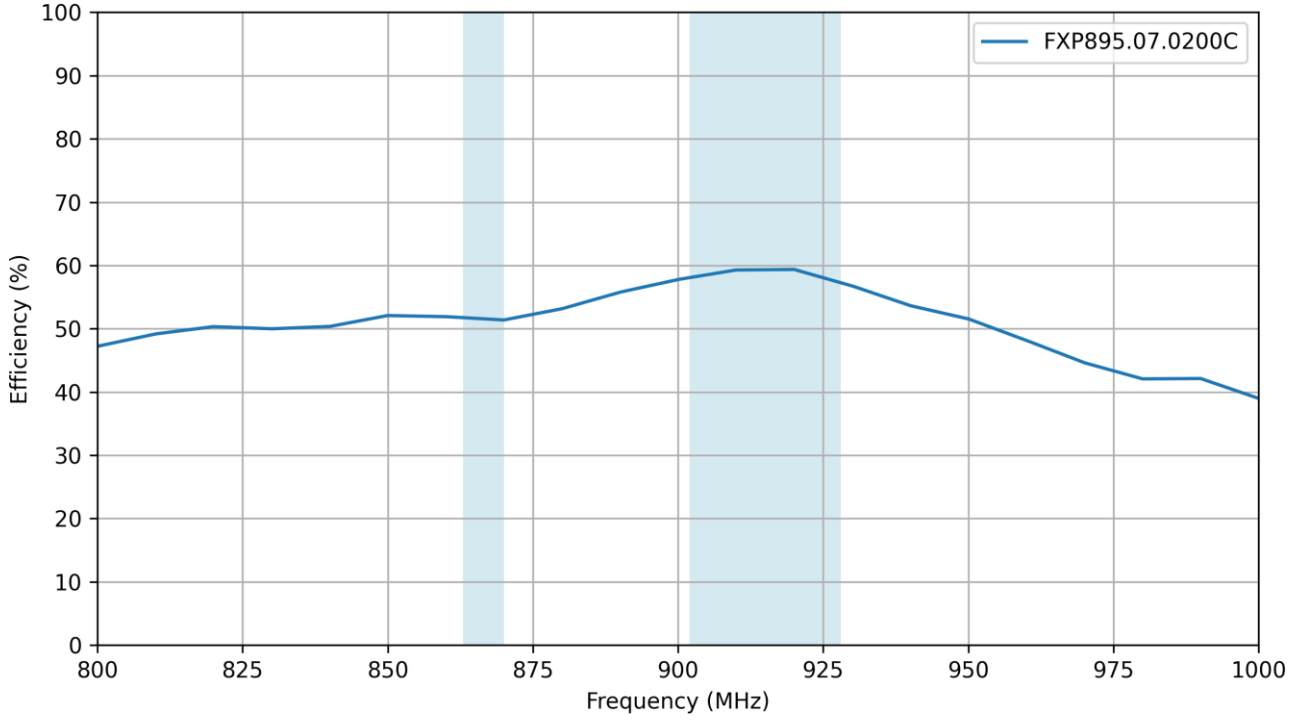

3.5 Average Gain

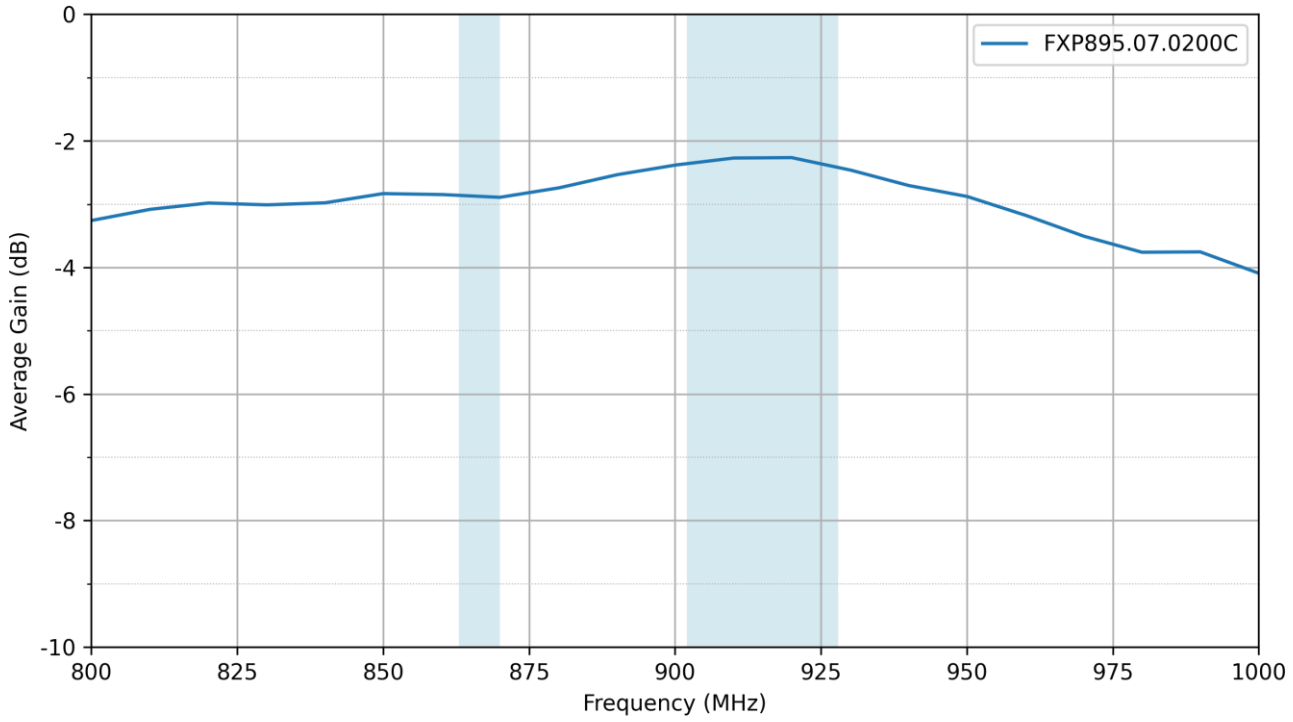

3.6 Peak Gain

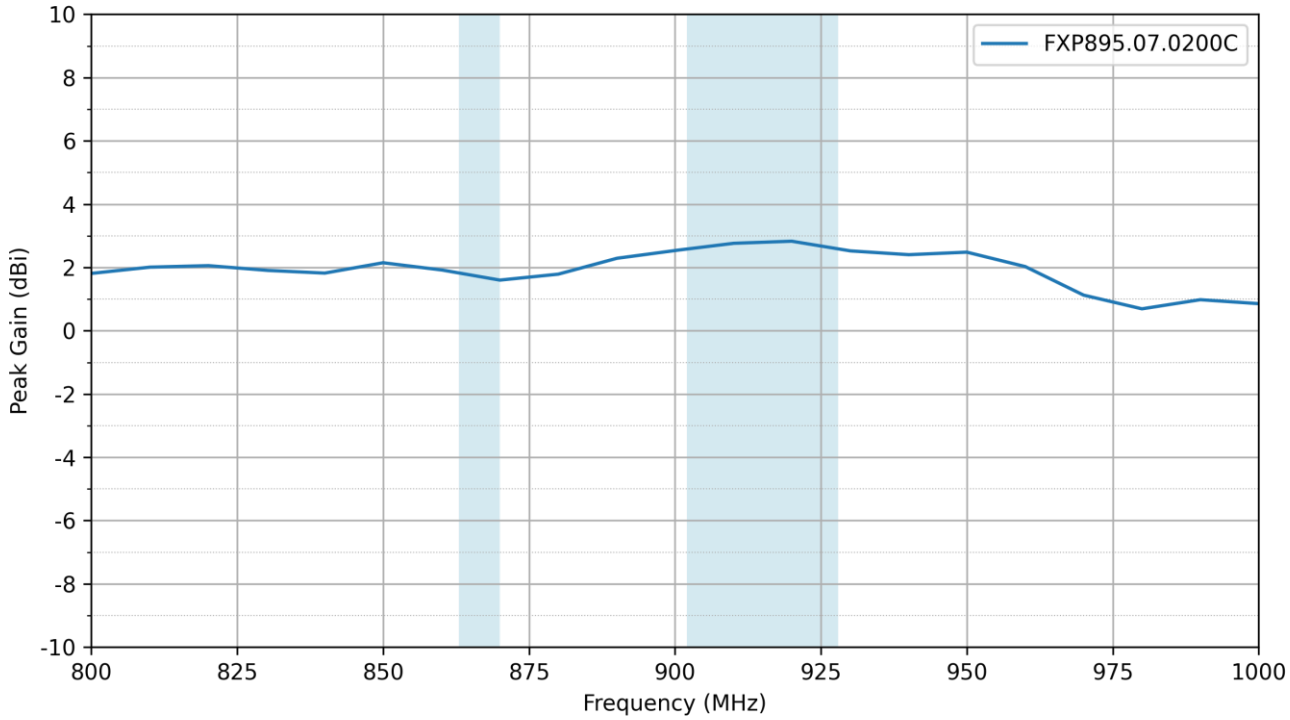
FXP895.07.0200C
Peak Gain (dBi)
10
8
6
4
2
0
-2
-4
-6
-8
-10
800
825
850
875
900
925
950
975
1000
Frequency (MHz)

4. Radiation Patterns

4.1 Test Setup

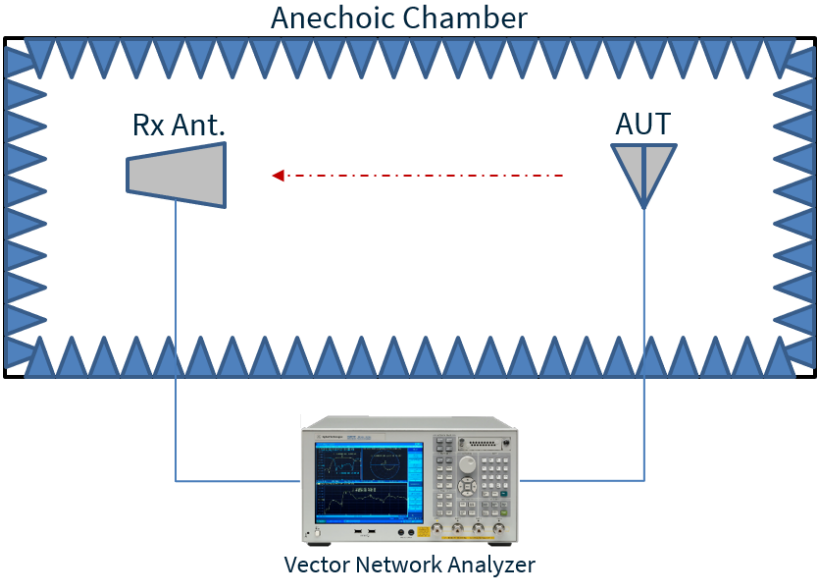

4.2 FXP895.07.0200C Patterns at 868 MHz

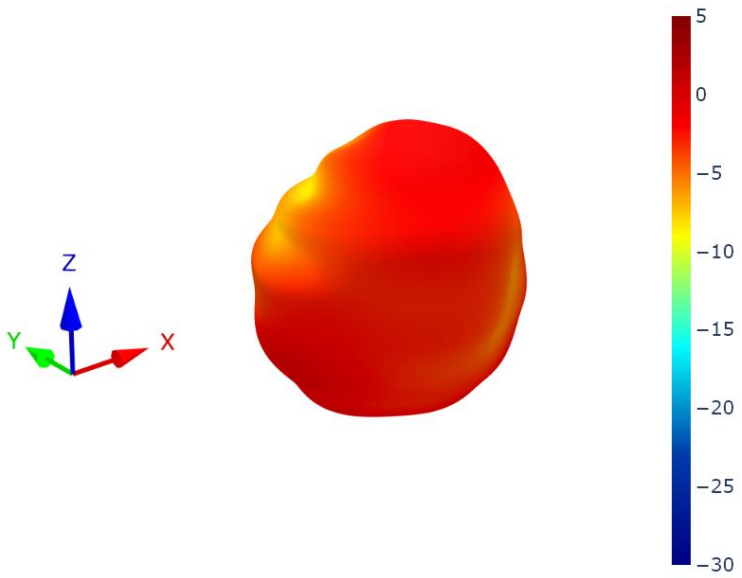

XZ Plane	YZ Plane	XY Plane

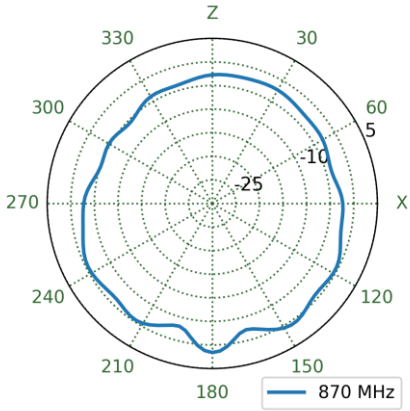

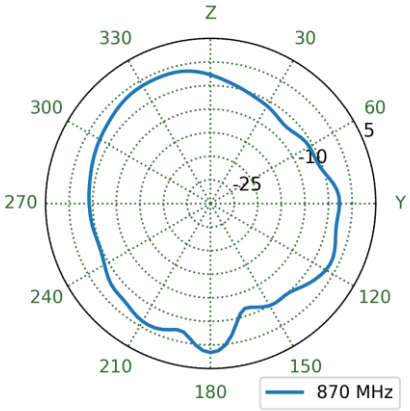

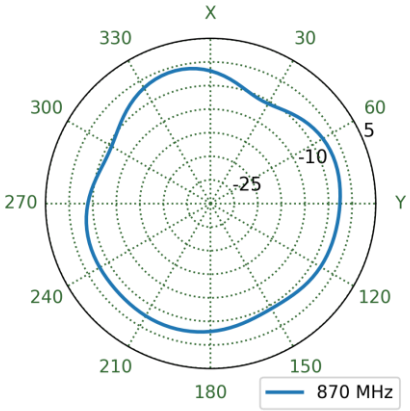

4.3 FXP895.07.0200C Patterns at 915 MHz

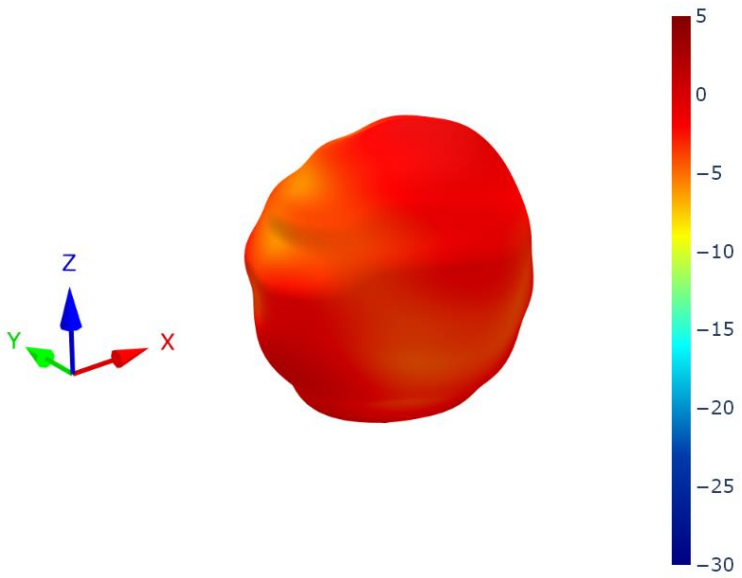

XZ Plane	YZ Plane	XY Plane

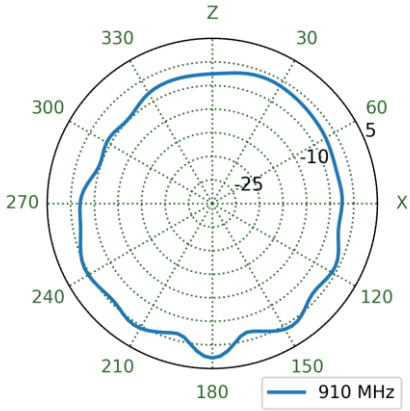

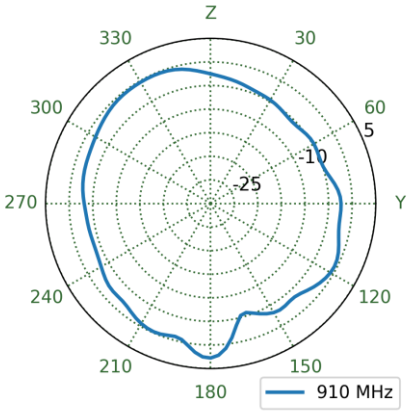

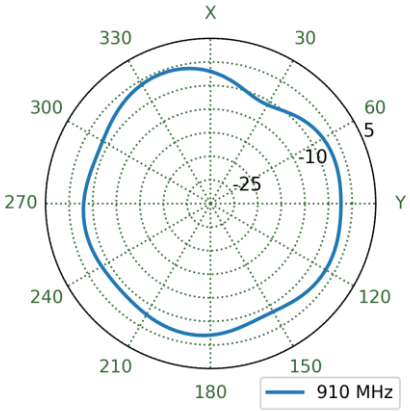

5. Mechanical Drawing

REV	ZONE	DESCRIPTION	ENG	APPROVED	DATE
D01	All	Initial design	Z. Walji	P. Frank	08/03/2023

ISO NO.: EDW.000034
STATE: Release
NOTES:
1. All material must be RoHS compliant.
2. The connector orientation has a fixed position to the antenna as per drawing.
3. Critical dimensions are marked with an inspection symbol ⬭.

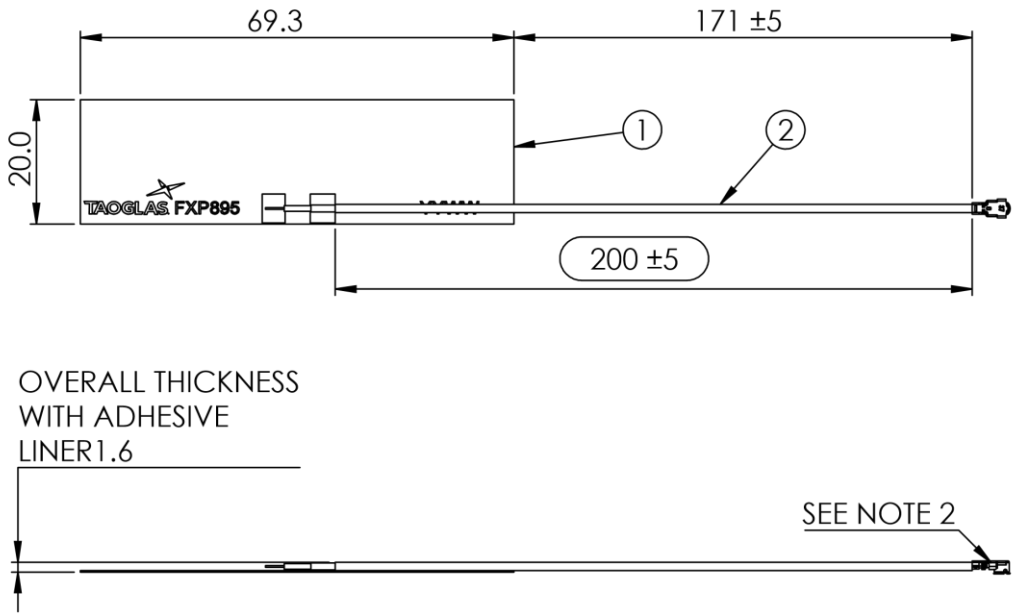

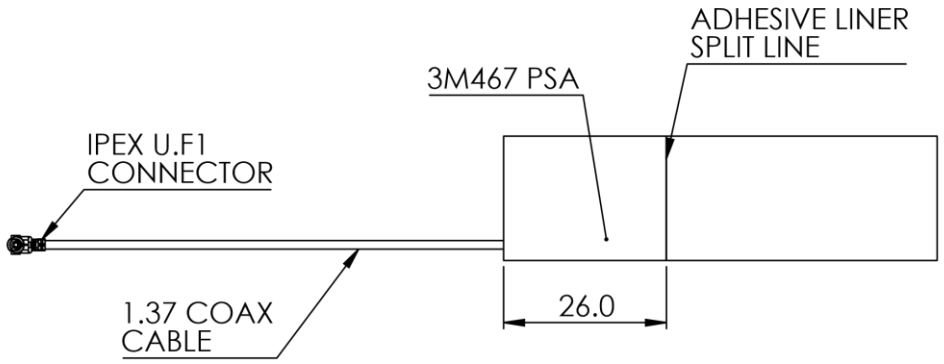

ITEM NO.	PART NUMBER	DESCRIPTION	QTY.
1	PCB.000006	FXP895 FPCB 69.3x20mm	1
2	ASY.000019	Ipex.MHF1(U.FL) to Stripped 3.9/4.3/3.2 200mmlg 1.37 Cable Assembly	1

APPROVED BY: P. Frank	TAOGLAS. TW Design Centre
CHECK BY: G. Samson	This drawing and its inherent design concepts are property of Taoglas. Not to be copied or given to third parties without the written consent of Taoglas.
DRAWN BY: Z. Walji	
DATE: 8/3/2023	TITLE: 860–928 MHz Flex PCB Antenna with 200mm 1.37 I–PEX MHF1(U.FL)
UNLESS OTHERWISE SPECIFIED TOLERANCES ON: XX.±0.5 X.±0.3 .X±0.2 .XX±0.1 .XXX±0.05	PART NO.: FXP895.07.0200C
THIRD ANGLE PROJECTION	UNIT: mm · SCALE: 1:1 · PAGES: 1/1 · REV. D01

6. Packaging

100pcs FXP895.07.0200C per PE Bag
Dimensions 300*100mm
Weight – 150g

1000pcs FXP895.07.0200C per Large PE Bag
Dimensions 450*280mm
Weight – 1.5Kg

5000pcs FXP895.07.0200C per carton
Dimensions 320*250*230mm
Weight – 6Kg

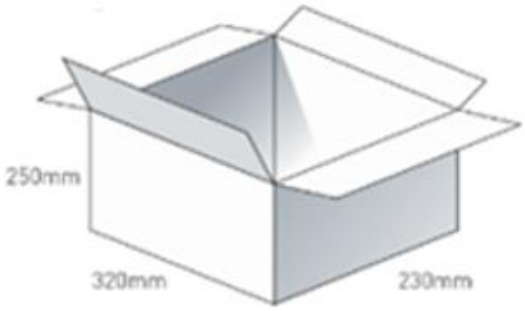

Pallet Dimensions 1100*1100*1300mm
65 Cartons per pallet
13 Cartons per layer
5 Layers

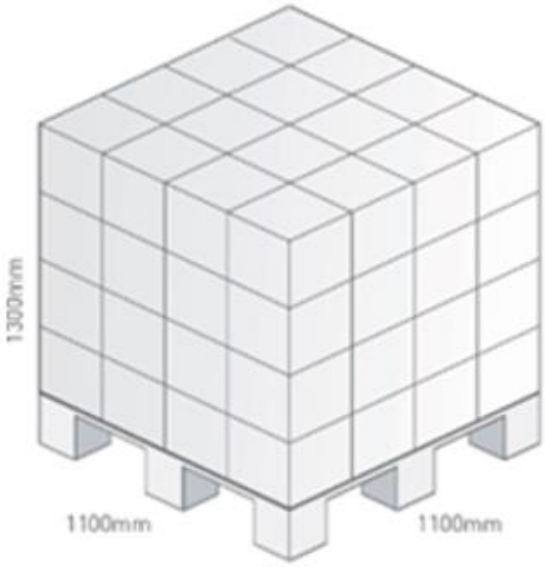

Changelog for the datasheet

SPE-24-8-015 – FXP895.07.0200C

Revision: A (Original First Release)	
Date:	2024-01-19
Notes:	First Release
Author:	Gary West

Previous Revisions

TAOGLAS

TAOGLAS®

www.taoglas.com

Mouser Electronics

Authorized Distributor

Click to View Pricing, Inventory, Delivery & Lifecycle Information:

Taoglas:

FXP895.07.0200C