X60

USER MANUAL

Two-wheel Self-balancing Scooter

⚠ WARNING

- Whenever you ride the X60 you risk death or serious injury from loss of control, collisions, and falls. It is your responsibility to learn how to safely ride the X60 in order to reduce this risk. To ride safely you must follow all instructions in the user materials, including the User Manual and Safety Video. These materials are available at our official website.
- Always wear a helmet when riding. Use an approved bicycle or skateboard helmet that fits properly with the chin strap in place, and provides protection for the back of your head.
- Never place anything on the Mats except your feet. Doing so could interfere with the Rider Detection system and allow the X60 to travel on its own, risking running into a person or property and causing injury or damage.
- Avoid obstacles and slippery surfaces that could result in a loss of balance or traction and cause a fall.
- Pay attention to all Safety Warnings and Alerts from the X60. They indicate unsafe operating conditions. You must learn about and understand the X60 Safety Alerts described in the User Manual and respond as instructed.
- Do not get back on the X60 after a Safety Shutdown until the condition that caused the Safety Shutdown has been identified and corrected.
- Never restart and ride your X60 after it has indicated an empty battery condition or performed a Safety Shutdown due to low battery. The X60 may not have enough power to keep you balanced, especially if you demand a lot of power at once. If you restart and continue riding, you risk falling. Also, you risk damaging your batteries, resulting in reduced battery life and capacity.
- While the X60 is designed to keep you upright under a variety of conditions, you can overpower the balancing capability of your X60 by aggressively leaning into and ignoring the Speed Limiter.
- Do not insert the power cord if the X60 Charge Port is wet.
- Always shut down your X60 and unplug the AC Power Cord before performing any maintenance or installing any pa
- All X60 parts must be properly installed. Never attempt to use your X60 without the LeanSteer Frame attached and secured. Using your X60 without all parts properly installed could damage your X60 and result in serious injury from loss of control, collisions, and falls.
- Use only official approved parts and accessories. Do not modify the X60. Modifications to the X60 could interfere with the operation of the X60, could result in serious injury and/or damage, and could void the X60 Limited Warranty.
- Theft detection systems, such as the type used in some libraries and retail stores, can interfere with the X60's ability to balance and/or cause the X60 to perform a Safety Shutdown. Do not ride within 5 ft. (1.5 m) of any theft detection system.

CONTENTS

X60

About this user manual 3
1.X60 Introduction 4
1.1 X60 Introduction 4
2. APP Guide 5
2.1 How to download APP 5
2.2 APP control panel 6
2.3 How to connect APP 7
3.X60 Overview 8
3.1 X60 General view 8
4.Install X60 9
4.1 Check the accessories 9
4.2 Preparation before assembly 10
4.3 Install battery pack 11
5. Function Introduction 12
5.1 OLED display 12
5.2 Power button, USB port and charge port 13
5.3 Charging method 14
5.4 How to use parking stand 15
6.Guide for safe riding X60 16
6.1 Guide for safe riding X60 16

CONTENTS

6.2 Instructions must comply 17
6.3 Prohibited instructions 18
6.4 Active safety protection measures 21
6.5 Intelligent safety warning/automatic protection 22
7.Learn to rid X60 24
7.1 Learn to rid X60 24
7.2 Turn on X60 25
7.3 Before step on 25
7.4 Step on and keep balancing 26
7.5 Forward/Backward 27
7.6 Stop 28
7.7 Turn left/Turn right 29
7.8 Getting off 30
7.9 Power assistant 31
7.10 Lock 32
8. Maintenance 33
8.1 Clean and storage 33
8.2 Battery maintenance and transportation 34
9. Main technical specification 35
10. Guarantee card 37

1.About this user manual

To learn to ride X60 safely, you must read and follow all instructions and warnings in this manual and watch the Safety videos. It is important that you follow all the safety warnings and cautions that appear throughout this manual and that you use good judgment when you ride your X60. If you have questions which could not find in this manual, please contact our sales or service department.

2.Risk of ride

X60 is a self-balancing, personal transporter that uses balancing technology. Balancing technology cannot prevent injury if you do not ride it accordingly to this manual. Whenever you ride X60, you could have serious injury from loss of control, collisions, and falls. To reduce risk of injury, you must read and follow all instructions and warnings in all the user materials includes Safety videos.

3.Preparatory work before use

Before you begin, it may be necessary to assemble your X60. The battery should be charged for >5 hours. To assemble X60 and charge the batteries for the first time, refer to this Manual. Please pay attention to the tranquil surroundings, and check every part of X60 are tightened, no damaged; and wear all the protection materials (helmet, elbow guards and knee pads).

1. X60 Introduction

The principle of self balancing scooter is based on the basic principle of a kind of ”dynamic stability”, which is the automatic balancing ability of the scooter itself. To determine the posture of the ride and the scooter by the built-in precision gyroscope, through the precise and highspeed of the central microprocessor to calculate the appropriate command, to drive the motor to achieve the balance of the effect. As X60 is a new type of personal transporter, it is difficult to define the type of the traditional classification. Some people think X60 should be a wheeled version of the unicycle, some others think it is a kind of dynamic scooter, but it is different from the traditional uniaxial wheel or biaxial Wheel Scooter. And in some formal occasions (such as the official rules of the road), X60 scooter could be called “electric personal mobility device”, commonly known as an electric scooter.

X60 is equipped with two wheeled, the width of the ordinary adult shoulder width, weight 40kg, powered by battery. During riding, it does not need brake or throttle lever. When the rider leans forward, the scooter goes forward; when the rider’s body stands straight, it stops. X60 uses the principle of dynamic balance, when the body moves, the center of gravity of the body action will change continuously to get the balance. . With wheels instead of the foot, it replaced the high precision balance of human being, low-cost, no prolusion, quietly, and convenient. X60 could run around 4-5 hours after one fully charged.

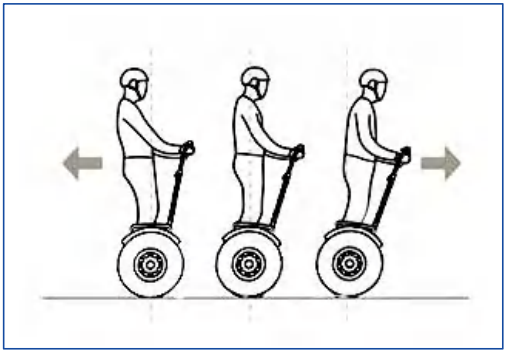

2. APP guide

2.1 How to download APP

IOS：enter “App Store” search “iRobot”, you can download APP for ios (left picture)
Android：please scan the QR code below (right picture)

IOS

Android

2.2 APP control panel

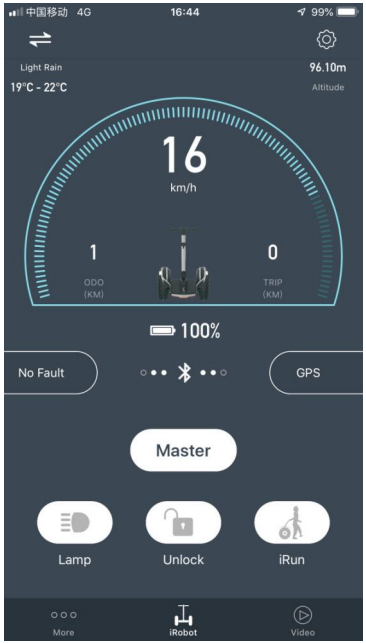

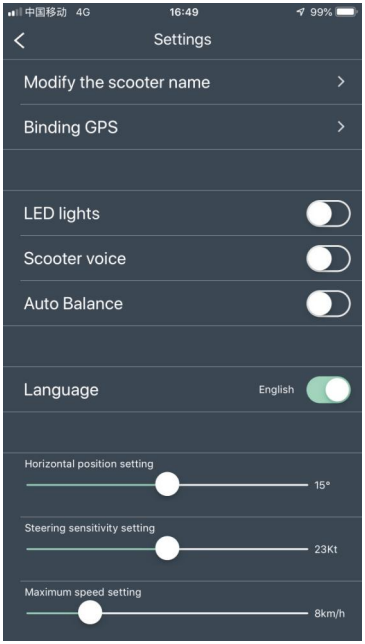

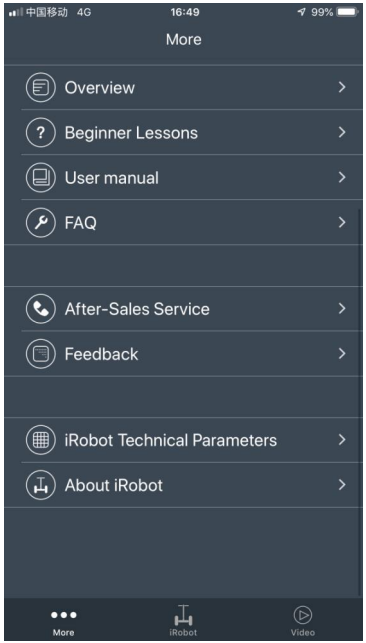

2.3 How to connect APP

1）Open “Bluetooth” for your mobile phone.

2）Open APP, press top left corner enter search the name of X60, and then, connect the name with your APP. If you connected successful, you can see all functions and settings of X60.

3. X60 Overview

3.1 X60 general view

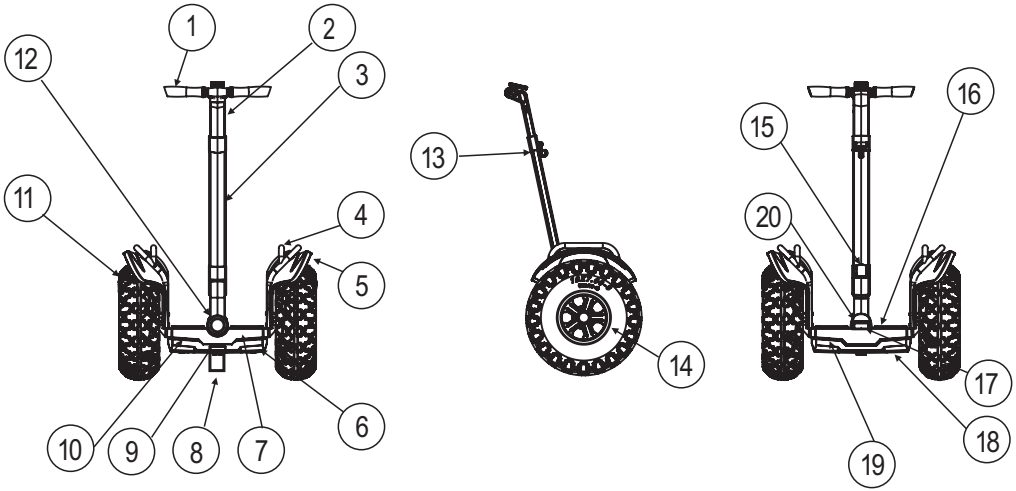

1	Handgrip	5	ABS mudguard	9	Stand press-button	13	Height adjuster hook	17	Power cover
2	LeanSteer(adjust)	6	Front chassis cover	10	Front cornering lamp	14	Moto	18	Integrated Battery Pack
3	LeanSteer	7	Chassis	11	Tyre	15	Quick coupling joint	19	Back cornering lamp
4	Rack	8	Kickstand	12	White LED lamp	16	Rubber foot pad	20	Steering cover

4. Install X60

4.1 Check the accessories

After carefully unpacking, take out the leansteer assembly, the packing parts for the handle bar, and X60 mainframe in order.

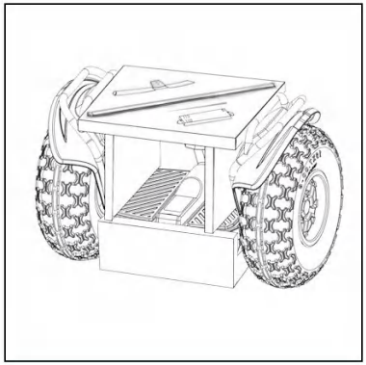

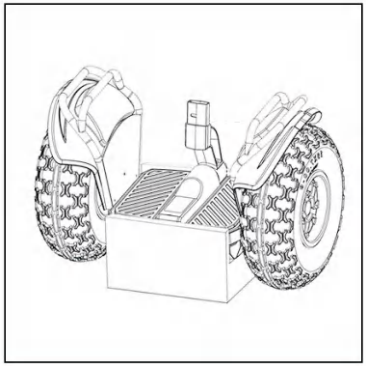

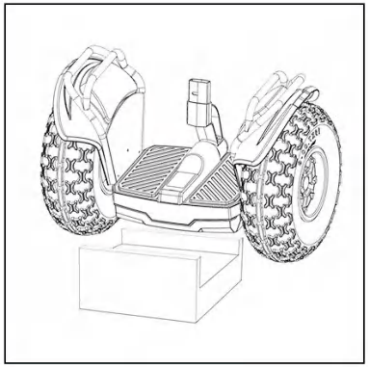

Checking the package:

X60 contains the following parts, please check after open the package. If there is anything missed, please contact the seller.			
X60 main body X 1	LeanSteer X 1	Handgrip X 1	Charger X 1
Tool X 1	Screw X 4	User manual X 1	Warranty card X 1

4.2 Preparation before assembly

Before the assembly of the X60 you should first find the Phillips screwdriver supplied with the product in the package. It should be well preserved for maintenance and transportation in the future. This screwdriver is made in compliance with the metric standard, so that you may get one either in your toolbox or from a tool store. It is suggested that you wear a pair of gloves during assembly so as not to pollute or injure your hands.

Mount handlebar and leansteer frame

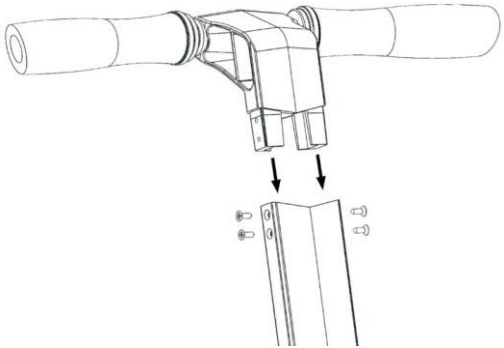

Insert handlebar into leansteer frame, and use screwdriver tighten 4pcs screws.

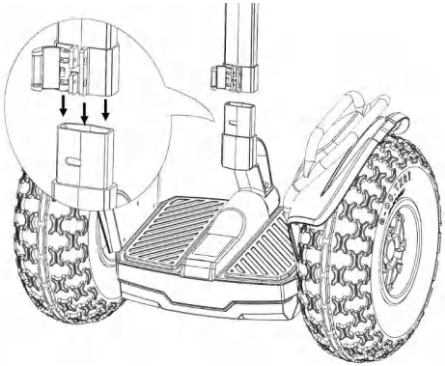

Insert leansteer frame into main frame, and fasten the clockwise joint.

4.3 Install Battery Pack (Battery Pack Replacement

Take out the “M6*20 hexagon socket cap head screw” and use 5mm hexagonal wrench to screw it in the middle hole of the battery. Take out the “M6*20 hexagon socket cap head screw” to screw it in the two side holes of the battery. Then fasten all the screws in order.

Lay X60 mainframe flatwise with the battery assembled therein and fasten up the screws.

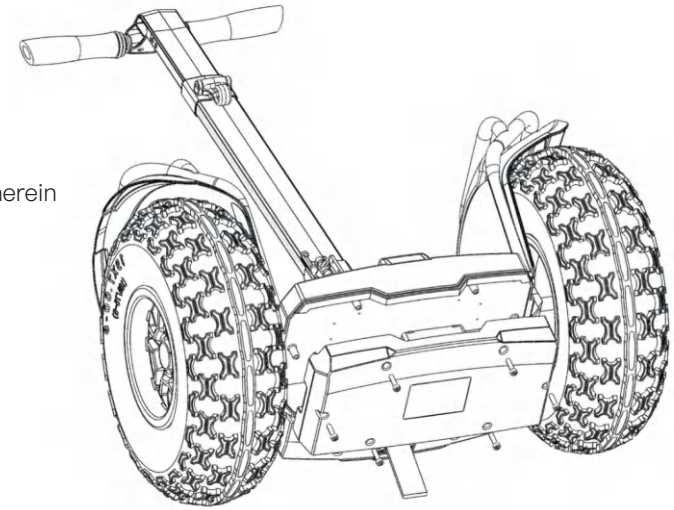

5.1 OLED display

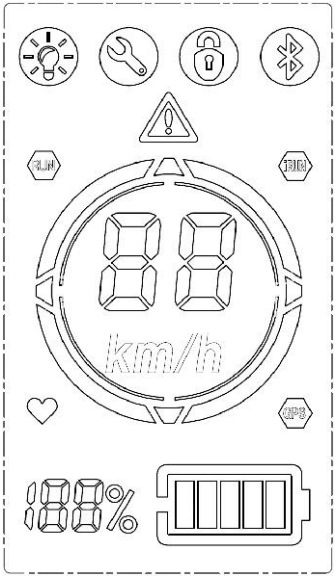

Light icon	Fault icon	Lock icon	Bluetooth icon
Warning icon	Speed icon	Battery icon	Battery percentage
Skillful mode	Beginner mode	Pulling mode	GPS

5.2 Power button, USB port and charge port

At the mainframe back of X60, there is a USB charging port which supports standard USB equipment and provide 5V/1A current. You can charge the mobile phone or other USB devices with input <150mA charging. Picture 1: Power button, charge port and USB port position.

Power switch functions:

a) Turn off state, press power switch and turn on X60.

b) Turn on state, press power switch 2 seconds can turn off X60.

c)Turn on state, press power switch can turn on LED lamp.

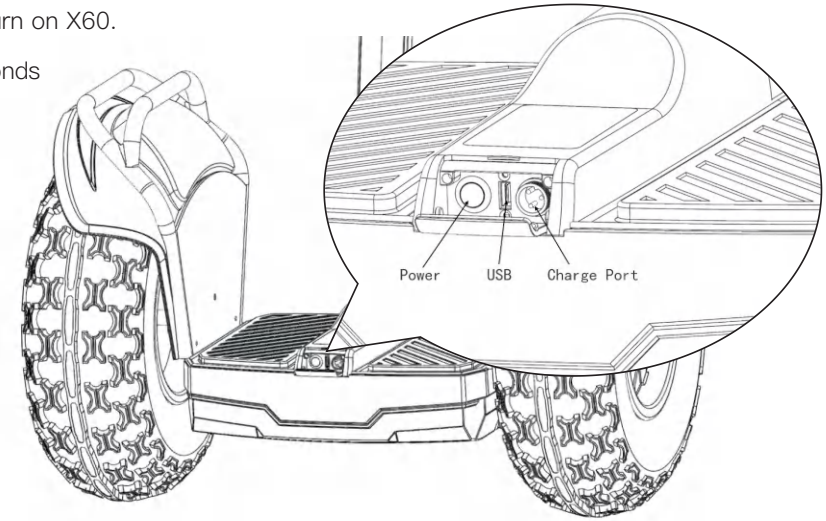

5.3 Charging method

1st step: Find the charging port at the back of X60 main frame, open the back cover, to check if the charging port is dry firstly.

2nd step: Connect the charging port with the charger (100~240V, global common), then plug it into the power AC supply.

3rd step: When the LED indicator on the charger turns red, which means the scooter is charging normally; when the indicator turns green, the scooters is charged fully and please stop charging, unplug the charger port to save the battery life.

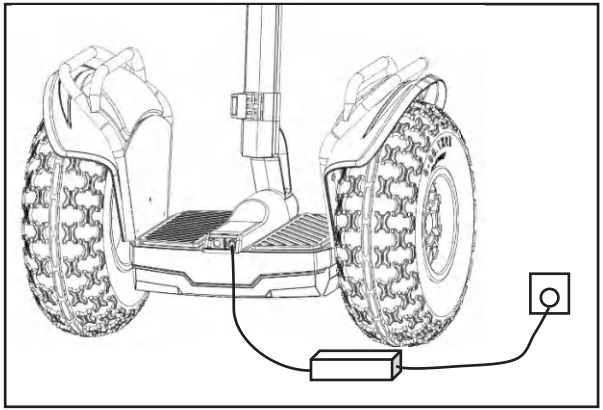

5.4 How to use parking stand

* How to release the packing stand down: use your tiptoe press the button of stand, the packing stand will release automatic.

* How to close the packing stand: use your tiptoe push the stand to the top back side.

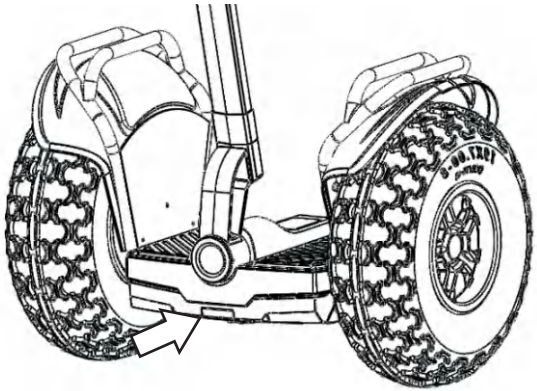

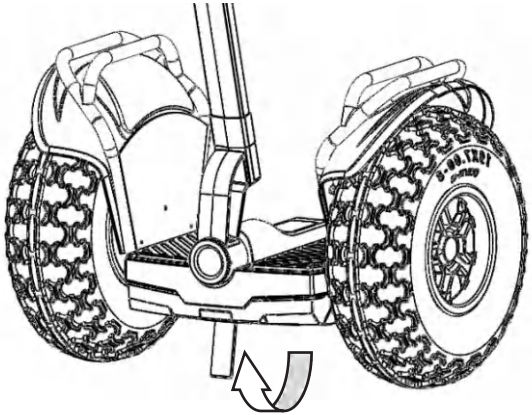

6. Guide for safe riding X60

6.1 Guide for safe riding X60

Apart from an entertainment robot, X60 is also a transportation vehicle which may have the risks similar to those of all other commuting tools. However, if you follow the information in Chapter 4“Guide for Safe Riding” in this manual, it may maximize the safety of you yourself and others. By so doing, it will not cause heavy injury to you even if unrecoverable faults happen to X60 or something unexpected happens to your body.

There is one thing you should remember. During riding, you should be cautious and keep a reasonable and safe distance with other people and transportation means. This is because although you ride your X60 on the road or in a public occasion in compliance with the Guide for Safe Riding, you may be subject to the risks resulted from improper driving or operation by other people or of other transportation means. It is just as you may be injured by other transportation means when you are walking or riding a bike.

6.2 Instructions must comply

Understand and comply with local traffic rules.

1)Wear helmet, wrist pads, elbow and knee pads, before riding for protection.

2)Check the battery status with the power button before each riding. If there is less than 60% of power remaining, do not use it for a long journey. You may not get the range you require for a long journey.

3)Check your X60 to make sure that there are no loose, dropped or damaged parts, and there are no abnormal sounds or continuous warning during riding.

4)Before riding, make sure that you are in good condition and sober without taking in any wine, sedative agent or stimulant at least 6 hours before.

6.3 Prohibited Instructions

Do not use it in any place that is not allowed access by the laws of the relevant country/region or by the related management units.

Remember to keep your body at least 5cm distances from the operation bar. NEVER lean your body against them, this can cause the unit to lose balance and can cause a crash.

Remember, when you are on X60, you will be 20 cm or taller than usual, so watch over your head as you approach a door frame, a door, any tree branch, various marks, boards or other low barriers above you.

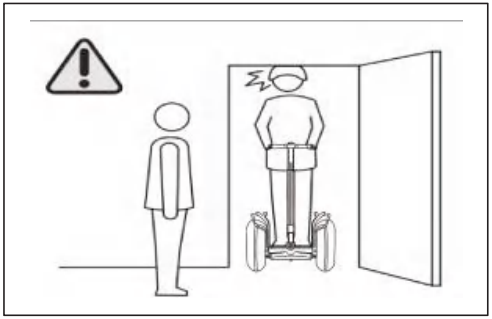

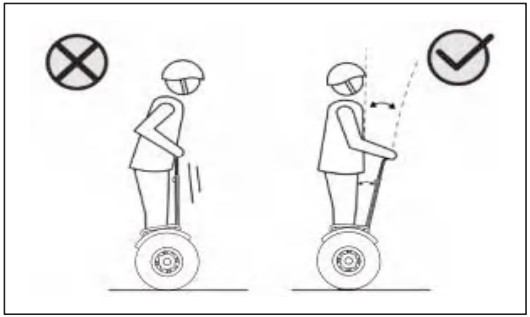

Do not use it in the areas that are dangerous or go against the requirements for use of X60, like in a place with pits/fissures, slopes of 35 degrees or above, or puddles more than 10cm deep. Or 4 inches.

6.3 Prohibited Instructions

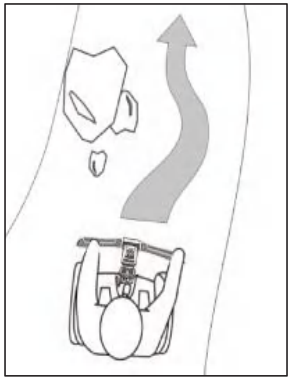

Do not ride X60 upstairs or downstairs, do not lift the X60 off the ground in any case (such as passing a deceleration strip), and do not ride it on the road shoulder or stair with only one wheel on them.

Do not ride it on the motorway.

Do not ride X60 with two or more persons on it, especially with a baby carried. Do not put both of your hands off the operation bar.

Dot not let the young (under the age of 14) and the aged (above the age of 65) ride X60 alone, and they must be accompanied during riding. Do not allow the person with pregnancy, excessive drinking, mental disorder, heart disease and limited action ability (especially the disabled) to ride it.

6.3 Prohibited Instructions

Do not ride X60 in an unsafe environment, especially a place subject to fire disaster or explosion from flammables, steam gas, liquid, dust and fiber etc.

Avoid riding backward in high speed or making sharp turns during riding backwards. Do not make phone call during riding.

Do not ride it in poor weather and road condition when it rains or snows with frozen, ponding and slippery road surfaces.

Do not go against other provisions in this manual, especially what are clearly indicated in “Warning” or “Danger”.

6.4 Active safety protection measures

Please read this manual carefully and watch the safety driving instructions video, understanding and recognition this content.

Please do not let others drive your X60, unless the person who has already read the manual and watch the safety driving instructions video.

Please wear a helmet and fastened chinstrap while driving.

Wear an examined helmet that is suitable for your head form, equipped with a belt and able to protect the back of your head with its belt fastened whenever you ride X60. The rider can also wear gloves, eye equipment, waist support, knee pad and other protecting equipment based on the riding conditions and past experiences.

Do not ride in poor condition, cannot follow the indications or warnings in this manual, or have just taken alcohol or drugs.

Get off X60 and charge it for safety in the case of low power, successive warning and limit speed.

Please place the goods your carry in the front or the side storage cases or in your backpack instead of placing it on the foot mat. The balance of X60 will be influenced if the operation bar bears the weight of more than 5 kilograms.

Please make sure the X60 is switched off before carrying it, or otherwise injury may be incurred by the quick rotation of the wheels. It is appropriately suggested that two people move the X60 in joint effort. Do not lift the X60 by the fender, because your finger may be clipped between the wheel and the fender.

Please check whether there is any loose screw or damaged part before each ride. Do not power-on X60 until all faults are eliminated.

6.5 Intelligent safety warning/automatic protection

In the following cases, X60 will limit its speed automatically, namely limit the maximum speed to a range that will keep you safe:

Advancing in over speed when riding X60 in excessive speed (beginner mode 8km/h, and skillful mode km/h), the leansteer of X60 would generate pushback force to push the rider in the backward direction to stop X60 from accelerating. This means the limit speed mechanism of X60 is triggered because you are riding too fast. Now please adjust your body to keep at least a fist distance from the operation bar. Or X60 may lose balance and fall down if you keep pressing the operation bar or leaning your body against it.

Overloading or long staying on a slope, the intelligent safe warning will be triggered and the foot mat will recline to remind the rider to get off in the following cases: staying at the steep slope, in a deep pit, overweight of rider or long staying on the slope results in enduring overloading X60. At this moment, the rider should get off and push X60 ahead by assistant mode.

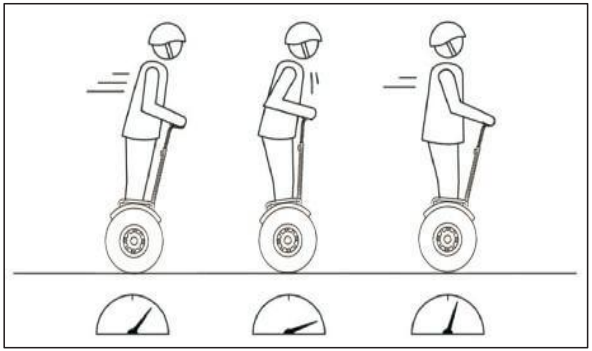

Automatic speed limiting

6.5 Intelligent safety warning/automatic protection

Critical battery power: You should get off immediately and charge the X60 if the intelligent safety warning is triggered when you ride the unit in extremely low power (usually less than 10%). the foot mat will recline to press the rider to get off the unit, if the rider goes on riding the unit can stop suddenly.

Backward in fast speed

go upslope or long staying on slopes

Low power alarm

7. Learn to ride X60

7.1 Learn to ride X60/C60

For beginners, you should choose proper places to ride, either indoor or outdoor with an area of at least 16 square meters (4m×4m). In addition, it should be flat without any wet or slippery surface, barrier, automobile, bike, pet, children or other objects that would distract your attention.

Get instruction from an experienced person who accepted correct training and totally understood its working principles. For safety purpose, please wear safety helmet and other protective gears.

Move X60 to the center of the places.

You should be proficient in using all the functions of the APP functions.

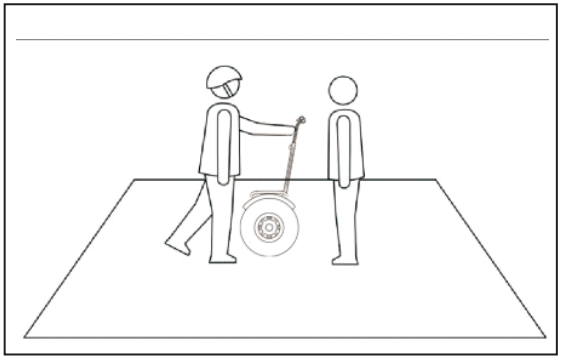

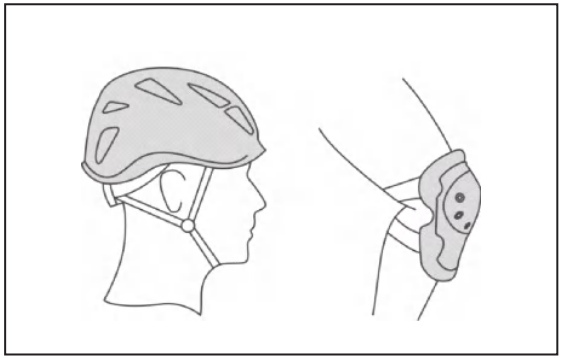

7. Learn to ride X60

7.2 Turn on X60

First turn on “Power Switch” on the body of X60, when you hear reminding voice “welcome to use smart scooter” and see the light on Signal Indicator, it means X60 is started normally.

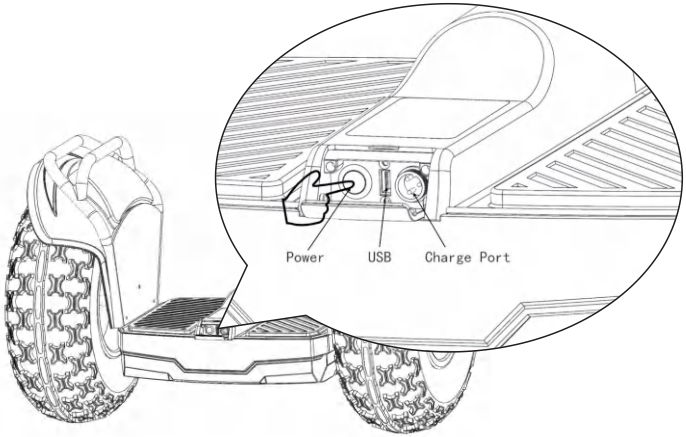

7.3 Before step on

Make sure the pedals are on horizontal level when power on.

For beginners, please do not hurry to ride it, learn following instructions carefully to protect yourself from any possible injuries.

Standing directly behind X60, hold the handlebar grip with one hand or two hands, keep the turning pipe upright (almost in no stress), adjust the handlebar grip until the pedals become horizontal, then step on pedals of X60.

7.4 Step on and keep balancing

1. Holding the handlebar grip with two hands, and make sure the pedals are on horizontal level;

2. Step on pedals with one foot;

3. place your center of gravity on the pedal gradually, and raise another foot (thinking how you get upstairs);

4. Avoid moving the turning pipe, and then raising another foot slowly and putting it on the pedal. Just imagine that you are standing on the ground, keep calm and look ahead instead of looking down when you stand on X60, trust X60 self-balancing. Please make reference to the postures in the following pictures.

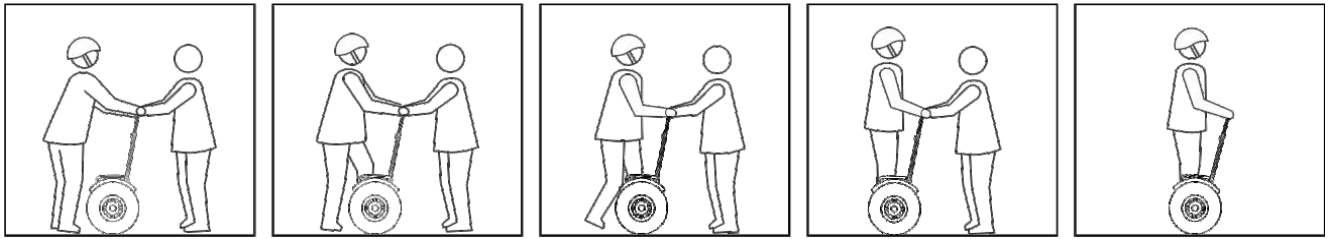

7.5 Forward/Backward

Lean your body forward slowly, and feel the moving of X60, then recover your posture upright gradually to feel the deceleration and stop. Just be moderate and make several repetitions to adapt to the movement controlled by the body gravity.

Turn your head around and look behind, lean your body backward slowly to make X60 move backward gradually, then recover your posture upright gradually to feel the deceleration and stop. Make several repetitions and avoid falling down by bumping against the wall or other barriers.

Please don't backward if you can't go forward, unless you just reverse only a few steps. You'd better turn left or right then go forward instead of backward.

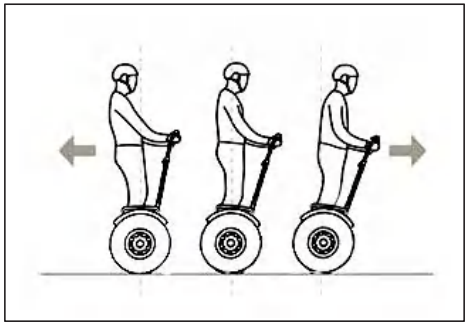

Backwards Balanced Forward

Avoiding waggling in the forward and backward direction

7.6 Stop

Let the gravity of your body moves against the direction which is moving. It can make X60 stop. Methods as the following:

1. When you are riding ahead, pull back your buttock gently (as you are sitting down) to stop X60

2. After X60 stops, distribute your body weight equality on the foot pad to achieve balance. And if you go on tilting backward, X60 will move backward (not recommended);

3. Appoint a place, then practice stopping on this place and keep balance.

Standard stop figure

7.7 Turn left/Turn right

As you turn the steering bar in the left or right direction, X60 will turn in the corresponding direction.

1. Practice making turns in the original place. Slowly turn the leansteer bar as you wish, X60 will turn at the original place. You can align the leansteer bar until
X60 reaches the position you expect. You can repeat practices to master the skill.

2. Practice turning during its movement. You can try to make turns during slow movement after you are familiar with going forward/backward and making turns at the original place. Keep the knees slightly bent and tilted toward the direction to turn. The angle is the same with that of the leansteer bar. Repeat more times and master the skill.

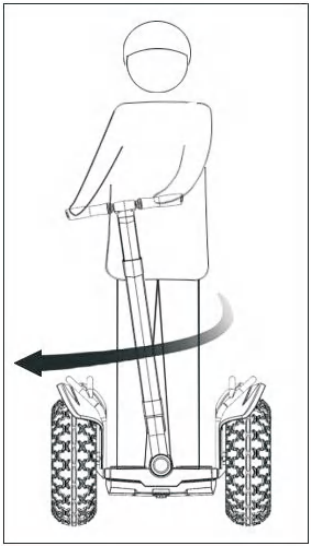

Turn Right

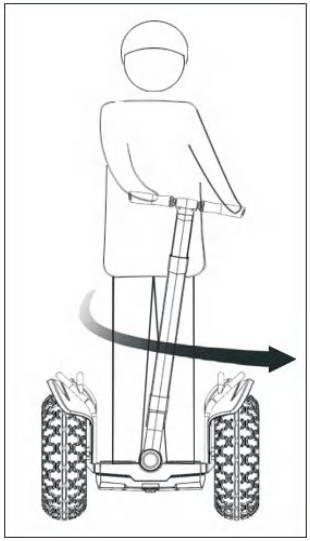

Turn Left

7.8 Getting off

Getting off is like walking down a stair. When you get off X60 at the first time, you can ask your instructor to help you hold the leansteer bar.

The specific method is as following:

1. Keep X60 balanced by holding the leansteer bar with both hands and put your feet off the foot mat one by one. tabilize your body and do not move the leansteer bar to make turn when you get off.

2. Do not put your hands off the steering bar before X60 is switched off even if you have got off, otherwise X60 will move forward, possibly causing casualties and losses.

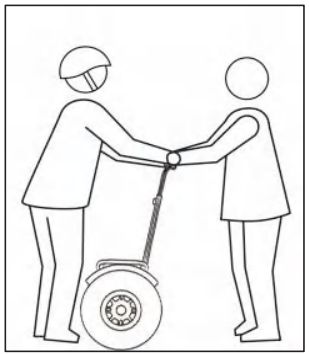

7.9 Power assistant

After getting off, press your APP“ pulling model”, X60 will turn to assistant mode from the standby mode. And it will go forward/backward or make a turn gently according to your hand movement to the leansteer bar.

We recommend you use assistant mode to pass through the bumps, stairs, unsafe or inappropriate landform along the road side.

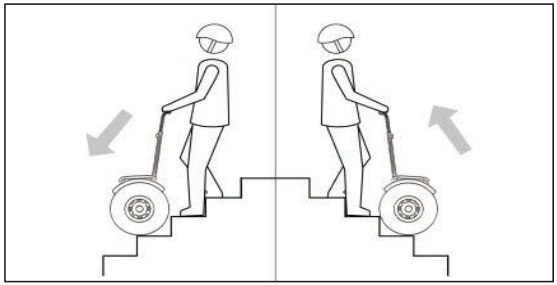

Get upstairs/downstairs by assistant mode.

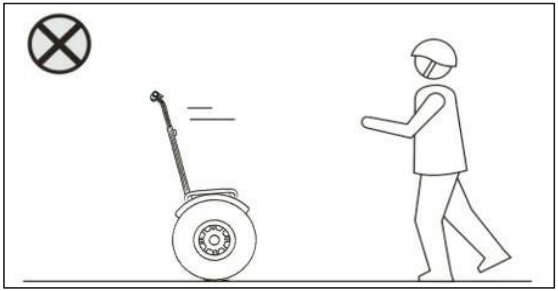

Do not let X60 go by itself in assistant mode.

7.10 Lock

After getting off X60, press your APP “Lock”, X60 will be locked. Thus, you can keep the scooter in secured locked condition when you park the X60.

After locking X60, it will give voice prompts“Locked” when it is moved or touched.

Locked scooter itself cannot stop the thief directly carry away X60. Therefore, the best way to ensure the safety of X60 is to put X60 in the safe place of the interior. X60 can easily enter the elevator, pass through ramps and slopes into the interior. When you lock and leave X60 away in public area temporarily, please make sure you can hear the alarm and X60 is in your sight.

8. Maintenance

8.1 Clean and Storage

In order to keep X60 in the best performance please clean your X60 after use.
You can use the soft cloth dipped in a small amount of water to clean X60. Glasses wiper cloth is recommended
X60 can be washed by household shower hose or garden hose (water pressure is less than 1MPa, or 145PSI to flush tires and fenders. Please dry it as soon as possible after hosing and place X60 in a ventilated condition to avoid the iron parts rusting.
If it is difficult to clean some stains on the plastic surface, toothpaste can be used, using the toothbrush repeatedly scrub, and then use the wet cloth to clean. This method can also be used to clear the surface scratch.
When not in use, place X60 in dry and cool place indoor, and avoid storing X60 outside for long time. Sun exposure and extreme hot / cold outdoor environment will accelerate X60 aging.

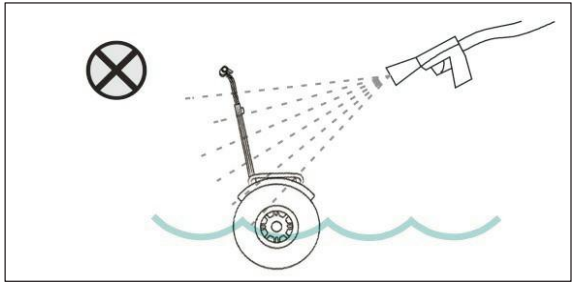

WARNING: When clean X60, make sure it is turned off, the charging cable is unplugged and the charging port is shut! Otherwise electric shock or serious damage may happen. High pressure hosing or soaking in water are strictly prohibited in scooter cleaning which may lead to water damage of internal parts and components.

8.2 Battery Maintenance and Transportation

Battery pack is the component needs to pay most attention on the maintenance. Battery may still performance well after 30,000~40,000km mileage under good maintenance; and failure maintenance will reduce the capacity or damage the battery after few months.

To try to extend the battery life, please follow the following tips for regular inspection and maintenance:

1. Please read the notes on the battery pack surface and follow the instruction.

2. Please keep the battery pack in the dry environment at temperature from 0C to 40C. Extreme high or low temperature can affect battery life. Please avoid storing or using the battery in the environment below –20C or above 50C.

3. Please keep the battery pack in dry and cool environment. In the extreme moist environment, the battery internal condensation probably causes the battery damaged quickly. If the wet environment cannot be avoided, please use the large bag to seal the battery.

4. In daily use, please avoid the battery completely exhausted and then charged. If the power is only 1~2 grids, please charge as soon as possible. After use, please fully charge the battery. Frequent charging does not affect the battery life, and longtime exhausted status will reduce capacity and life of the battery.

5 if the battery is installed on the X60, the battery will continue to consume. Thus:

a) For a short time, storage (less than 30 days), or less than 30 days of transport time, the battery should be fully charged.

b) For long time storage (more than 30 days), or transport time for more than 30 days, the battery should be fully charged, and then removed from X60, stored in a cool dry place.

c) For a long time (more than 180 days), please recharge the battery every 3 to 4 months to maintain the battery capacity and life.

9. Main Technical Specification of X60 series

X60

X60/X60Plus Technical Parameters			
		X60	X60 Plus
Material	Main Material	Magnesium Alloy + Aluminum Alloy + ABS + Rubber	
Main Parameters	Max Speed	20KM/H	
	Max Mileage	35 ~ 40KM	**75 ~ 80KM**
	Max Load	150KG	
	Min Turning Radius	0°	
	Max Climbing	≤ 35°	
	Height of Pedal	221mm	
	Max Height of Ground	125mm	
	Tire Size	19 inch	
	Standard Pressure	15 PSI or 1.0 bar or 105 kpa	
	Long*Width*High	836 * 490 * 560mm (handlebar height 1080 ~ 1380mm Adustable)	
	Net Weight	41.2KG	**43.2KG**
	Gross Weight	49.8KG	**51.8KG**
	Packing Size	91 * 52 * 63CM	
	Working Temperature	-10 ~ +40 ℃	
	Storage Temperature	-20 ~ +50 ℃	
	Waterproof	IP56	
	Begginner Mode	Yes, set via APP	
	Applicable Terrain	Cement Road / Asphalt road / Grass / Gravel Road / Sandbeach	
Motherboard Parameters		Dual System	
Battery Parameters	Battery	SAMSUNG 18650 Lithium Battery	
	Rated Voltage	57.6V	
	Max Charging Voltage	67.2V	
	Rated Capacity	7.8Ah / 456Wh	**15.6Ah / 912Wh (Dual Batteries)**
	Intelligent BMS	Overvoltage Protection / Undervoltage Protection / Short circuit Protection/ Overheating protection, Automatic sleep / Wake	
Motor Parameters	Motor	Brushless DC Motor	
	Rated Power	1500W *2 = 3000W	
Charger Parameters	Input Voltage	100 ~ 240V	
	Output Voltage	67.2V	
	Output Current	2A	
	Rated Power	120W	
	Charging Time	4 ~ 5 Hour	**6 ~ 7 Hour**
Operating Mode		Standby mode / Pulling mode / Speed limit driving mode / Normal driving mode / Remote mode / Lock mode	
Display Panel		4.2'OLED Display / Battery / Speed / Mileage / Lamp / Lock / Bluetooth	
Light		Front lamp / Ambient light / Left / Right turn light / Brake light / Backup light	
Wireless Connections		Bluetooth	
APP		Yes	
Voice		Yes	
USB Charging			**Yes (5V/1A)**
Bluetooth Music			**Yes**
Colour		Black / White / Silver / Space gray	
Certifications		CE / FCC / RoHS / MSDS / UN38.3 / Air transport report / Sea transport report	

RECORD			
Customer Name		Purchase Date	
Contact Address			
Product Model		Invoice Number	
Serial Number			
Distributor			

SERVICE RECORD						
Repair Date	Repair Details					Remarks

EXPLORE, NEVER GIVE UP...

This device complies with part 15 of the FCC Rules. Operation is subject to the following two conditions: (1) This device may not cause harmful interference, and (2) this device must accept any interference received, including interference that may cause undesired operation.

Any Changes or modifications not expressly approved by the party responsible for compliance could void the user's authority to operate the equipment.

Note: This equipment has been tested and found to comply with the limits for a Class B digital device, pursuant to part 15 of the FCC Rules. These limits are designed to provide reasonable protection against harmful interference in a residential installation. This equipment generates uses and can radiate radio frequency energy and, if not installed and used in accordance with the instructions, may cause harmful interference to radio communications. However, there is no guarantee that interference will not occur in a particular installation. If this equipment does cause harmful interference to radio or television reception, which can be determined by turning the equipment off and on, the user is encouraged to try to correct the interference by one or more of the following measures:

-Reorient or relocate the receiving antenna.

-Increase the separation between the equipment and receiver.

-Connect the equipment into an outlet on a circuit different from that to which the receiver is connected.

-Consult the dealer or an experienced radio/TV technician for help.

FCC Radiation Exposure statement

The device has been evaluatec to meel general RF exposure requirement. The device can be used in porlable exposure condition without restriction.