TEST REPORT
FCC ID:2BL7H-G4

Report Number.....:	**ZKT-241113L15319E-3**
Date of Test.....	Oct. 20, 2024 to Oct. 31, 2024
Date of issue.....:	Oct. 31, 2024
Total number of pages.....	40
Test Result .....:	PASS
Testing Laboratory..... :	**Shenzhen ZKT Technology Co., Ltd.**
Address ..... :	1/F, No. 101, Building B, No. 6, Tangwei Community Industrial Avenue, Fuhai Street, Bao'an District, Shenzhen, China
Applicant's name .....:	**Shanghai olymmons technology co.,ltd**
Address ..... :	406 Room Biulding A, No. 699 Tongle Road, Dongjing, Songjiang District, Shanghai
Manufacturer's name .....:	**Shanghai olymmons technology co.,ltd**
Address ..... :	406 Room Biulding A, No. 699 Tongle Road, Dongjing, Songjiang District, Shanghai
Test specification:	
Standard.....:	FCC CFR Title 47 Part 15 Subpart C Section 15.247 ANSI C63.10:2013
Test procedure..... :	/
Non-standard test method .....:	N/A
Test Report Form No.....:	TRF-EL-112_V0
Test Report Form(s) Originator..... :	ZKT Testing
Master TRF .....:	Dated: 2021-04-22

This device described above has been tested by ZKT, and the test results show that the equipment under test (EUT) is in compliance with the FCC requirements. And it is applicable only to the tested sample identified in the report.
This report shall not be reproduced except in full, without the written approval of ZKT, this document may be altered or revised by ZKT, personal only, and shall be noted in the revision of the document.

Product name.....:	**Projector**
Trademark .....:	OLYMMONS
Model/Type reference..... :	G4,G1,G2,G3,G5,G6,G7,G8,G9,G10,H1,X1,X2,X3,X6,X8,X9,A1,A2,A3,A6,A9,Q1,Q2,Q3,Q6,Q9,S1,S2,S3,S6,S9,HY300,G11,G12,G13,G14,G15,G16,G17,G18,G19,G20,HY300 Pro,S1 Pro
Ratings..... :	INPUT:100-220V~50/60Hz 2.0A Max OUTPUT:27.0V⎓ 1.1A, 29.7W

Testing procedure and testing location:

Testing Laboratory.....:	Shenzhen ZKT Technology Co., Ltd.
Address..... :	1/F, No. 101, Building B, No. 6, Tangwei Community Industrial Avenue, Fuhai Street, Bao'an District, Shenzhen, China
Tested by (name + signature).....:	Jim Liu
Reviewer (name + signature)..... :	Jackson Fang
Approved (name + signature)..... :	Lake Xie

Table of Contents

Page
1. VERSION 5
2. TEST SUMMARY 6
2.1 TEST FACILITY 7
2.2 MEASUREMENT UNCERTAINTY 7
3. GENERAL INFORMATION 8
3.1 GENERAL DESCRIPTION OF EUT 8
3.2 Test Setup Configuration 10
3.3 Support Equipment 10
3.4 Test Mode 11
3.5 EQUIPMENTS LIST FOR ALL TEST ITEMS 12
4. EMC EMISSION TEST 14
4.1 Conducted emissions 14
4.1.1 POWER LINE CONDUCTED EMISSION Limits 14
4.1.2 TEST PROCEDURE 14
4.1.3 DEVIATION FROM TEST STANDARD 14
4.1.5 EUT OPERATING CONDITIONS 15
4.1.6 Test Result 16
4.2 Radiated emissions 18
4.2.1 Radiated Emission Limits 18
4.2.2 TEST PROCEDURE 18
4.2.3 DEVIATION FROM TEST STANDARD 19
4.2.4 TEST SETUP 19
4.2.5 EUT OPERATING CONDITIONS 20
4.2.6 TEST RESULTS 20
5. RADIATED BAND EMISSION MEASUREMENT 29
5.1 Test Requirement: 29
5.2 TEST PROCEDURE 29
5.3 DEVIATION FROM TEST STANDARD 30
5.4 TEST SETUP 30
5.5 EUT OPERATING CONDITIONS 30
5.6 TEST RESULT 31
6. CONDUCTED BAND EDGE AND SPURIOUS EMISSION 33
6.1 Limit 33
6.2 Test Setup 33
6.3 Test procedure 33
6.4 DEVIATION FROM STANDARD 33
6.5 Test Result 33
7. 20DB BANDWIDTH & 99% OCCUPIED BANDWIDTH 34
7.1 Test Setup 34
7.2 Limit 34
7.3 Test procedure 34
7.4 DEVIATION FROM STANDARD 34
7.5 Test Result 34

8. MAXIMUM PEAK OUTPUT POWER 35
8.1 Block Diagram Of Test Setup 35
8.2 Limit 35
8.3 Test procedure 35
8.4 DEVIATION FROM STANDARD 35
8.5 Test Result 35
9. HOPPING CHANNEL SEPARATION 36
9.1 Test Setup 36
9.2 Test procedure 36
9.3 DEVIATION FROM STANDARD 36
9.4 Test Result 36
10.NUMBER OF HOPPING FREQUENCY 37
10.1 Test Setup 37
10.2 Test procedure 37
10.3 DEVIATION FROM STANDARD 37
10.4 Test Result 37
11. DWELL TIME 38
11.1 Test Setup 38
11.2 Test procedure 38
11.3 DEVIATION FROM STANDARD 38
11.4 Test Result 38
13. TEST SETUP PHOTO 40
14. EUT CONSTRUCTIONAL DETAILS 40

1. VERSION

Report No.	Version	Description	Approved
ZKT-241113L15319E-3	Rev.01	Initial issue of report	Oct. 31, 2024

2. TEST SUMMARY

Test procedures according to the technical standards:

FCC Part15 (15.247) , Subpart C			
Standard Section	Test Item	Result	Remark
15.203	Antenna Requirement	PASS	
15.207	AC Power Line Conducted Emission	PASS	
15.247 (b)(1)	Conducted Peak Output Power	PASS	
15.247 (a)(1)	20 dBBandwidth & 99% Occupied Bandwidth	PASS	
15.247 (a)(1)	Carrier Frequencies Separation	PASS	
15.247 (a)(1)(iii)	Hopping Channel Number	PASS	
15.247 (a)(1)(iii)	Dwell Time	PASS	
15.205/15.209	Radiated Emission and Restricted Band	PASS	
15.247(d)	Conducted Unwanted emissions and Band Edge	PASS	

NOTE:

(1)" N/A" denotes test is not applicable in this Test Report

2.1 TEST FACILITY

Shenzhen ZKT Technology Co., Ltd.
Add. : 1/F, No. 101, Building B, No. 6, Tangwei Community Industrial Avenue, Fuhai Street, Bao'an District, Shenzhen, China

FCC Test Firm Registration Number: 692225
Designation Number: CN1299
IC Registered No.: 27033
CAB identifier: CN0110
Designation Number: CN0110

2.2 MEASUREMENT UNCERTAINTY

The reported uncertainty of measurement y ± U，where expended uncertainty U is based on a standard uncertainty multiplied by a coverage factor of k=2，providing a level of confidence of approximately 95 %。

No.	Item	Uncertainty
1	3m camber Radiated spurious emission(9KHz-30MHz)	U=4.5dB
2	3m camber Radiated spurious emission(30MHz-1GHz)	U=4.8dB
3	3m chamber Radiated spurious emission(1GHz-6GHz)	U=4.9dB
4	3m chamber Radiated spurious emission(6GHz-40GHz)	U=5.0dB
5	Conducted disturbance	U=3.2dB
6	RF Band Edge	U=1.68dB
7	RF power conducted	U=1.86dB
8	RF conducted Spurious Emission	U=2.2dB
9	RF Occupied Bandwidth	U=1.8MHz
10	humidity uncertainty	U=5.3%
11	Temperature uncertainty	U=0.59℃

3. GENERAL INFORMATION

3.1 GENERAL DESCRIPTION OF EUT

Product Name:	Projector
Model No.:	G4,G1,G2,G3,G5,G6,G7,G8,G9,G10,H1,X1,X2,X3,X6,X8,X9,A1,A2,A3,A6,A9,Q1,Q2,Q3,Q6,Q9,S1,S2,S3,S6,S9,HY300,G11,G12,G13,G14,G15,G16,G17,G18,G19,G20,HY300 Pro,S1 Pro
Model Different.:	The differences between multiple models only include differences in model naming, color, appearance, without any differences in product functionality.The differences do not affect this testing project.
Test sample(s) ID:	ZKT-241113L15319
Sample(s) Status:	Engineer sample
Hardware Version:	V1.0
Software Version:	V1.0
Channel numbers:	79
Channel separation:	2402MHz~2480MHz
Modulation technology:	GFSK, π/4-DQPSK, 8DPSK
Antenna Type:	Ceramic antenna
Antenna gain:	2.55dBi
Power supply:	INPUT:100-220V~50/60Hz 2.0A Max OUTPUT:27.0V⎓ 1.1A, 29.7W

Operation Frequency each of channel							
Channel	Frequency	Channel	Frequency	Channel	Frequency	Channel	Frequency
0	2402MHz	20	2422MHz	40	2442MHz	60	2462MHz
1	2403MHz	21	2423MHz	41	2443MHz	61	2463MHz
2	2404MHz	22	2424MHz	42	2444MHz	62	2464MHz
3	2405MHz	23	2425MHz	43	2445MHz	63	2465MHz
4	2406MHz	24	2426MHz	44	2446MHz	64	2466MHz
5	2407MHz	25	2427MHz	45	2447MHz	65	2467MHz
6	2408MHz	26	2428MHz	46	2448MHz	66	2468MHz
7	2409MHz	27	2429MHz	47	2449MHz	67	2469MHz
8	2410MHz	28	2430MHz	48	2450MHz	68	2470MHz
9	2411MHz	29	2431MHz	49	2451MHz	69	2471MHz
10	2412MHz	30	2432MHz	50	2452MHz	70	2472MHz
11	2413MHz	31	2433MHz	51	2453MHz	71	2473MHz
12	2414MHz	32	2434MHz	52	2454MHz	72	2474MHz
13	2415MHz	33	2435MHz	53	2455MHz	73	2475MHz
14	2416MHz	34	2436MHz	54	2456MHz	74	2476MHz
15	2417MHz	35	2437MHz	55	2457MHz	75	2477MHz
16	2418MHz	36	2438MHz	56	2458MHz	76	2478MHz
17	2419MHz	37	2439MHz	57	2459MHz	77	2479MHz
18	2420MHz	38	2440MHz	58	2460MHz	78	2480MHz
19	2421MHz	39	2441MHz	59	2461MHz		

Note:
In section 15.31(m), regards to the operating frequency range over 10 MHz, the Lowest frequency, the middle frequency, and the highest frequency of channel were selected to perform the test, and the selected channel see below:

Test channel	Frequency
The lowest channel	2402MHz
The middle channel	2441MHz
The Highest channel	2480MHz

3.2 Test Setup Configuration

Conducted Emission

E-1&EUT

Radiated Emission

E-1&EUT

Conducted Spurious

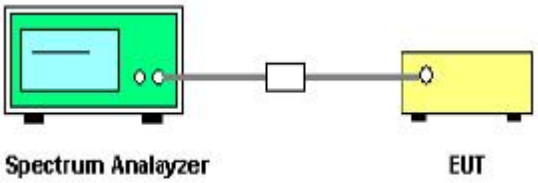

3.3 Support Equipment

The EUT has been tested as an independent unit together with other necessary accessories or support units. The following support units or accessories were used to form a representative test configuration during the tests.

Item	Equipment	Mfr/Brand	Model/Type No.	Series No.	Note
E-1	Projector	OLYMMONS	G4	N/A	EUT

Item	Shielded Type	Ferrite Core	Length	Note

Note:
(1) The support equipment was authorized by Declaration of Confirmation.
(2) For detachable type I/O cable should be specified the length in cm in『Length』column.
(3) “YES” is means “shielded” “with core”; “NO” is means “unshielded” “without core”.

3.4 Test Mode

Transmitting mode	Keep the EUT in continuously transmitting mode.
Remark: During the test, the test voltage was tuned from 85% to 115% of the nominal rated supply voltage, and found that the worst case was under the nominal rated supply condition. So the report just shows that condition's data.	

Test Software	BT Test Tool
Power level setup	Default

3.5 EQUIPMENTS LIST FOR ALL TEST ITEMS

Radiation Test equipment

Item	Equipment	Manufacturer	Type No.	Serial No.	Firmware Version	Last calibration	Calibrated until
1	Spectrum Analyzer (9kHz-26.5GHz)	KEYSIGHT	9020A	MY55370835	A.17.05	Nov. 02, 2023	Nov. 01, 2024
2	Spectrum Analyzer (10kHz-39.9GHz)	R&S	FSV40-N	100363	1.71 SP2	Nov. 02, 2023	Nov. 01, 2024
3	EMI Test Receiver (9kHz-7GHz)	R&S	ESCI7	100969	4.32	Nov. 02, 2023	Nov. 01, 2024
4	Bilog Antenna (30MHz-1500MHz)	Schwarzbeck	VULB9168	N/A	N/A	Nov. 13, 2023	Nov. 12, 2024
5	Horn Antenna (1GHz-18GHz)	Agilent	AH-118	071145	N/A	Nov. 13, 2023	Nov. 12, 2024
6	Horn Antenna (15GHz-40GHz)	A.H.System	SAS-574	588	N/A	Nov. 13, 2023	Nov. 12, 2024
7	Loop Antenna	TESEQ	HLA6121	58357	N/A	Nov. 16, 2023	Nov. 15, 2024
8	Amplifier (30-1000MHz)	EM Electronics	EM330 Amplifier	60747	N/A	Nov. 02, 2023	Nov. 01, 2024
9	Amplifier (1GHz-26.5GHz)	HuiPu	8449B	3008A00315	N/A	Nov. 02, 2023	Nov. 01, 2024
10	Amplifier (500MHz-40GHz)	QuanJuDa	DLE-161	097	N/A	Nov. 02, 2023	Nov. 01, 2024
11	Test Cable	N/A	R-01	N/A	N/A	Nov. 02, 2023	Nov. 01, 2024
12	Test Cable	N/A	R-02	N/A	N/A	Nov. 02, 2023	Nov. 01, 2024
13	Test Cable	N/A	R-03	N/A	N/A	Nov. 02, 2023	Nov. 01, 2024
14	Test Cable	N/A	RF-01	N/A	N/A	Nov. 02, 2023	Nov. 01, 2024
15	Test Cable	N/A	RF-02	N/A	N/A	Nov. 02, 2023	Nov. 01, 2024
16	Test Cable	N/A	RF-03	N/A	N/A	Nov. 02, 2023	Nov. 01, 2024
17	ESG Signal Generator	Agilent	E4421B	N/A	B.03.84	Nov. 02, 2023	Nov. 01, 2024
18	Signal Generator	Agilent	N5182A	N/A	A.01.87	Nov. 02, 2023	Nov. 01, 2024
19	Magnetic Field Probe Tester	Narda	ELT-400	0-0344	N/A	Nov. 16, 2023	Nov. 15, 2024
20	Wideband Radio Communication Test	R&S	CMW500	106504	V 3.7.22	Nov. 02, 2023	Nov. 01, 2024
21	MWRF Power Meter Test system	MW	MW100-RF CB	N/A	N/A	Nov. 02, 2023	Nov. 01, 2024
22	D.C. Power Supply	LongWei	TPR-6405D	N/A	N/A	\	\
23	EMC Software	Frad	EZ-EMC	Ver.EMC-CO N 3A1.1	N/A	\	\
24	RF Software	MW	MTS8310	V2.0.0.0	N/A	\	\
25	Turntable	MF	MF-7802BS	N/A	N/A	\	\
26	Antenna tower	MF	MF-7802BS	N/A	N/A	\	\

Conduction Test equipment

Item	Kind of Equipment	Manufacturer	Type No.	Serial No.	Firmware Version	Last calibration	Calibrated until
1	LISN	R&S	ENV216	101471	N/A	Nov. 14, 2023	Nov. 13, 2024
2	LISN	CYBERTEK	EM5040A	E1850400149	N/A	Nov. 02, 2023	Nov. 01, 2024
3	Test Cable	N/A	C-01	N/A	N/A	Nov. 02, 2023	Nov. 01, 2024
4	Test Cable	N/A	C-02	N/A	N/A	Nov. 02, 2023	Nov. 01, 2024
5	Test Cable	N/A	C-03	N/A	N/A	Nov. 02, 2023	Nov. 01, 2024
6	EMI Test Receiver	R&S	ESCI3	101393	4.42 SP3	Nov. 02, 2023	Nov. 01, 2024
7	Triple-Loop Antenna	N/A	RF300	N/A	N/A	Nov. 02, 2023	Nov. 01, 2024
8	Absorbing Clamp	DZ	ZN23201	15034	N/A	Nov. 07, 2023	Nov. 06, 2024
9	EMC Software	Frad	EZ-EMC	Ver.EMC-CON 3A1.1	N/A	\	\

4. EMC EMISSION TEST

4.1 Conducted emissions

Test Requirement:	FCC Part15 C Section 15.207
Test Method:	ANSI C63.10:2013
Test Frequency Range:	150KHz to 30MHz
Receiver setup:	RBW=9KHz, VBW=30KHz, Sweep time=auto

4.1.1 POWER LINE CONDUCTED EMISSION Limits

FREQUENCY (MHz)	Limit (dBuV)		Standard
	Quasi-peak	Average	
0.15 -0.5	66 - 56 *	56 - 46 *	FCC
0.50 -5.0	56.00	46.00	FCC
5.0 -30.0	60.00	50.00	FCC

Note:

(1) *Decreases with the logarithm of the frequency.

4.1.2 TEST PROCEDURE

a. The EUT was placed 0.1 meters from the horizontal ground plane with EUT being connected to the power mains through a line impedance stabilization network (LISN). All other support equipments powered from additional LISN(s). The LISN provide 50 Ohm/ 50uH of coupling impedance for the measuring instrument.
b. Interconnecting cables that hang closer than 40 cm to the ground plane shall be folded back and forth in the center forming a bundle 30 to 40 cm long.
c. I/O cables that are not connected to a peripheral shall be bundled in the center. The end of the cable may be terminated, if required, using the correct terminating impedance. The overall length shall not exceed 1 m.
d. LISN at least 80 cm from nearest part of EUT chassis.
e. For the actual test configuration, please refer to the related Item –EUT Test Photos.

4.1.3 DEVIATION FROM TEST STANDARD

No deviation

4.1.4 TEST SETUP

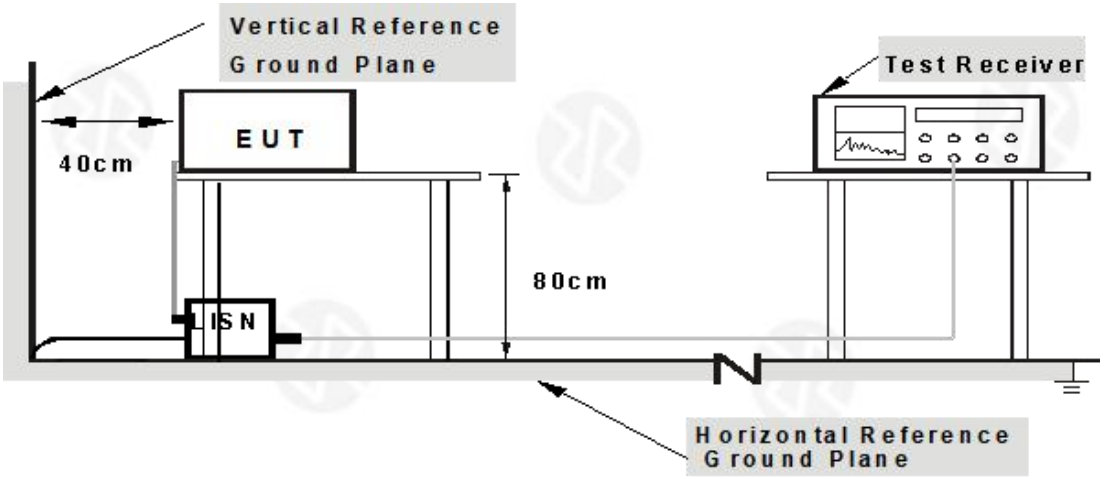

Note: 1.Support units were connected to second LISN.
2.Both of LISNs (AMN) are 80 cm from EUT and at least 80 from other units and other metal planes

4.1.5 EUT OPERATING CONDITIONS

The EUT was configured for testing in a typical fashion (as a customer would normally use it). The EUT has been programmed to continuously transmit during test. This operating condition was tested and used to collect the included data.

4.1.6 Test Result

Temperature:	26℃	Relative Humidity:	54%
Pressure:	101kPa	Phase :	L
Test Voltage :	AC 120V/60Hz	Test Mode :	TX GFSK-2402MHz

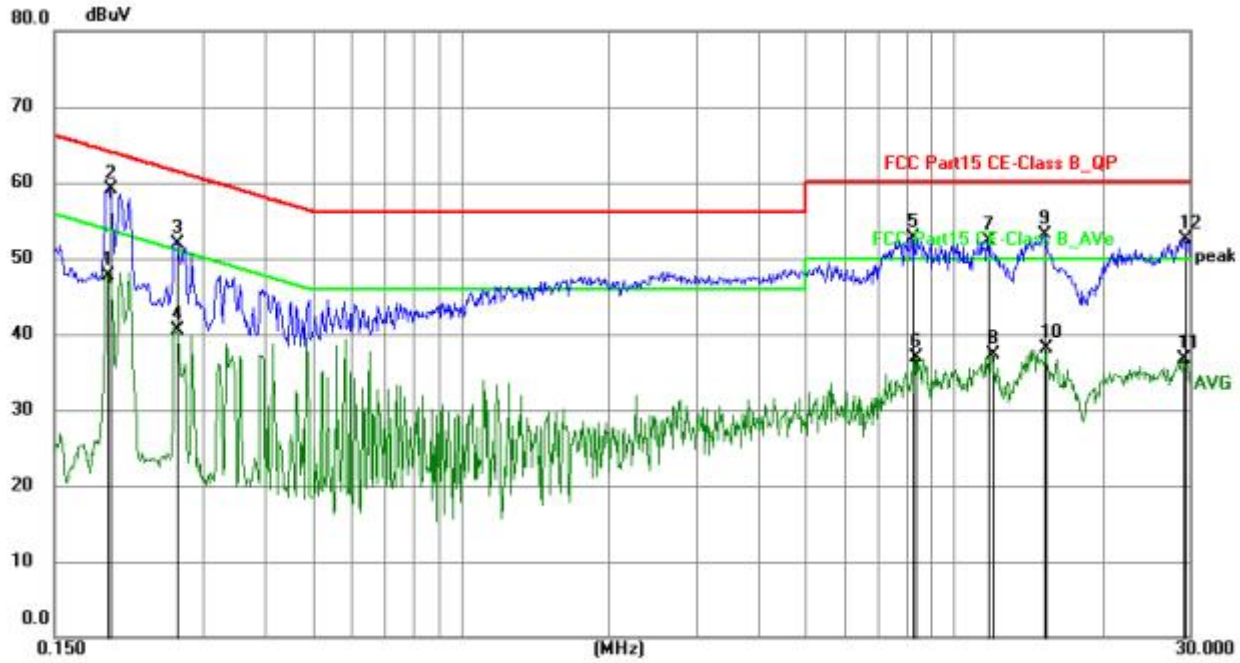

No.	Frequency (MHz)	Reading (dBuV)	Factor (dB)	Level (dBuV)	Limit (dBuV)	Margin (dB)	Detector	P/F
1	0.1922	27.55	20.35	47.90	53.94	-6.04	AVG	P
2	0.1949	39.32	20.36	59.68	63.83	-4.15	QP	P
3	0.2670	31.79	20.35	52.14	61.21	-9.07	QP	P
4	0.2670	20.29	20.35	40.64	51.21	-10.57	AVG	P
5	8.2004	32.17	20.41	52.58	60.00	-7.42	QP	P
6	8.3445	16.11	20.42	36.53	50.00	-13.47	AVG	P
7	11.6879	31.96	20.47	52.43	60.00	-7.57	QP	P
8	11.9489	17.00	20.47	37.47	50.00	-12.53	AVG	P
9	15.2654	33.09	20.49	53.58	60.00	-6.42	QP	P
10	15.3552	17.98	20.49	38.47	50.00	-11.53	AVG	P
11	29.1705	15.85	20.73	36.58	50.00	-13.42	AVG	P
12	29.2424	31.68	20.73	52.48	60.00	-7.52	QP	P

Notes:
1.An initial pre-scan was performed on the line and neutral lines with peak detector.
2.Quasi-Peak and Average measurement were performed at the frequencies with maximized peak emission.
3.Mesurement Level = Reading level + Correct Factor
4.The test data shows only the worst case GFSK-2402MHz.

Temperature:	26℃	Relative Humidity:	54%
Pressure:	101kPa	Phase :	N
Test Voltage :	AC 120V/60Hz	Test Mode :	TX GFSK-2402MHz

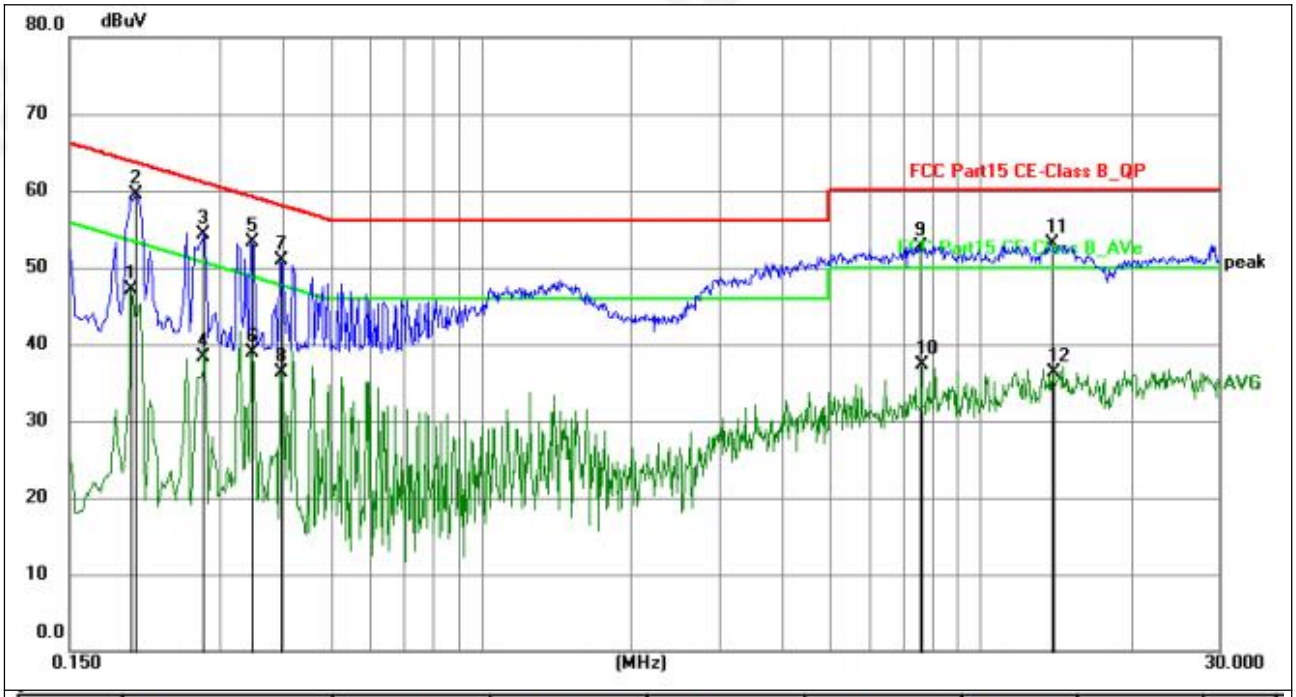

No.	Frequency (MHz)	Reading (dBuV)	Factor (dB)	Level (dBuV)	Limit (dBuV)	Margin (dB)	Detector	P/F
1	0.1995	27.03	20.37	47.40	53.63	-6.23	AVG	P
2	0.2038	38.48	20.37	58.82	63.45	-4.63	QP	P
3	0.2787	34.08	20.35	54.43	60.85	-6.42	QP	P
4	0.2787	18.23	20.35	38.58	50.85	-12.27	AVG	P
5	0.3478	33.23	20.34	53.57	59.01	-5.44	QP	P
6	0.3478	18.41	20.34	38.75	49.01	-10.26	AVG	P
7	0.3975	30.32	20.32	50.64	57.91	-7.15	QP	P
8	0.3975	16.08	20.32	36.40	47.91	-11.51	AVG	P
9	7.5525	31.97	20.41	52.38	60.00	-7.62	QP	P
10	7.6245	17.32	20.42	37.64	50.00	-12.36	AVG	P
11	13.8435	32.93	20.50	53.43	60.00	-6.57	QP	P
12	13.9335	15.96	20.50	36.46	50.00	-13.54	AVG	P

Notes:
1.An initial pre-scan was performed on the line and neutral lines with peak detector.
2.Quasi-Peak and Average measurement were performed at the frequencies with maximized peak emission.
3.Mesurement Level = Reading level + Correct Factor
4.The test data shows only the worst case GFSK-2402MHz.

4.2 Radiated emissions

Test Requirement:	FCC Part15 C Section 15.209
Test Method:	ANSI C63.10:2013
Test Frequency Range:	9kHz to 25GHz
Test site:	Measurement Distance: 3m
Receiver setup:	

Frequency	Detector	RBW	VBW	Value
9KHz-150KHz	Quasi-peak	200Hz	600Hz	Quasi-peak
150KHz-30MHz	Quasi-peak	9KHz	30KHz	Quasi-peak
30MHz-1GHz	Quasi-peak	100KHz	300KHz	Quasi-peak
Above 1GHz	Peak	1MHz	3MHz	Peak
	Peak	1MHz	10Hz	Average

4.2.1 Radiated Emission Limits

Frequencies (MHz)	Field Strength (micorvolts/meter)	Measurement Distance (meters)
0.009~0.490	2400/F(KHz)	300
0.490~1.705	24000/F(KHz)	30
1.705~30.0	30	30
30~88	100	3
88~216	150	3
216~960	200	3
Above 960	500	3

LIMITS OF RADIATED EMISSION MEASUREMENT

FREQUENCY (MHz)	Limit (dBuV/m) (at 3M)	
	PEAK	AVERAGE
Above 1000	74	54

Notes:

(1) The limit for radiated test was performed according to FCC PART 15C.

(2) The tighter limit applies at the band edges.

(3) Emission level (dBuV/m)=20log Emission level (uV/m).

4.2.2 TEST PROCEDURE

Below 1GHz test procedure as below:

a. The EUT was placed on the top of a rotating table 0.8 meters above the ground at a 3 meter semi-anechoic camber. The table was rotated 360 degrees to determine the position of the highest radiation.

b. The EUT was set 3 meters away from the interference-receiving antenna, which was mounted on the top of a variable-height antenna tower.

c. The antenna height is varied from one meter to four meters above the ground to determine the maximum value of the field strength. Both horizontal and vertical polarizations of the antenna are set to make the measurement.

d. For each suspected emission, the EUT was arranged to its worst case and then the antenna was tuned to heights from 1 meter to 4 meters (for the test frequency of below 30MHz, the antenna was tuned to heights 1 meter) and the rotatable table was turned from 0 degrees to 360 degrees to find the maximum reading.
e. The test-receiver system was set to Peak Detect Function and Specified Bandwidth with Maximum Hold Mode.
f. If the emission level of the EUT in peak mode was 10dB lower than the limit specified, then testing could be stopped and the peak values of the EUT would be reported. Otherwise the emissions that did not have 10dB margin would be re-tested one by one using peak, quasi-peak or average method as specified and then reported in a data sheet.

Above 1GHz test procedure as below:

g. Different between above is the test site, change from Semi- Anechoic Chamber to fully Anechoic Chamber and change form table 0.8 metre to 1.5 metre(Above 18GHz the distance is 1 meter and table is 1.5 metre).
h. Test the EUT in the lowest channel ,the middle channel ,the Highest channel

Note:

Both horizontal and vertical antenna polarities were tested
and performed pretest to three orthogonal axis. The worst case emissions were reported

4.2.3 DEVIATION FROM TEST STANDARD

No deviation

4.2.4 TEST SETUP

（A）Radiated Emission Test-Up Frequency Below 30MHz

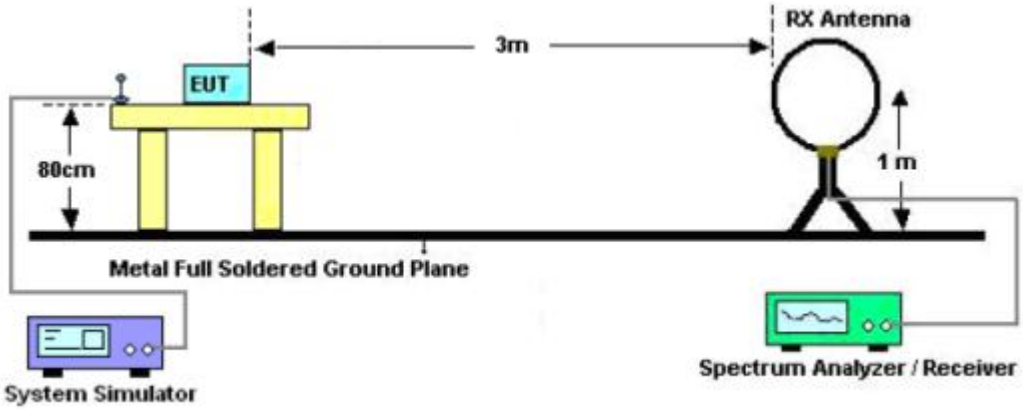

（B）Radiated Emission Test-Up Frequency 30MHz~1GHz

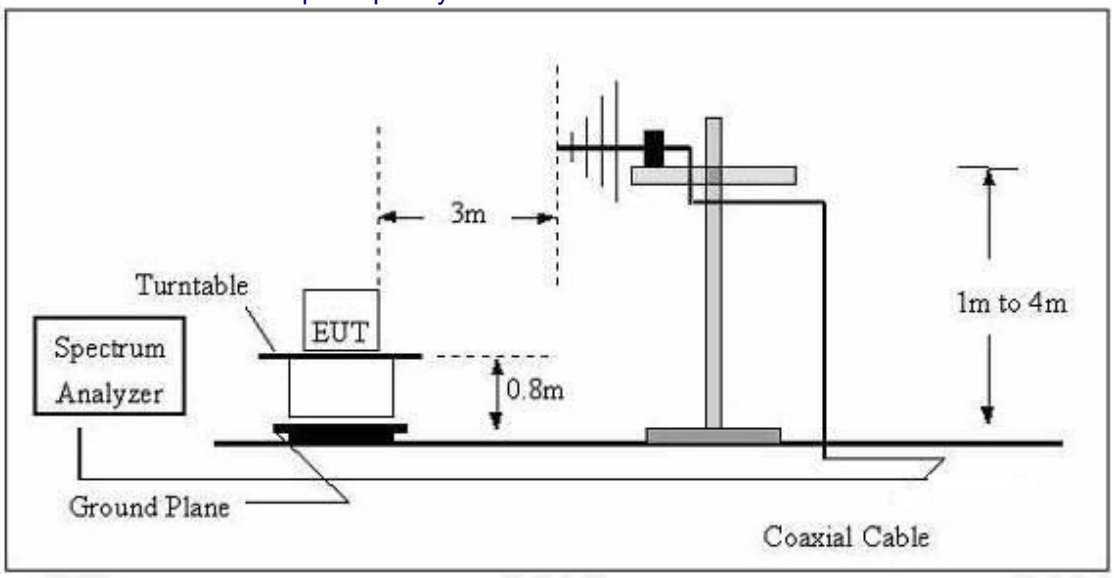

（C）Radiated Emission Test-Up Frequency Above 1GHz

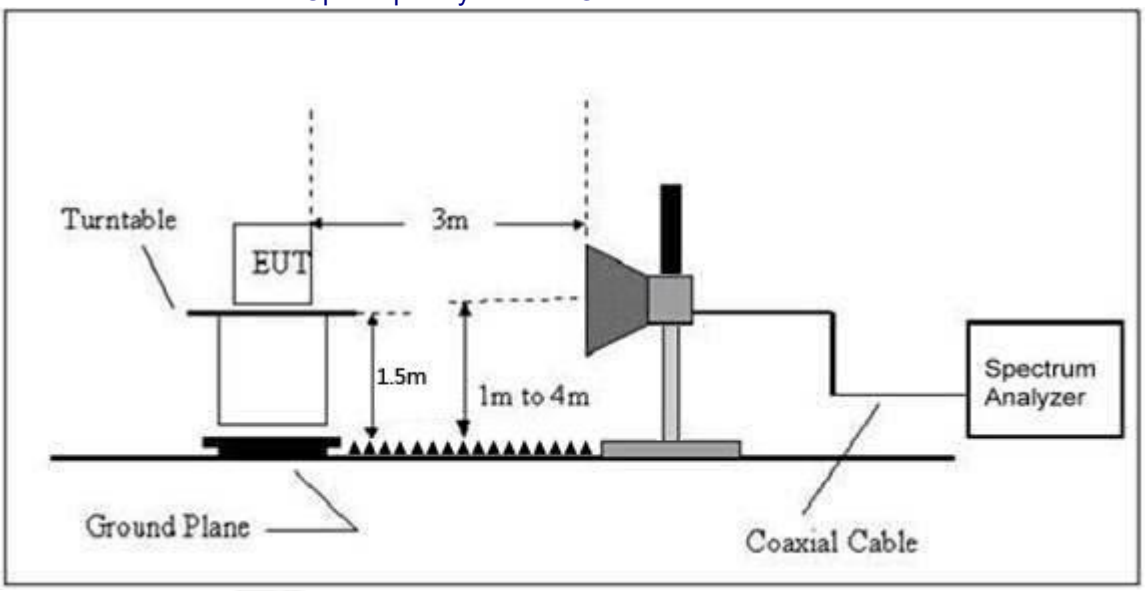

4.2.5 EUT OPERATING CONDITIONS

The EUT tested system was configured as the statements of 2.4 Unless otherwise a special operating condition is specified in the follows during the testing.

4.2.6 TEST RESULTS

Between 9KHz – 30MHz

The emission from 9 kHz to 30MHz was pre-tested and found the result was 20dB lower than the limit, and according to 15.31(o) & RSS-Gen 6.13, the test result no need to reported.

Between 30MHz – 1GHz

Temperature:	26℃	Relative Humidity:	54%
Pressure:	101 kPa	Polarization:	Horizontal
Test Voltage:	AC 120V/60Hz		

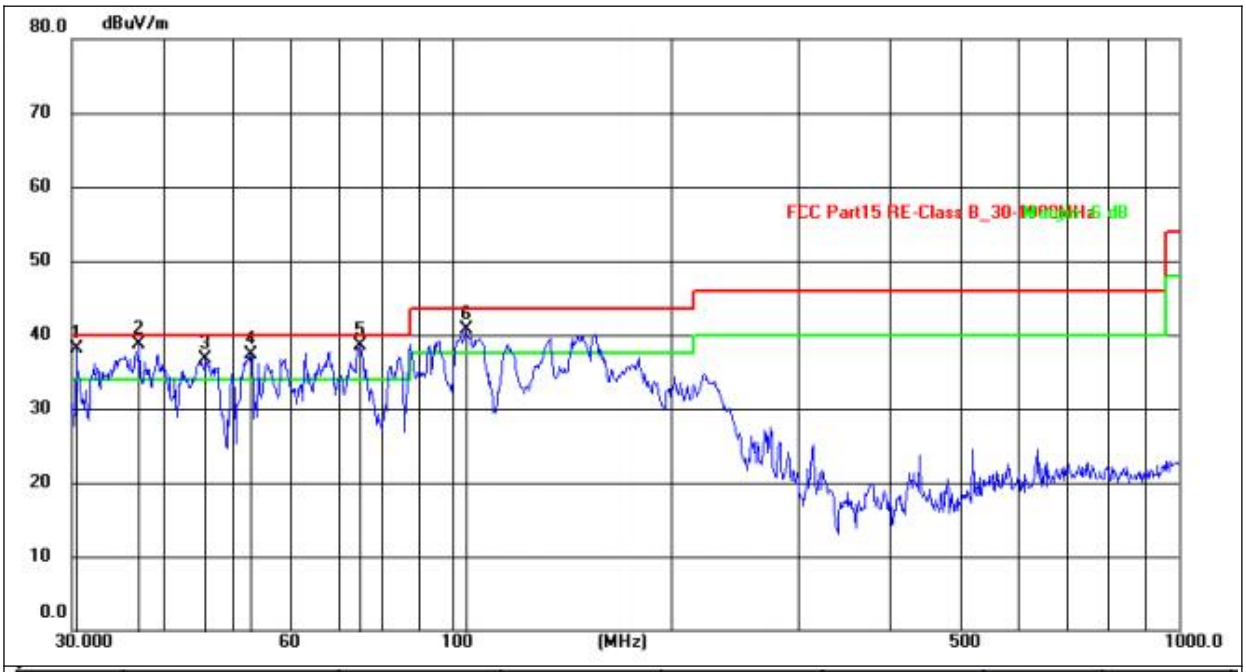

No.	Frequency (MHz)	Reading (dBuV)	Factor (dB/m)	Level (dBuV/m)	Limit (dBuV/m)	Margin (dB)	Detector
1	30.4237	50.81	-14.28	36.53	40.00	-3.47	QP
2	37.1548	51.20	-14.66	36.54	40.00	-3.46	QP
3	45.8551	48.77	-14.08	34.69	40.00	-5.31	QP
4	52.9453	49.94	-14.10	35.84	40.00	-4.16	QP
5	74.9191	55.08	-18.16	36.92	40.00	-3.08	QP
6	104.5360	58.89	-19.54	39.35	43.50	-4.15	QP

Temperature:	26℃	Relative Humidity:	54%
Pressure:	101kPa	Polarization:	Vertical
Test Voltage:	AC 120V/60Hz		

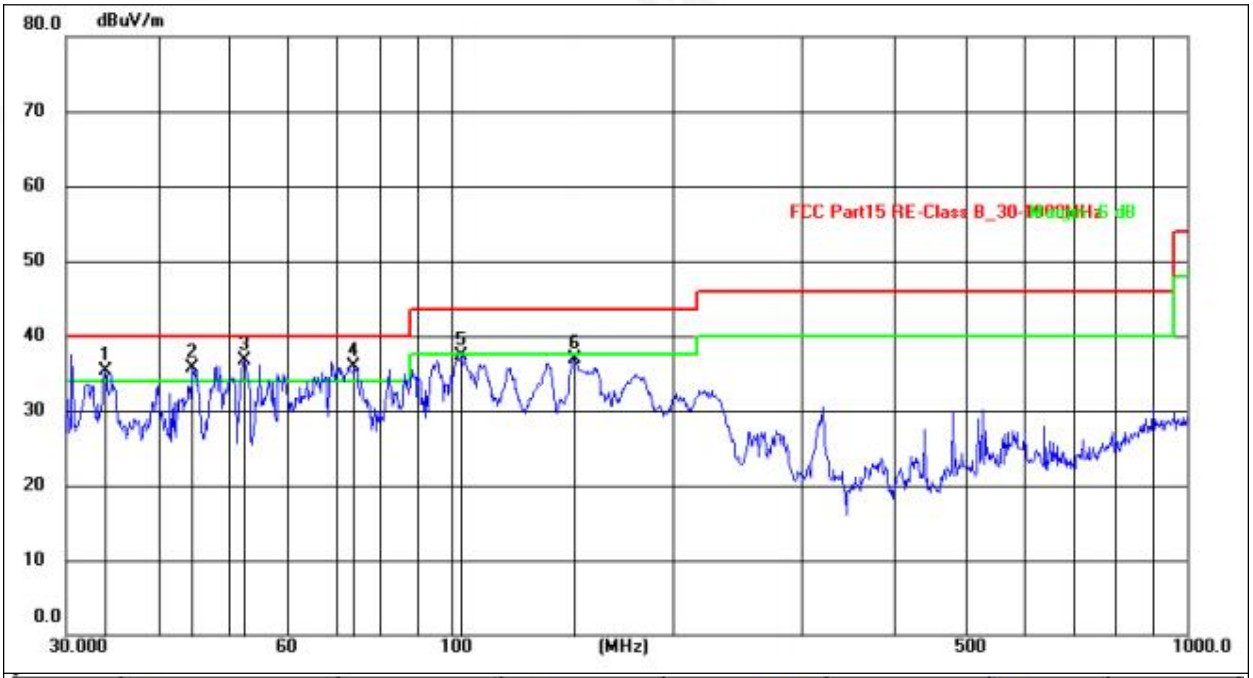

No.	Frequency (MHz)	Reading (dBuV)	Factor (dB/m)	Level (dBuV/m)	Limit (dBuV/m)	Margin (dB)	Detector
1	33.9172	53.57	-17.79	35.78	40.00	-4.28	QP
2	44.5867	52.87	-17.06	35.81	40.00	-4.19	QP
3	52.3911	54.35	-17.53	36.82	40.00	-3.18	QP
4	73.8756	56.27	-20.33	35.94	40.00	-4.06	QP
5	103.0800	58.50	-21.25	37.25	43.50	-6.25	QP
6	147.4036	57.68	-20.65	37.03	43.50	-6.47	QP

Notes:

1. The EUT was test at 3m in field chamber.
2. Final Level =Receiver Read level +Antenna Factor
3. The emission levels of other frequencies are very lower than the limit and not show in test report.

1GHz~25GHz

Polar (H/V)	Frequency (MHz)	Meter Reading (dBuV)	Pre-amplifier (dB)	Cable Loss (dB)	Antenna Factor (dB)	Emission Level (dBuV/m)	Limits (dBuV/m)	Margin (dB)	Detector Type
Low Channel:2402MHz									
V	4804.00	54.57	30.55	5.77	24.66	54.45	74.00	-19.55	Pk
V	4804.00	44.92	30.55	5.77	24.66	44.8	54.00	-9.2	AV
V	7206.00	53.98	30.33	6.32	24.55	54.52	74.00	-19.48	Pk
V	7206.00	45.44	30.33	6.32	24.55	45.98	54.00	-8.02	AV
V	9608.00	52.89	30.85	7.45	24.69	54.18	74.00	-19.82	Pk
V	9608.00	44.7	30.85	7.45	24.69	45.99	54.00	-8.01	AV
V	12010.00	56.4	31.02	8.99	25.57	59.94	74.00	-14.06	Pk
V	12010.00	45.15	31.02	8.99	25.57	48.69	54.00	-5.31	AV
H	4804.00	53.16	30.55	5.77	24.66	53.04	74.00	-20.96	Pk
H	4804.00	45.61	30.55	5.77	24.66	45.49	54.00	-8.51	AV
H	7206.00	54.84	30.33	6.32	24.55	55.38	74.00	-18.62	Pk
H	7206.00	45.31	30.33	6.32	24.55	45.85	54.00	-8.15	AV
H	9608.00	53.43	30.85	7.45	24.69	54.72	74.00	-19.28	Pk
H	9608.00	45.63	30.85	7.45	24.69	46.92	54.00	-7.08	AV
H	12010.00	55.15	31.02	8.99	25.57	58.69	74.00	-15.31	Pk
H	12010.00	44.75	31.02	8.99	25.57	48.29	54.00	-5.71	AV

Polar (H/V)	Frequency (MHz)	Meter Reading (dBuV)	Pre-amplifier (dB)	Cable Loss (dB)	Antenna Factor (dB)	Emission Level (dBuV/m)	Limits (dBuV/m)	Margin (dB)	Detector Type
Middle Channel:2441MHz									
V	4882.00	55.13	30.55	5.77	24.66	55.01	74.00	-18.99	Pk
V	4882.00	45.63	30.55	5.77	24.66	45.51	54.00	-8.49	AV
V	7323.00	55.03	30.33	6.32	24.55	55.57	74.00	-18.43	Pk
V	7323.00	45.2	30.33	6.32	24.55	45.74	54.00	-8.26	AV
V	9764.00	53.84	30.85	7.45	24.69	55.13	74.00	-18.87	Pk
V	9764.00	45.12	30.85	7.45	24.69	46.41	54.00	-7.59	AV
V	12205.00	53.35	31.02	8.99	25.57	56.89	74.00	-17.11	Pk
V	12205.00	45.26	31.02	8.99	25.57	48.8	54.00	-5.2	AV
H	4882.00	55.52	30.55	5.77	24.66	55.4	74.00	-18.6	Pk
H	4882.00	45.4	30.55	5.77	24.66	45.28	54.00	-8.72	AV
H	7323.00	55.9	30.33	6.32	24.55	56.44	74.00	-17.56	Pk
H	7323.00	44.79	30.33	6.32	24.55	45.33	54.00	-8.67	AV
H	9764.00	52.6	30.85	7.45	24.69	53.89	74.00	-20.11	Pk
H	9764.00	45.61	30.85	7.45	24.69	46.9	54.00	-7.1	AV
H	12205.00	51.99	31.02	8.99	25.57	55.53	74.00	-18.47	Pk
H	12205.00	45.64	31.02	8.99	25.57	49.18	54.00	-4.82	AV

Polar (H/V)	Frequency (MHz)	Meter Reading (dBuV)	Pre-amplifier (dB)	Cable Loss (dB)	Antenna Factor (dB)	Emission Level (dBuV/m)	Limits (dBuV/m)	Margin (dB)	Detector Type
High Channel:2480MHz									
V	4960.00	55.37	30.55	5.77	24.66	55.25	74.00	-18.75	Pk
V	4960.00	45.65	30.55	5.77	24.66	45.53	54.00	-8.47	AV
V	7440.00	54.54	30.33	6.32	24.55	55.08	74.00	-18.92	Pk
V	7440.00	44.69	30.33	6.32	24.55	45.23	54.00	-8.77	AV
V	9920.00	52.42	30.85	7.45	24.69	53.71	74.00	-20.29	Pk
V	9920.00	45.31	30.85	7.45	24.69	46.6	54.00	-7.4	AV
V	12400.00	53.17	31.02	8.99	25.57	56.71	74.00	-17.29	Pk
V	12400.00	45.15	31.02	8.99	25.57	48.69	54.00	-5.31	AV
H	4960.00	53.5	30.55	5.77	24.66	53.38	74.00	-20.62	Pk
H	4960.00	44.91	30.55	5.77	24.66	44.79	54.00	-9.21	AV
H	7440.00	53.23	30.33	6.32	24.55	53.77	74.00	-20.23	Pk
H	7440.00	45.14	30.33	6.32	24.55	45.68	54.00	-8.32	AV
H	9920.00	53.77	30.85	7.45	24.69	55.06	74.00	-18.94	Pk
H	9920.00	45.36	30.85	7.45	24.69	46.65	54.00	-7.35	AV
H	12400.00	56.31	31.02	8.99	25.57	59.85	74.00	-14.15	Pk
H	12400.00	44.98	31.02	8.99	25.57	48.52	54.00	-5.48	AV

Remark:
1. Emission Level = Meter Reading + Antenna Factor + Cable Loss – Pre-amplifier,
   Margin= Emission Level - Limit
2. If peak below the average limit, the average emission was no test.
3. The amplitude of spurious emissions which are attenuated by more than 20dB below the permissible value has no need to be reported.

π/4-DQPSK

Polar (H/V)	Frequency (MHz)	Meter Reading (dBuV)	Pre-amplifier (dB)	Cable Loss (dB)	Antenna Factor (dB)	Emission Level (dBuV/m)	Limits (dBuV/m)	Margin (dB)	Detector Type
Low Channel:2402MHz									
V	4804.00	53.49	30.55	5.77	24.66	53.37	74.00	-20.63	Pk
V	4804.00	45.06	30.55	5.77	24.66	44.94	54.00	-9.06	AV
V	7206.00	53.64	30.33	6.32	24.55	54.18	74.00	-19.82	Pk
V	7206.00	45.51	30.33	6.32	24.55	46.05	54.00	-7.95	AV
V	9608.00	55.17	30.85	7.45	24.69	56.46	74.00	-17.54	Pk
V	9608.00	44.87	30.85	7.45	24.69	46.16	54.00	-7.84	AV
V	12010.00	54.56	31.02	8.99	25.57	58.1	74.00	-15.9	Pk
V	12010.00	45.13	31.02	8.99	25.57	48.67	54.00	-5.33	AV
H	4804.00	56.23	30.55	5.77	24.66	56.11	74.00	-17.89	Pk
H	4804.00	45.52	30.55	5.77	24.66	45.4	54.00	-8.6	AV
H	7206.00	56.25	30.33	6.32	24.55	56.79	74.00	-17.21	Pk
H	7206.00	45.05	30.33	6.32	24.55	45.59	54.00	-8.41	AV
H	9608.00	54.78	30.85	7.45	24.69	56.07	74.00	-17.93	Pk
H	9608.00	45.31	30.85	7.45	24.69	46.6	54.00	-7.4	AV
H	12010.00	55.02	31.02	8.99	25.57	58.56	74.00	-15.44	Pk
H	12010.00	45.68	31.02	8.99	25.57	49.22	54.00	-4.78	AV

Polar (H/V)	Frequency (MHz)	Meter Reading (dBuV)	Pre-amplifier (dB)	Cable Loss (dB)	Antenna Factor (dB)	Emission Level (dBuV/m)	Limits (dBuV/m)	Margin (dB)	Detector Type
Middle Channel:2441MHz									
V	4882.00	52.75	30.55	5.77	24.66	52.63	74.00	-21.37	Pk
V	4882.00	45.44	30.55	5.77	24.66	45.32	54.00	-8.68	AV
V	7323.00	54.7	30.33	6.32	24.55	55.24	74.00	-18.76	Pk
V	7323.00	45.14	30.33	6.32	24.55	45.68	54.00	-8.32	AV
V	9764.00	56.32	30.85	7.45	24.69	57.61	74.00	-16.39	Pk
V	9764.00	45.46	30.85	7.45	24.69	46.75	54.00	-7.25	AV
V	12205.00	55.77	31.02	8.99	25.57	59.31	74.00	-14.69	Pk
V	12205.00	45.64	31.02	8.99	25.57	49.18	54.00	-4.82	AV
H	4882.00	51.93	30.55	5.77	24.66	51.81	74.00	-22.19	Pk
H	4882.00	44.7	30.55	5.77	24.66	44.58	54.00	-9.42	AV
H	7323.00	53.1	30.33	6.32	24.55	53.64	74.00	-20.36	Pk
H	7323.00	45.23	30.33	6.32	24.55	45.77	54.00	-8.23	AV
H	9764.00	53.49	30.85	7.45	24.69	54.78	74.00	-19.22	Pk
H	9764.00	45.3	30.85	7.45	24.69	46.59	54.00	-7.41	AV
H	12205.00	55.48	31.02	8.99	25.57	59.02	74.00	-14.98	Pk
H	12205.00	45.08	31.02	8.99	25.57	48.62	54.00	-5.38	AV

Polar (H/V)	Frequency (MHz)	Meter Reading (dBuV)	Pre-amplifier (dB)	Cable Loss (dB)	Antenna Factor (dB)	Emission Level (dBuV/m)	Limits (dBuV/m)	Margin (dB)	Detector Type
High Channel:2480MHz									
V	4960.00	52.33	30.55	5.77	24.66	52.21	74.00	-21.79	Pk
V	4960.00	44.86	30.55	5.77	24.66	44.74	54.00	-9.26	AV
V	7440.00	52.43	30.33	6.32	24.55	52.97	74.00	-21.03	Pk
V	7440.00	44.97	30.33	6.32	24.55	45.51	54.00	-8.49	AV
V	9920.00	55.34	30.85	7.45	24.69	56.63	74.00	-17.37	Pk
V	9920.00	45.19	30.85	7.45	24.69	46.48	54.00	-7.52	AV
V	12400.00	53.33	31.02	8.99	25.57	56.87	74.00	-17.13	Pk
V	12400.00	45.11	31.02	8.99	25.57	48.65	54.00	-5.35	AV
H	4960.00	53.39	30.55	5.77	24.66	53.27	74.00	-20.73	Pk
H	4960.00	45.22	30.55	5.77	24.66	45.1	54.00	-8.9	AV
H	7440.00	56.35	30.33	6.32	24.55	56.89	74.00	-17.11	Pk
H	7440.00	44.9	30.33	6.32	24.55	45.44	54.00	-8.56	AV
H	9920.00	53.57	30.85	7.45	24.69	54.86	74.00	-19.14	Pk
H	9920.00	45.66	30.85	7.45	24.69	46.95	54.00	-7.05	AV
H	12400.00	53.63	31.02	8.99	25.57	57.17	74.00	-16.83	Pk
H	12400.00	44.92	31.02	8.99	25.57	48.46	54.00	-5.54	AV

Remark:
1. Emission Level = Meter Reading + Antenna Factor + Cable Loss – Pre-amplifier,
   Margin= Emission Level - Limit
2. If peak below the average limit, the average emission was no test.
3. The amplitude of spurious emissions which are attenuated by more than 20dB below the permissible value has no need to be reported.

8DPSK

Polar (H/V)	Frequency (MHz)	Meter Reading (dBuV)	Pre-amplifier (dB)	Cable Loss (dB)	Antenna Factor (dB)	Emission Level (dBuV/m)	Limits (dBuV/m)	Margin (dB)	Detector Type
Low Channel:2402MHz									
V	4804.00	53.49	30.55	5.77	24.66	53.37	74.00	-20.63	Pk
V	4804.00	45.06	30.55	5.77	24.66	44.94	54.00	-9.06	AV
V	7206.00	53.64	30.33	6.32	24.55	54.18	74.00	-19.82	Pk
V	7206.00	45.51	30.33	6.32	24.55	46.05	54.00	-7.95	AV
V	9608.00	55.17	30.85	7.45	24.69	56.46	74.00	-17.54	Pk
V	9608.00	44.87	30.85	7.45	24.69	46.16	54.00	-7.84	AV
V	12010.00	54.56	31.02	8.99	25.57	58.1	74.00	-15.9	Pk
V	12010.00	45.13	31.02	8.99	25.57	48.67	54.00	-5.33	AV
H	4804.00	56.23	30.55	5.77	24.66	56.11	74.00	-17.89	Pk
H	4804.00	45.52	30.55	5.77	24.66	45.4	54.00	-8.6	AV
H	7206.00	56.25	30.33	6.32	24.55	56.79	74.00	-17.21	Pk
H	7206.00	45.05	30.33	6.32	24.55	45.59	54.00	-8.41	AV
H	9608.00	54.78	30.85	7.45	24.69	56.07	74.00	-17.93	Pk
H	9608.00	45.31	30.85	7.45	24.69	46.6	54.00	-7.4	AV
H	12010.00	55.02	31.02	8.99	25.57	58.56	74.00	-15.44	Pk
H	12010.00	45.68	31.02	8.99	25.57	49.22	54.00	-4.78	AV

Polar (H/V)	Frequency (MHz)	Meter Reading (dBuV)	Pre-amplifier (dB)	Cable Loss (dB)	Antenna Factor (dB)	Emission Level (dBuV/m)	Limits (dBuV/m)	Margin (dB)	Detector Type
Middle Channel:2441MHz									
V	4882.00	52.75	30.55	5.77	24.66	52.63	74.00	-21.37	Pk
V	4882.00	45.44	30.55	5.77	24.66	45.32	54.00	-8.68	AV
V	7323.00	54.7	30.33	6.32	24.55	55.24	74.00	-18.76	Pk
V	7323.00	45.14	30.33	6.32	24.55	45.68	54.00	-8.32	AV
V	9764.00	56.32	30.85	7.45	24.69	57.61	74.00	-16.39	Pk
V	9764.00	45.46	30.85	7.45	24.69	46.75	54.00	-7.25	AV
V	12205.00	55.77	31.02	8.99	25.57	59.31	74.00	-14.69	Pk
V	12205.00	45.64	31.02	8.99	25.57	49.18	54.00	-4.82	AV
H	4882.00	51.93	30.55	5.77	24.66	51.81	74.00	-22.19	Pk
H	4882.00	44.7	30.55	5.77	24.66	44.58	54.00	-9.42	AV
H	7323.00	53.1	30.33	6.32	24.55	53.64	74.00	-20.36	Pk
H	7323.00	45.23	30.33	6.32	24.55	45.77	54.00	-8.23	AV
H	9764.00	53.49	30.85	7.45	24.69	54.78	74.00	-19.22	Pk
H	9764.00	45.3	30.85	7.45	24.69	46.59	54.00	-7.41	AV
H	12205.00	55.48	31.02	8.99	25.57	59.02	74.00	-14.98	Pk
H	12205.00	45.08	31.02	8.99	25.57	48.62	54.00	-5.38	AV

Polar (H/V)	Frequency (MHz)	Meter Reading (dBuV)	Pre-amplifier (dB)	Cable Loss (dB)	Antenna Factor (dB)	Emission Level (dBuV/m)	Limits (dBuV/m)	Margin (dB)	Detector Type
High Channel:2480MHz									
V	4960.00	52.33	30.55	5.77	24.66	52.21	74.00	-21.79	Pk
V	4960.00	44.86	30.55	5.77	24.66	44.74	54.00	-9.26	AV
V	7440.00	52.43	30.33	6.32	24.55	52.97	74.00	-21.03	Pk
V	7440.00	44.97	30.33	6.32	24.55	45.51	54.00	-8.49	AV
V	9920.00	55.34	30.85	7.45	24.69	56.63	74.00	-17.37	Pk
V	9920.00	45.19	30.85	7.45	24.69	46.48	54.00	-7.52	AV
V	12400.00	53.33	31.02	8.99	25.57	56.87	74.00	-17.13	Pk
V	12400.00	45.11	31.02	8.99	25.57	48.65	54.00	-5.35	AV
H	4960.00	53.39	30.55	5.77	24.66	53.27	74.00	-20.73	Pk
H	4960.00	45.22	30.55	5.77	24.66	45.1	54.00	-8.9	AV
H	7440.00	56.35	30.33	6.32	24.55	56.89	74.00	-17.11	Pk
H	7440.00	44.9	30.33	6.32	24.55	45.44	54.00	-8.56	AV
H	9920.00	53.57	30.85	7.45	24.69	54.86	74.00	-19.14	Pk
H	9920.00	45.66	30.85	7.45	24.69	46.95	54.00	-7.05	AV
H	12400.00	53.63	31.02	8.99	25.57	57.17	74.00	-16.83	Pk
H	12400.00	44.92	31.02	8.99	25.57	48.46	54.00	-5.54	AV

Remark:
1. Emission Level = Meter Reading + Antenna Factor + Cable Loss – Pre-amplifier,
   Margin= Emission Level - Limit
2. If peak below the average limit, the average emission was no test.
3. The amplitude of spurious emissions which are attenuated by more than 20dB below the permissible value has no need to be reported.

5. RADIATED BAND EMISSION MEASUREMENT

5.1 Test Requirement:

Test Requirement:	FCC Part15 C Section 15.209 and 15.205
Test Method:	ANSI C63.10: 2013
Test Frequency Range:	All of the restrict bands were tested, only the worst band's (2310MHz to 2500MHz) data was showed.
Test site:	Measurement Distance: 3m
Receiver setup:	

Frequency	Detector	RBW	VBW	Value
Above 1GHz	Peak	1MHz	3MHz	Peak
	Average	1MHz	3MHz	Average

LIMITS OF RADIATED EMISSION MEASUREMENT (Above 1000MHz)

FREQUENCY (MHz)	Limit (dBuV/m) (at 3M)	
	PEAK	AVERAGE
Above 1000	74	54

Notes:

(1) The limit for radiated test was performed according to FCC PART 15C.

(2) The tighter limit applies at the band edges.

(3) Emission level (dBuV/m)=20log Emission level (uV/m).

Spectrum Parameter	Setting
Attenuation	Auto
Start Frequency	2300MHz
Stop Frequency	2520
RB / VB (emission in restricted band)	1 MHz / 1 MHz for Peak, 1 MHz / 10Hz for Average

5.2 TEST PROCEDURE

Above 1GHz test procedure as below:

a. 1. The EUT was placed on the top of a rotating table 1.5 meters above the ground at a 3 meter camber. The table was rotated 360 degrees to determine the position of the highest radiation.
b. The EUT was set 3 meters away from the interference-receiving antenna, which was mounted on the top of a variable-height antenna tower.
c. The antenna height is varied from one meter to four meters above the ground to determine the maximum value of the field strength. Both horizontal and vertical polarizations of the antenna are set to make the measurement.
d. For each suspected emission, the EUT was arranged to its worst case and then the antenna was tuned to heights from 1 meter to 4 meters and the rota table was turned from 0 degrees to 360 degrees to find the maximum reading.
e. The test-receiver system was set to Peak Detect Function and Specified Bandwidth with Maximum Hold Mode.
f. If the emission level of the EUT in peak mode was 10dB lower than the limit specified, then testing could be stopped and the peak values of the EUT would be reported. Otherwise the emissions that did not have 10dB margin would be re-tested one by one using peak, quasi-peak or average method as specified and then reported in a data sheet.
g. Test the EUT in the lowest channel,the Highest channel

Note:

Both horizontal and vertical antenna polarities were tested
and performed pretest to three orthogonal axis. The worst case emissions were reported

5.3 DEVIATION FROM TEST STANDARD

No deviation

5.4 TEST SETUP

Radiated Emission Test-Up Frequency Above 1GHz

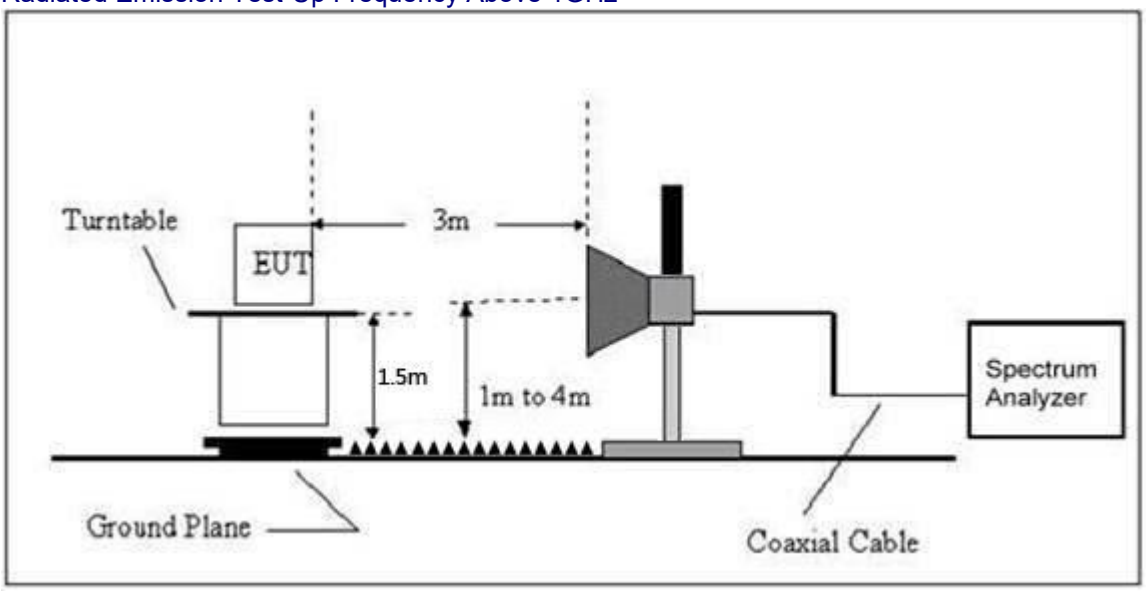

5.5 EUT OPERATING CONDITIONS

The EUT tested system was configured as the statements of 2.3 Unless otherwise a special operating condition is specified in the follows during the testing.

5.6 TEST RESULT

	Polar (H/V)	Frequency (MHz)	Meter Reading (dBuV)	Pre-amplifier (dB)	Cable Loss (dB)	Antenna Factor (dB/m)	Emission level (dBuV/m)	Limit (dBuV/m)	Detector Type	Result
GFSK	Low Channel: 2402MHz									
	H	2390.00	55.38	30.22	4.85	23.98	53.99	74.00	PK	PASS
	H	2390.00	45.78	30.22	4.85	23.98	44.39	54.00	AV	PASS
	H	2400.00	55.16	30.22	4.85	23.98	53.77	74.00	PK	PASS
	H	2400.00	46.07	30.22	4.85	23.98	44.68	54.00	AV	PASS
	V	2390.00	54.21	30.22	4.85	23.98	52.82	74.00	PK	PASS
	V	2390.00	45.85	30.22	4.85	23.98	44.46	54.00	AV	PASS
	V	2400.00	55.64	30.22	4.85	23.98	54.25	74.00	PK	PASS
	V	2400.00	45.98	30.22	4.85	23.98	44.59	54.00	AV	PASS
	High Channel: 2480MHz									
	H	2483.50	55.5	30.22	4.85	23.98	54.11	74.00	PK	PASS
	H	2483.50	45.5	30.22	4.85	23.98	44.11	54.00	AV	PASS
	H	2500.00	55.77	30.22	4.85	23.98	54.38	74.00	PK	PASS
	H	2500.00	45.34	30.22	4.85	23.98	43.95	54.00	AV	PASS
	V	2483.50	55.09	30.22	4.85	23.98	53.7	74.00	PK	PASS
	V	2483.50	45.64	30.22	4.85	23.98	44.25	54.00	AV	PASS
	V	2500.00	54.73	30.22	4.85	23.98	53.34	74.00	PK	PASS
	V	2500.00	45.93	30.22	4.85	23.98	44.54	54.00	AV	PASS
π/4-DQPSK	Low Channel: 2402MHz									
	H	2390.00	55.59	30.22	4.85	23.98	54.2	74.00	PK	PASS
	H	2390.00	45.54	30.22	4.85	23.98	44.15	54.00	AV	PASS
	H	2400.00	54.88	30.22	4.85	23.98	53.49	74.00	PK	PASS
	H	2400.00	45.18	30.22	4.85	23.98	43.79	54.00	AV	PASS
	V	2390.00	55.08	30.22	4.85	23.98	53.69	74.00	PK	PASS
	V	2390.00	45.29	30.22	4.85	23.98	43.9	54.00	AV	PASS
	V	2400.00	55.54	30.22	4.85	23.98	54.15	74.00	PK	PASS
	V	2400.00	46.03	30.22	4.85	23.98	44.64	54.00	AV	PASS
	High Channel: 2480MHz									
	H	2483.50	54.23	30.22	4.85	23.98	52.84	74.00	PK	PASS
	H	2483.50	45.56	30.22	4.85	23.98	44.17	54.00	AV	PASS
	H	2500.00	55.04	30.22	4.85	23.98	53.65	74.00	PK	PASS
	H	2500.00	45.95	30.22	4.85	23.98	44.56	54.00	AV	PASS
	V	2483.50	55.56	30.22	4.85	23.98	54.17	74.00	PK	PASS
	V	2483.50	45.33	30.22	4.85	23.98	43.94	54.00	AV	PASS
	V	2500.00	55.78	30.22	4.85	23.98	54.39	74.00	PK	PASS
	V	2500.00	45.39	30.22	4.85	23.98	44	54.00	AV	PASS

8DPSK	Low Channel: 2402MHz									
	H	2390.00	54.23	30.22	4.85	23.98	52.84	74.00	PK	PASS
	H	2390.00	45.56	30.22	4.85	23.98	44.17	54.00	AV	PASS
	H	2400.00	55.04	30.22	4.85	23.98	53.65	74.00	PK	PASS
	H	2400.00	45.95	30.22	4.85	23.98	44.56	54.00	AV	PASS
	V	2390.00	55.56	30.22	4.85	23.98	54.17	74.00	PK	PASS
	V	2390.00	45.33	30.22	4.85	23.98	43.94	54.00	AV	PASS
	V	2400.00	55.78	30.22	4.85	23.98	54.39	74.00	PK	PASS
	V	2400.00	45.39	30.22	4.85	23.98	44	54.00	AV	PASS
	High Channel: 2480MHz									
	H	2483.50	53.19	30.22	4.85	23.98	51.8	74.00	PK	PASS
	H	2483.50	44.52	30.22	4.85	23.98	43.13	54.00	AV	PASS
	H	2500.00	54	30.22	4.85	23.98	52.61	74.00	PK	PASS
	H	2500.00	44.91	30.22	4.85	23.98	43.52	54.00	AV	PASS
	V	2483.50	54.52	30.22	4.85	23.98	53.13	74.00	PK	PASS
	V	2483.50	44.29	30.22	4.85	23.98	42.9	54.00	AV	PASS
	V	2500.00	54.74	30.22	4.85	23.98	53.35	74.00	PK	PASS
	V	2500.00	44.35	30.22	4.85	23.98	42.96	54.00	AV	PASS

6. CONDUCTED BAND EDGE AND SPURIOUS EMISSION

Test Requirement:	FCC Part15 C Section 15.247 (d)
Test Method:	KDB558074 D0115.247 Meas Guidancev05r02

6.1 Limit

Regulation 15.247 (d),In any 100 kHz bandwidth outside the frequency band in which the spread spectrum or digitally modulated intentional radiator is operating, the radio frequency power that is produced by the intentional radiator shall be at least 20 dB below that in the 100 kHz bandwidth within the band that contains the highest level of the desired power, based on either an RF conducted or a radiated measurement, provided the transmitter demonstrates compliance with the peak conducted power limits. If the transmitter complies with the conducted power limits based on the use of RMS averaging over a time interval, as permitted under paragraph (b)(3) of this section, the attenuation required under this paragraph shall be 30 dB instead of 20 dB. Attenuation below the general limits specified in §15.209(a) is not required. In addition, radiated emissions which fall in the restricted bands, as defined in §15.205(a), must also comply with the radiated emission limits specified in §15.209(a) (see §15.205(c)).

6.2 Test Setup

6.3 Test procedure

Using the following spectrum analyzer setting:
A) Set the RBW = 100KHz.
B) Set the VBW = 300KHz.
C) Sweep time = auto couple.
D) Detector function = peak.
E) Trace mode = max hold.
F) Allow trace to fully stabilize.

6.4 DEVIATION FROM STANDARD

No deviation.

6.5 Test Result

Measurement Data : The detailed test data see Appendix III

7. 20DB BANDWIDTH & 99% OCCUPIED BANDWIDTH

Test Requirement:	FCC Part15 C Section 15.247 (a)(2)
Test Method:	ANSI C63.10:2013 and KDB558074 D01 DTS Meas Guidance v05r02

7.1 Test Setup

7.2 Limit

N/A

7.3 Test procedure

1. Set RBW = 1% to 5% of the OBW.
2. Set the video bandwidth (VBW) ≥ 3 x RBW.
3. Detector = Peak.
4. Trace mode = max hold.
5. Sweep = auto couple.
6. Allow the trace to stabilize.
7. Measure the maximum width of the emission that is constrained by the frequencies associated with the two outermost amplitude points (upper and lower frequencies) that are attenuated by 6 dB relative to the maximum level measured in the fundamental emission.

7.4 DEVIATION FROM STANDARD

No deviation.

7.5 Test Result

Measurement Data : The detailed test data see Appendix III

8. Maximum Peak Output Power

Test Requirement:	FCC Part15 C Section 15.247 (b)(3)
Test Method:	ANSI C63.10:2013
Limit:	GFSK:30 dBm π/4-DQPSK & 8-DPSK:20.97 dBm
EIRP Limit:	36dBm

8.1 Block Diagram Of Test Setup

8.2 Limit

For frequency hopping systems operating in the 2400-2483.5 MHz band employing at least 75 non-overlapping hopping channels, and all frequency hopping systems in the 5725-5850 MHz band: 1 watt. For all other frequency hopping systems in the 2400-2483.5 MHz band: 0.125 watts.

For FHSs operating in the band 2400-2483.5 MHz, the maximum peak conducted output power shall not exceed 1.0 W if the hopset uses 75 or more hopping channels; the maximum peak conducted output power shall not exceed 0.125 W if the hopset uses less than 75 hopping channels. The e.i.r.p. shall not exceed 4 W.

8.3 Test procedure

1. Remove the antenna from the EUT and then connect a low RF cable from the antenna port to the spectrum.

2. Set the spectrum analyzer: RBW = 2MHz. VBW =2MHz. Sweep = auto; Detector Function = Peak.

3. Keep the EUT in transmitting at lowest, medium and highest channel individually. Record the max value.

8.4 DEVIATION FROM STANDARD

No deviation.

8.5 Test Result

Measurement Data : The detailed test data see Appendix III

9. HOPPING CHANNEL SEPARATION

Test Requirement:	FCC Part15 C Section 15.247 (a)(1)
Test Method:	ANSI C63.10:2013
Receiver setup:	RBW=300KHz, VBW=300KHz, detector=Peak
Limit:	GFSK: 20dB bandwidth π/4-DQPSK : 0.025MHz or 2/3 of the 20dB bandwidth (whichever is greater)

9.1 Test Setup

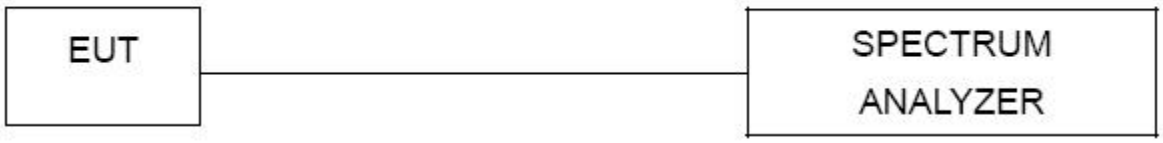

9.2 Test procedure

1. Remove the antenna from the EUT and then connect a low RF cable from the antenna port

to the spectrum.

2. Set the spectrum analyzer: RBW = 300kHz. VBW = 300kHz , Span = 3.0MHz. Sweep = auto; Detector Function = Peak. Trace = Max hold.

3. Allow the trace to stabilize. Use the marker-delta function to determine the separation between the peaks of the adjacent channels. The limit is specified in one of the subparagraphs of this Section Submit this plot.

9.3 DEVIATION FROM STANDARD

No deviation.

9.4 Test Result

Measurement Data : The detailed test data see Appendix III

10.NUMBER OF HOPPING FREQUENCY

Test Requirement:	FCC Part15 C Section 15.247 (a)(1)(iii)
Test Method:	ANSI C63.10:2013
Receiver setup:	RBW=300kHz, VBW=300kHz, Frequency range=2400MHz-2483.5MHz, Detector=Peak
Limit:	15 channels

10.1 Test Setup

10.2 Test procedure

1. Remove the antenna from the EUT and then connect a low RF cable from the antenna port to the spectrum.

2. Set the spectrum analyzer: RBW = 100kHz. VBW = 300kHz. Sweep = auto; Detector Function = Peak. Trace = Max hold.

3. Allow the trace to stabilize. It may prove necessary to break the span up to sections. in order to clearly show all of the hopping frequencies. The limit is specified in one of the subparagraphs of this Section.

4. Set the spectrum analyzer: Start Frequency = 2.4GHz, Stop Frequency = 2.4835GHz. Sweep=auto;

10.3 DEVIATION FROM STANDARD

No deviation.

10.4 Test Result

Measurement Data : The detailed test data see Appendix III

11. DWELL TIME

Test Requirement:	FCC Part15 C Section 15.247 (a)(1)(iii)
Test Method:	ANSI C63.10:2013
Receiver setup:	RBW=910KHz, VBW=910KHz, Span=0Hz, Detector=Peak
Limit:	0.4 Second

11.1 Test Setup

11.2 Test procedure

1. Remove the antenna from the EUT and then connect a low RF cable from the antenna port to the spectrum.

2. Set spectrum analyzer span = 0Hz;

3. Set RBW = 910KHz and VBW = 910KHz.Sweep = as necessary to capture the entire dwell time per hopping channel. Set the EUT for DH5, DH3 and DH1 packet transmitting.

4. Use the marker-delta function to determine the dwell time. If this value varies with different modes of operation (e.g.. data rate. modulation format. etc.). repeat this test for each variation. The limit is specified in one of the subparagraphs of this Section. Submit this plot(s).

11.3 DEVIATION FROM STANDARD

No deviation.

11.4 Test Result

Measurement Data : The detailed test data see Appendix III

12. Antenna Requirement

Standard requirement:	FCC Part15 C Section 15.203 /247(c)
15.203 requirement: An intentional radiator shall be designed to ensure that no antenna other than that furnished by the responsible party shall be used with the device. The use of a permanently attached antenna or of an antenna that uses a unique coupling to the intentional radiator, the manufacturer may design the unit so that a broken antenna can be replaced by the user, but the use of a standard antenna jack or electrical connector is prohibited. 15.247(c) (1)(i) requirement: (i) Systems operating in the 2400-2483.5 MHz band that is used exclusively for fixed. Point-to-point operations may employ transmitting antennas with directional gain greater than 6dBi provided the maximum conducted output power of the intentional radiator is reduced by 1 dB for every 3 dB that the directional gain of the antenna exceeds 6dBi.	
EUT Antenna:	
The antenna is Ceramic antenna, the best case gain of the antennas is 2.55 dBi, reference to the Appendix -EUT PHOTO Internal PhotosI for details	

13. Test Setup Photo

Reference to the appendix **Test Setup Photo** for details.

14. EUT Constructional Details

Reference to the appendix External Photos & Internal Photos for details.

※※※※※ END OF REPORT ※※※※※