TEST REPORT

Job No.	:	**GPEM2409000725EC**
Test Report No.	:	**F690501-RF-EMC002990**
Applicant	:	**Medi-IoT Co.,Ltd.**
Product Name	:	**MEDI-EYE**
Model Name	:	**ME-01**
Standards	:	**FCC Part 15 Subpart B**
FCC ID	:	**2BL7RMEDIEYE-W1**
Date of Receipt	:	**September 2, 2024**
Date of Test	:	**November 11, 2024 ~ November 13, 2024**
Date of Issue	:	**November 19, 2024**
Test Result	:	**Complied**

1) This test report does not assure KOLAS accreditation.
2) The results of this test report are effective only to the items tested.
3) The SGS Korea is not responsible for the sampling, the results of this test report apply to the sample as received.

	Tested by (Name, signature)	Approved by (Name, signature)
Affirmation	***Lucas Ku***	***Julia Choi***

SGS Korea Co., Ltd. Gunpo Laboratory
4, LS-ro 182beon-gil, Gunpo-si, Gyeonggi-do, 15807, KOREA

Remarks :
This document is issued by the Company subject to its General Conditions of Service printed overleaf, available on request or accessible at http://www.sgs.com/en/Terms-and-Conditions.aspx and, for electronic format documents, subject to Terms and Conditions for Electronic Documents at www.sgs.com/terms_e-document.htm.
The results shown in this test report refer only to the sample(s) tested unless otherwise stated. This Test Report cannot be reproduced, except in full.

Contents

1. Test Laboratory 4
1.1 General information 4
2. General Information of E.U.T. 5
2.1 Applicant Information 5
2.2 General Information of E.U.T. 5
2.3 Configurations of E.U.T 5
3. E.U.T. Operation and Test Configuration 6
3.1 Peripheral Equipments 6
3.2 Cable List 6
3.3 Operating Modes and Conditions 6
3.4 Test System Layout 6
3.5 Modifications to the test items during testing 6
4. Test Results 7
4.1 Summary 7
4.2 Note 7
5. Emission Test 8
5.1 Test Method and Limits 8
5.2 Test Limits 8
5.3 Conducted Emission 9
5.3.1 Test Equipments 9
5.3.2 Environment Conditions 9
5.3.3 Test Results 10
5.4 Radiated Emission 12
5.4.1 Test Equipments 12
5.4.2 Environment Conditions 12
5.4.3 Test Result 13
Appendix A: Measurement Uncertainty 15

Revision History

Revision	Report Number	Description
0	F690501-RF-EMC002990	Initial

1. Test Laboratory

1.1 General information

Name	SGS Korea Co., Ltd.
- Branch Site	4, LS-ro 182beon-gil, Gunpo-si, Gyeonggi-do, Republic of Korea Tel. 82 31 428 5700 Fax. 82 31 427 5370
- Branch Site-3	35, Giheungdanji-ro 121beon-gil, Giheung-gu, Yongin-si, Gyeonggi-do, Republic of Korea Tel. 82 31 548 0710 Fax. 82 31 548 0719
- Branch Site-4	12, Dongtansandan 10-gil, Hwaseong-si, Gyeonggi-do, 18487, Republic of Korea Tel. 82 31 8007 5302 Fax. 82 31 427 2370
Website	http://www.sgsgroup.kr/ee

SGS Korea Co., Ltd. has been accredited by the agencies listed in the following table;

Accreditation	Accreditation bodies	Accreditation No.
KC	MSIT- RRA	KR0150
FCC	FCC (MRA)	
IC	IC (MRA)	
Vietnam-MIC	Vietnam-MIC	
Japan EMI	VCCI	C-14102, T-11156, R-13662, G-20037
KOLAS	KATS - KOLAS	Testing No.123
CBTL	IECEE	TL 146
SDPPI	SDPPI	-

2. General Information of E.U.T.

2.1 Applicant Information

Applicant	Medi-IoT Co.,Ltd.
Applicant Address	117-3, Hoegi-ro, Dongdaemun-gu, Seoul, Republic of Korea
Manufacturer	Medi-IoT Co.,Ltd.
Manufacturer Address	117-3, Hoegi-ro, Dongdaemun-gu, Seoul, Republic of Korea

2.2 General Information of E.U.T.

Classification	Description
Product Name	MEDI-EYE
Model Name	ME-01
Alt. Model Name	-
Model Differences	-
Serial No.	SN00000001
EMI Classification	Class B
Internal Clock Frequency	64 ㎒(Bluetooth: 2 402 ~ 2 480 ㎒)
Rated Power	5 Vd.c.
Tested Power	120 V~, 60 ㎐
H/W Version	1.00
S/W Version	1.00
Port	USB(C-TYPE)
Components	-
Function	Treatment for Eye disease

2.3 Configurations of E.U.T

Description	Model	Serial No.	Manufacturer	Note
LED board	MedEyE_led	-	-	2 EA
USB board	MedEyE_Sub USB	-	-	-
Main board	MedEyE_Main	-	-	-
Voice Module	SNR9816VR_TTS	-	-	-
Sub side board	MedEyE_Sub Side TACT	-	-	-
Sub LED board	MedEyE_Sub LED	-	-	-
Sub board	MedEyE_Sub	-	-	-

3. E.U.T. Operation and Test Configuration

3.1 Peripheral Equipments

Description	Model	Serial No.	Manufacturer	Note.
AC/DC Adapter	ETA-U91KWK	-	Dongguan Samsung Electro-mechanics Co., Ltd.	-
Mobile Phone	SM-N900S	-	Samsung Electronics Co., Ltd.	-

3.2 Cable List

Start		END		Cable Spec.		Used core
Name	I/O Port	Name	I/O Port	Length (m)	Shield	
EUT	USB (C-TYPE)	AC/DC Adapter	DC OUT	1.2	shielded	-

3.3 Operating Modes and Conditions

Operating mode		Operating condition
01	Operating+Charging	Status that the EUT is light on and charge at the same time.

3.4 Test System Layout

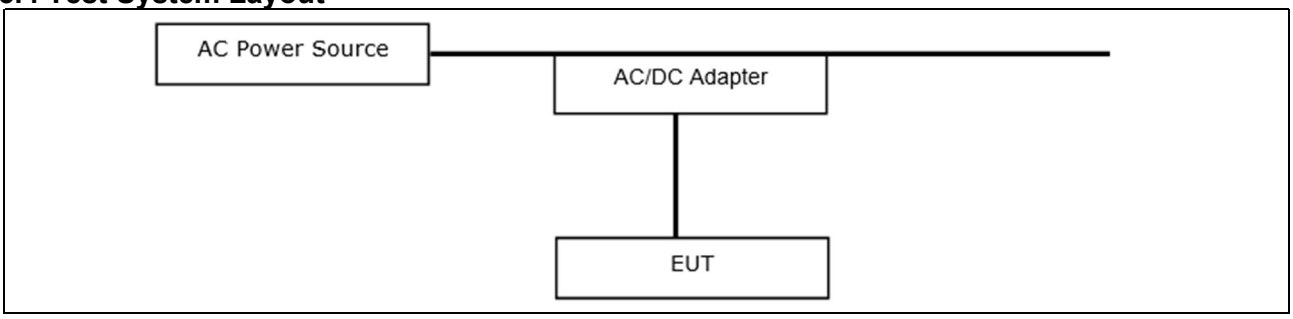

3.5 Modifications to the test items during testing

■	No modifications done during testing
□	Modification done during testing (see details below)
No.	Description of modification (if any)
1	
2	

4. Test Results

4.1 Summary

Test Items	Standards	Test Results
Conducted Emission	FCC Part 15 Subpart B Section 15.107 ANSI C63.4a:2017	Complied
Radiated Emission	FCC Part 15 Subpart B Section 15.109 ANSI C63.4a:2017	Complied

4.2 Note

1 Test Methods of all test items are performed according to the basic standard in subclause 4.1.

2

Emission Test

5.1 Test Method and Limits

Test Items	Measuring Frequency Range	RBW	Measuring Distance
Conducted Emission	0.15 MHz - 30 MHz	9 kHz	-
Radiated Emission	30 MHz - 1 GHz	120 kHz	10 m or 3 m
	Above 1 GHz	1 MHz	3 m

5.2 Test Limits

Frequency Range	Limits(dBμV)		Class
	Quasi-peak	CISPR-Average	
0.15 MHz - 0.5 MHz	79	66	Class A
0.5 MHz - 30 MHz	73	60	
0.15 MHz - 0.5 MHz	66 to 56 Note1	56 to 46 Note1	Class B
0.5 MHz - 5 MHz	56	46	
5 MHz - 30 MHz	60	50	

[Table 2.1 Conducted Emission Limits]

Frequency Range	Limits(dBμV/m)	Class
	Quasi-peak	
30 MHz - 88 MHz	39.0	Class A (10 m method)
88 MHz - 216 MHz	43.5	
216 MHz - 960 MHz	46.5	
960 MHz - 1 GHz	49.5	
30 MHz - 88 MHz	40.0	Class B (3 m method)
88 MHz - 216 MHz	43.5	
216 MHz - 960 MHz	46.0	
960 MHz - 1 GHz	54.0	

[Table 2.2 Radiated Emission Limits below 1 GHz]

Frequency Range	Limits(dBμV)		Class
	Peak	CISPR-Average	
Above 1 GHz	79.5	59.5	Class A
	74.0	54.0	Class B

[Table 2.3 Radiated Emission Limits Above 1 GHz Note2]

Note 1. The lower limit shall apply at the transition frequencies. The limit decreases linearly with the logarithm of that frequency.
Note 2. The limits of class A equipment is extrapolated using an extrapolation factor of 20 dB/decade because it was measured at 3 m distance not 10 m distance.

5.3 Conducted Emission

5.3.1 Test Equipments

Description	Model No.	Manufacturer	Serial No	Cal Due. Date
EMI TEST RECEIVER	ESU8	R&S	100128	2025-05-28
2-LINE V-NETWORK	ENV216	R&S	101180	2025-08-09
PULSE LIMITER	ESH3-Z2	R&S	100283	2025-08-21
RF Cable	EMH-1Lab-CE-01	-	-	2025-01-05

Note. Measuring software is below
- Branch Site : EMC32(V10.60.20) from R&S
- Branch Site-3 : EMC32(V10.40.10) from R&S
- Branch Site-4 : EMC32(V10.40.00) from R&S

5.3.2 Environment Conditions

Test Site	Shield Room in Branch site-3
Temperature	(Minimum 24.3, Maximum 24.5) ℃
Humidity	(Minimum 32.0, Maximum 33.0) % R.H.
Atmospheric Pressure	(Minimum 101.2, Maximum 101.2) kPa
Test Date	2024-11-13

5.3.3 Test Results

Live Line_01 Mode

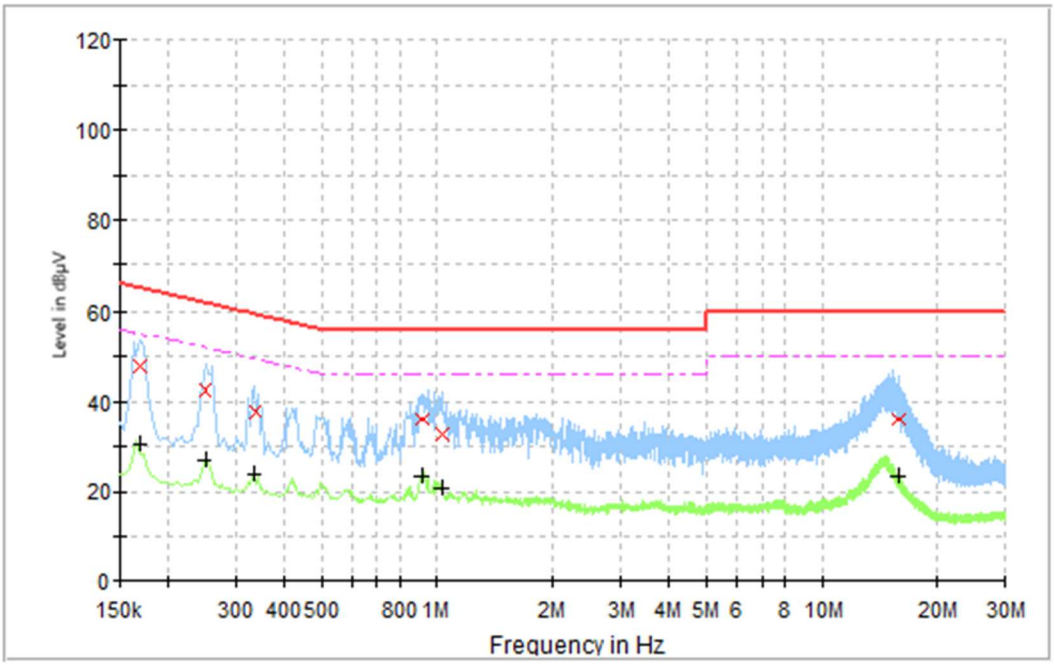

Final_Result

Frequency (MHz)	QuasiPeak (dB¥µV)	CAverage (dB¥µV)	Limit (dB¥µV)	Margin (dB)	Meas. Time (ms)	Bandwidth (kHz)	Line	Filter	Corr. (dB)
0.170	---	30.30	54.96	24.66	15 000.0	9.000	L1	ON	19.6
0.170	47.53	---	64.96	17.43	15 000.0	9.000	L1	ON	19.6
0.250	---	26.86	51.76	24.89	15 000.0	9.000	L1	ON	19.6
0.250	42.31	---	61.76	19.44	15 000.0	9.000	L1	ON	19.6
0.338	---	23.97	49.25	25.28	15 000.0	9.000	L1	ON	19.6
0.338	37.62	---	59.25	21.63	15 000.0	9.000	L1	ON	19.6
0.914	---	23.42	46.00	22.58	15 000.0	9.000	L1	ON	19.6
0.914	35.78	---	56.00	20.22	15 000.0	9.000	L1	ON	19.6
1.030	---	20.80	46.00	25.20	15 000.0	9.000	L1	ON	19.6
1.030	32.54	---	56.00	23.46	15 000.0	9.000	L1	ON	19.6
15.778	---	23.53	50.00	26.47	15 000.0	9.000	L1	ON	20.4
15.778	35.82	---	60.00	24.18	15 000.0	9.000	L1	ON	20.4

Neutral Line_01 Mode

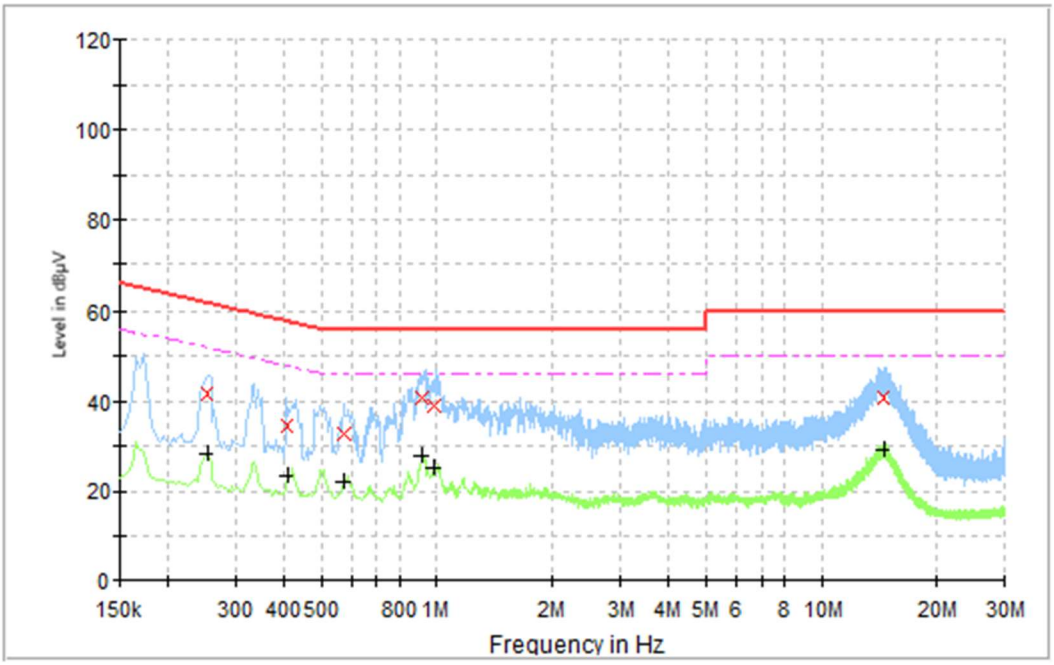

Final_Result

Frequency (MHz)	QuasiPeak (dBµV)	CAverage (dBµV)	Limit (dBµV)	Margin (dB)	Meas. Time (ms)	Bandwidth (kHz)	Line	Filter	Corr. (dB)
0.254	---	28.37	51.63	23.25	15 000.0	9.000	N	ON	19.6
0.254	41.69	---	61.63	19.94	15 000.0	9.000	N	ON	19.6
0.410	---	23.29	47.65	24.36	15 000.0	9.000	N	ON	19.6
0.410	34.21	---	57.65	23.44	15 000.0	9.000	N	ON	19.6
0.574	---	22.18	46.00	23.82	15 000.0	9.000	N	ON	19.6
0.574	32.48	---	56.00	23.52	15 000.0	9.000	N	ON	19.6
0.922	---	27.76	46.00	18.24	15 000.0	9.000	N	ON	19.6
0.922	40.75	---	56.00	15.25	15 000.0	9.000	N	ON	19.6
0.986	---	25.26	46.00	20.74	15 000.0	9.000	N	ON	19.6
0.986	39.02	---	56.00	16.98	15 000.0	9.000	N	ON	19.6
14.438	---	29.07	50.00	20.93	15 000.0	9.000	N	ON	20.4
14.438	40.62	---	60.00	19.38	15 000.0	9.000	N	ON	20.4

Note. Measurement Uncertainty : See Appendix A

- Line (L1) : Live Line of AC Power
- Line (N) : Neutral Line of AC Power
- Margin = Limit – Quasi Peak or CAverage
- Corr. = LISN Factor + Cable loss + Pulse Limiter factor

Ex) In case

Freq ; 0.5 MHz, level ; 30 dB(µV), CL ; 0.2 dB, LISN ; 9.5 dB, P/L: 9.8 dB

Result = Level + CL + LISN + P/L
= 30 + 0.2 + 9.5 + 9.8
= 49.5

Margin = Limit – Result
= 79 - 49.5
= 29.5

5.4 Radiated Emission

5.4.1 Test Equipments

Equipment	Model	Manufacturer	Serial No	Cal Due. Date
EMI TEST RECEIVER	ESU40	R&S	100075	2025-01-17
TRILOG BROADBAND ANTENNA	VULB 9163	SCHWARZBECK	01126	2025-02-26
Double Ridged Horn Antenna	HF907	R&S	100208	2025-03-04
PREAMPLIFIER	AM-1431	MITEQ	1336160	2025-05-31
AMPLIFIER	SCU 18	R&S	10070	2025-08-21
RF Cable	EMH-1Lab-RE-01	-	-	2025-01-05
RF Cable	EMH-1Lab-RE-02	-	-	2025-01-05
RF Cable	EMH-1Lab-RE-03	-	-	2025-01-05
RF Cable	EMH-1Lab-RE-04	-	-	2025-01-05
RF Cable	EMH-1Lab-RE-05	-	-	2025-01-05
RF Cable	EMH-1Lab-RE-06	-	-	2025-01-05

Note. Measuring software is below
- Branch Site : ELECTRA(V5.02.0) from R&S
- Branch Site-3 : EMC32(V10.40.10) from R&S
- Branch Site-4 : EMC32(V10.40.10) from R&S

5.4.2 Environment Conditions

Test Site	10 m SEMI-ANECHOIC CHAMBER in Branch site-3
Temperature	(Minimum 21.0, Maximum 21.1) ℃
Humidity	(Minimum 35.0, Maximum 36.0) % R.H.
Atmospheric Pressure	(Minimum 101.0, Maximum 101.0) kPa
Test Date	2024-11-11

5.4.3 Test Result

01 Mode

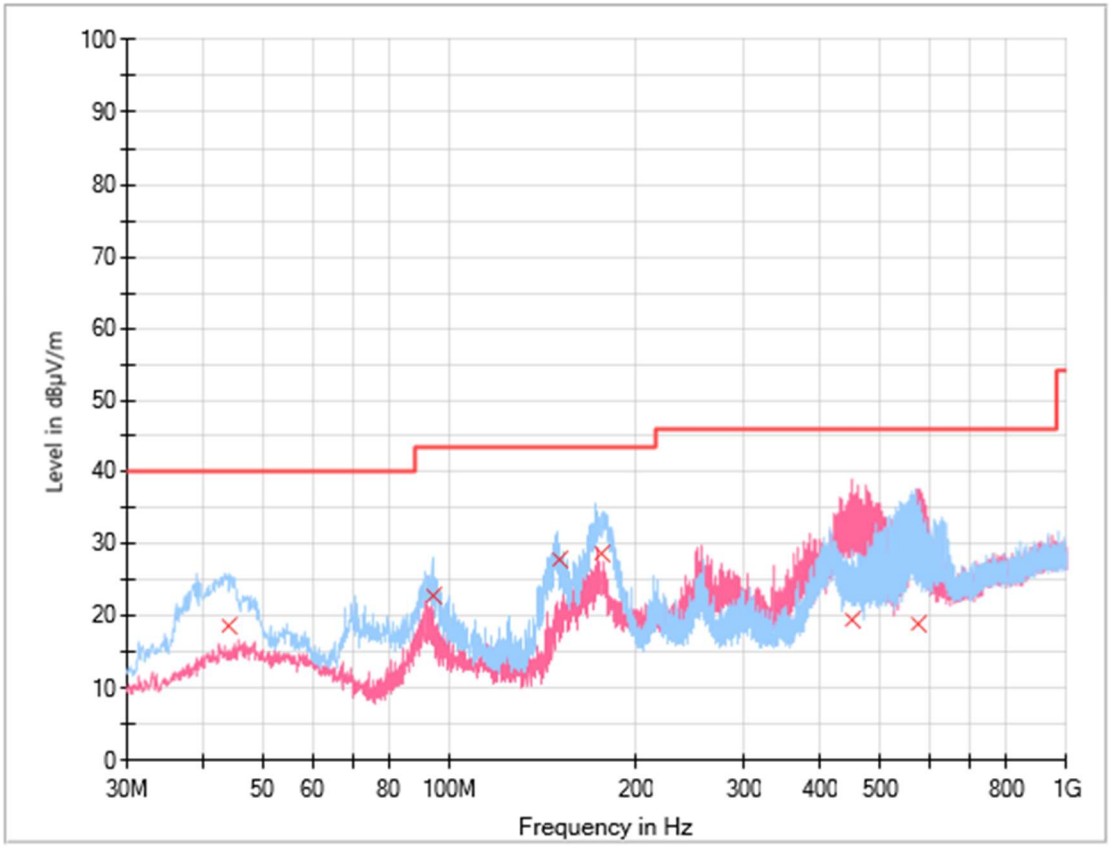

Final_Result

Frequency (MHz)	QuasiPeak (dBµV/m)	Limit (dBµV/m)	Margin (dB)	Meas. Time (ms)	Bandwidth (kHz)	Height (cm)	Pol	Azimuth (deg)	Corr. (dB/m)
43.871	18.60	40.00	21.40	15 000.0	120.000	100.0	H	0.0	-17.3
93.826	22.97	43.50	20.53	15 000.0	120.000	100.0	H	152.0	-19.3
150.668	27.91	43.50	15.59	15 000.0	120.000	100.0	H	250.0	-21.7
176.955	28.81	43.50	14.69	15 000.0	120.000	100.0	H	120.0	-20.4
448.361	19.59	46.00	26.41	15 000.0	120.000	200.0	V	7.0	-11.6
574.461	19.00	46.00	27.00	15 000.0	120.000	200.0	V	20.0	-8.9

Note. Measurement Uncertainty: See Appendix A
- POL H = Horizontal
- POL V = Vertical
- Margin = Limit – Quasi Peak
- Corr. = Antenna Factor + Cable loss – Amplifier Gain

01 Mode

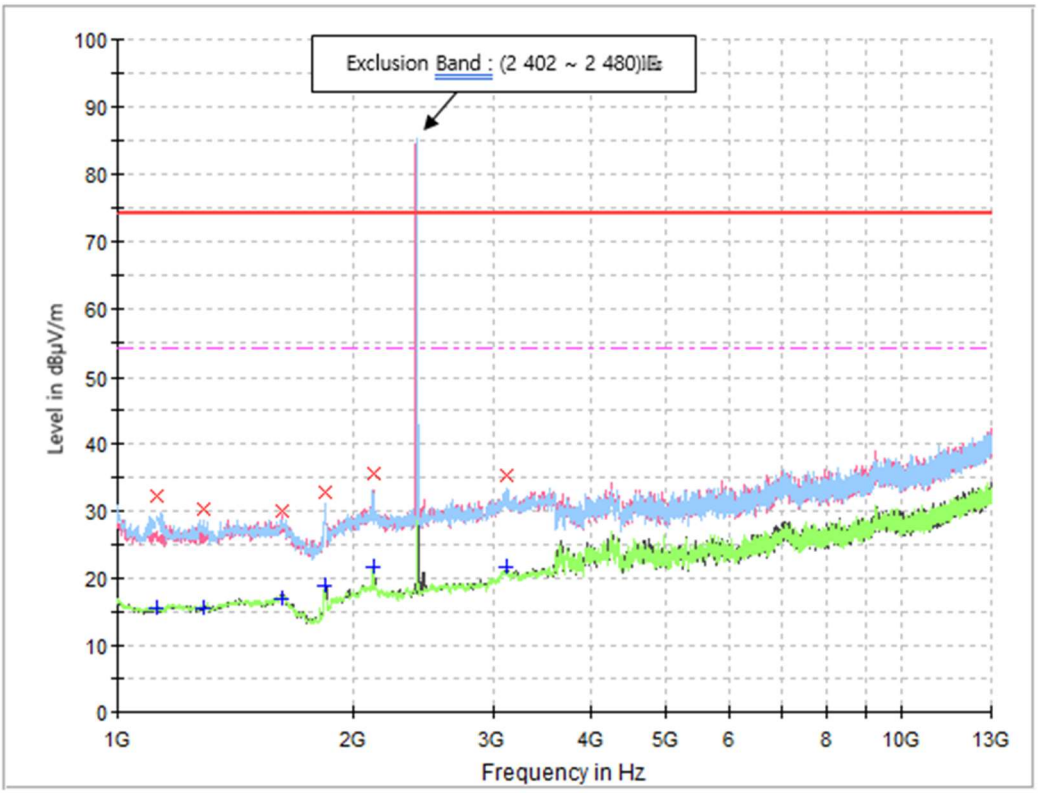

Final Result

Frequency (㎒)	MaxPeak (dBµV/m)	CAverage (dBµV/m)	Limit (dBµV/m)	Margin (dB)	Meas. Time (㎳)	Bandwidth (㎑)	Height (㎝)	Pol	Azimuth (deg)	Corr. (dB/m)
1 124.100	32.30	---	74.00	41.70	15 000.0	1 000.000	100.0	H	63.0	-16.8
1 124.100	---	15.64	54.00	38.36	15 000.0	1 000.000	100.0	H	63.0	-16.8
1 285.600	30.46	---	74.00	43.54	15 000.0	1 000.000	100.0	H	77.0	-16.3
1 285.600	---	15.60	54.00	38.40	15 000.0	1 000.000	100.0	H	77.0	-16.3
1 623.900	---	16.89	54.00	37.11	15 000.0	1 000.000	100.0	V	351.0	-13.8
1 623.900	30.17	---	74.00	43.83	15 000.0	1 000.000	100.0	V	351.0	-13.8
1 839.800	32.86	---	74.00	41.14	15 000.0	1 000.000	100.0	H	158.0	-12.8
1 839.800	---	18.84	54.00	35.16	15 000.0	1 000.000	100.0	H	158.0	-12.8
2 123.700	35.58	---	74.00	38.42	15 000.0	1 000.000	100.0	V	149.0	-11.0
2 123.700	---	21.65	54.00	32.35	15 000.0	1 000.000	100.0	V	149.0	-11.0
3 121.600	---	21.72	54.00	32.28	15 000.0	1 000.000	100.0	H	172.0	-6.8
3 121.600	35.43	---	74.00	38.57	15 000.0	1 000.000	100.0	H	172.0	-6.8

Note. Measurement Uncertainty: See Appendix A

- AF = Antenna Factor
- CL = Cable Loss
- AMP = Amplifier Gain
- POL H = Horizontal
- POL V = Vertical
- A = Angle
- H = Height
- Margin = Limit – Result
- Corr. = AF + CL – AMP

** The value of 'Level' includes 'Corr.'.

Ex) In case

Freq ; 100 ㎒, level ; 30 dB(µV/m), AF ; 10 dB/m, CL ; 4 dB, Amp ; 25 dB

Result = Level + AF + CL – Amp
= 30 + 10 + 4 - 25
= 19

Margin = Limit – Result
= 43.5 – 19
= 24.5

Appendix A: Measurement Uncertainty

Test Method			Measurement Uncertainty
Conducted Emission		ENV216	3.0 dB (The confidential level is 95 %, *k*=2)
		ESH2-Z5	2.8 dB (The confidential level is 95 %, *k*=2)
		ESH3-Z6	3.0 dB (The confidential level is 95 %, *k*=2)
Conducted Emission - Signal		ISN T800	5.3 dB (The confidential level is 95 %, *k*=2)
		ISNT8-Cat6	5.4 dB (The confidential level is 95 %, *k*=2)
		ISN S751	6.8 dB (The confidential level is 95 %, *k*=2)
Disturbance Voltage at Antenna Terminal		2.4 dB (The confidential level is 95 %, *k*=2)	
Radiated Emission	9 kHz - 30 MHz	Horizontal	3.4 dB (The confidential level is 95 %, *k*=2)
		Vertical	3.4 dB (The confidential level is 95 %, *k*=2)
	30 MHz - 1 000 MHz	Horizontal	4.6 dB (The confidential level is 95 %, *k*=2)
		Vertical	5.0 dB (The confidential level is 95 %, *k*=2)
	1 GHz - 18 GHz	Horizontal	3.6 dB (The confidential level is 95 %, *k*=2)
		Vertical	3.6 dB (The confidential level is 95 %, *k*=2)

Table A.1 Measurement Uncertainty of Branch Site

Test Method			Measurement Uncertainty
Conducted Emission		ENV216	3.3 dB (The confidential level is 95 %, *k*=2)
		ESH3-Z6	3.3 dB (The confidential level is 95 %, *k*=2)
		ESH2-Z5	3.1 dB (The confidential level is 95 %, *k*=2)
		NNLK8129	3.2 dB (The confidential level is 95 %, *k*=2)
Conducted Emission - Signal		ISN T800	5.5 dB (The confidential level is 95 %, *k*=2)
		ISN ST08	6.6 dB (The confidential level is 95 %, *k*=2)
Radiated Emission	9 kHz - 30 MHz	Horizontal	3.4 dB (The confidential level is 95 %, *k*=2)
		Vertical	3.4 dB (The confidential level is 95 %, *k*=2)
	30 MHz - 1 000 MHz	Horizontal	4.7 dB (The confidential level is 95 %, *k*=2)
		Vertical	5.0 dB (The confidential level is 95 %, *k*=2)
	1 GHz - 18 GHz	Horizontal	3.8 dB (The confidential level is 95 %, *k*=2)
		Vertical	3.8 dB (The confidential level is 95 %, *k*=2)

Table A.2 Measurement Uncertainty of Branch Site-3

Test Method			Measurement Uncertainty
Conducted Emission		ENV216	3.5 dB (The confidential level is 95 %, *k*=2)
		ESH2-Z5	3.3 dB (The confidential level is 95 %, *k*=2)
		ESH3-Z6	3.3 dB (The confidential level is 95 %, *k*=2)
		NNLK8129	3.4 dB (The confidential level is 95 %, *k*=2)
Conducted Emission - Signal		ISN T800	5.6 dB (The confidential level is 95 %, *k*=2)
		ISN ST08	5.5 dB (The confidential level is 95 %, *k*=2)
Radiated Emission	9 kHz - 30 MHz (Triple Loop Ant.)	3.7 dB (The confidential level is 95 %, *k*=2)	
	9 kHz - 30 MHz (Loop Ant.)	Horizontal	4.2 dB (The confidential level is 95 %, *k*=2)
		Vertical	4.2 dB (The confidential level is 95 %, *k*=2)
	30 MHz - 1 000 MHz	Horizontal	4.8 dB (The confidential level is 95 %, *k*=2)
		Vertical	5.2 dB (The confidential level is 95 %, *k*=2)
	1 GHz - 18 GHz	Horizontal	4.5 dB (The confidential level is 95 %, *k*=2)
		Vertical	4.5 dB (The confidential level is 95 %, *k*=2)

Table A.3 Measurement Uncertainty of Branch Site-4

- End of Test Report -