bluebird ai

Safety · Security · Intelligence

Robin

User Manual

Azure | Google Cloud | aws

Design and specifications are subject to change without notice. The latest product information / specification can be found at Bluebird.com
© Bluebird CO., LTD. All rights reserved.

Table of Contents

Quick Installation Guide 1

Safety Instructions 1

Product Introduction 2

Installation 3

Camera Structure and Interface 4

Installation Procedure 5

Device Pairing 5

Parameter 6

After Sales Service 7

FCC Requirement 8

Quick Installation Guide

Thank you for purchasing our products. Feel free to contact us if you have any question. This manual is applicable to LD-LM-BA-1111-L1/LD-LM-BA-2222-L2 AI Camera Specification.
This manual may contain technical inaccuracies, or inconsistencies with respect to product function or operation, or printing errors. Our company will update the contents of this guide according to future enhancement of product functions and will regularly improve or update the products or procedures described in this guide. The updated contents will be added to the new version of this guide without prior notice.

Safety Instructions

The purpose of the safety note is to ensure correct operation by users to avoid danger or property loss. Before using this product, please read this instruction carefully and keep it properly for future reference.

Warning

- Using a power supply that meets the SELV (Safety Extra Low Voltage) requirements, and the rated DC voltage is 12V and the rated current is 1A conformed to the limited power source.
- Do not disassemble or modify the product in any way in case the device does not work properly, instead please contact the dealer from whom you purchased the product. Damage caused by unauthorized modification or repair to the device will not be covered by the warranty.
- In door use only. Do not expose the product to rain or water to reduce the risk of fire or electric shock.
- Installation of the product shall comply with local regulations.
- Power-off device should be used in building wiring.

Attention

- Check if proper power supply is provided before operating the product.
- Do not drop or knock the product heavily.
- Please make sure the camera lens are clean. When needed, using a slightly wet paper with alcohol to gently wipe off dust.
- Avoid direct strong light (i.e., bright light, sunlight, etc.) into the camera lens, or the image sensor in the product might get life shortened.

- Avoid direct laser light into the camera lens if laser devices are used.
- void working environment with high humidity, strong dust, extreme hot or cold (normal working temperature: - 10 ～ + 60), strong electromagnetic radiation or other critical conditions.
- Ensure proper air flow around the camera, or heat may accumulate and damage the camera.
- Avoid water or other liquid flowing into the camera.
- Pack the product with the original factory packaging or materials of comparative quality when transporting the product.
- Do not disassemble the equipment otherwise damages may be made to precise components inside the product.

Product Introduction

AI camera integrate traditional analog camera with digitized intelligent analysis capacity. Based on the latest video analysis algorithms and hardware acceleration chips by the bluebird team, the camera runs embedded Linux operating system with intelligence, stability and reliability. NVR video recording is supported for centralized storage, and analysis data can be stored on cloud to ease the management and utilization of the data.

Product features

1. Patented technology
2. Multi-objects detection and tracking. Cross-camera re-identification. Action recognition. Large scale data association.
3. Powerful hardware
4. Integrated proprietary AI engine, surging calculation and powerful performance Ultra-sensitive lens.
5. Supporting night vision.
6. Low power consumption.
7. Streamlined shape in small formfactor.
8. Good heat dissipation performance. POE (Power over Ethernet) support.
9. Convenient installation.
10. Low deployment cost.

Intelligent system

Support breakpoint continuation, network interruption, automatic front-end data storage,in

case of network interruption to ensure analysis integrity Preset multi scene AI analysis capability, It can be customized according to different uses.

Main applications

It is suitable for all kinds of occasions requiring network remote monitoring, such as:

1. Passenger flow statistics service for large outdoor scenes, indoor stadiums, large shopping malls, etc.
2. Provide remote monitoring services for nursing home, kindergartens and schools.
3. Cross-camera re-identification services for boutiques, supermarket chains, offices, etc.
4. Unattended system of indoor parking lot.
5. Assembly line monitoring, event alarm detecting service for warehouse monitoring.
6. Airport, railway station, bus station, etc.

Installation

Matters needing attention

- ⚠ When unpacking the packing box, please check carefully to make sure that the product is not damaged.
- ⚠ Please read this chapter carefully before installation.
- ⚠ Be sure to turn off the power supply of all relevant equipment during installation.
- ⚠ Check the power supply voltage to prevent device damage caused by voltage mismatch.
- ⚠ Installation environment: please do not use it in the excessive humidity or high temperature environment. Please keep good ventilation and pay attention to rain proof; Avoid installation in the environment of severe vibration.
- ⚠ If the equipment does not work normally, please contact the device supplier for inspection.
- ⚠ Please do not disassemble or modify the equipment in any way. Problems caused by unauthorized modification or repair are not covered by the warranty.

Camera Structure and Interface

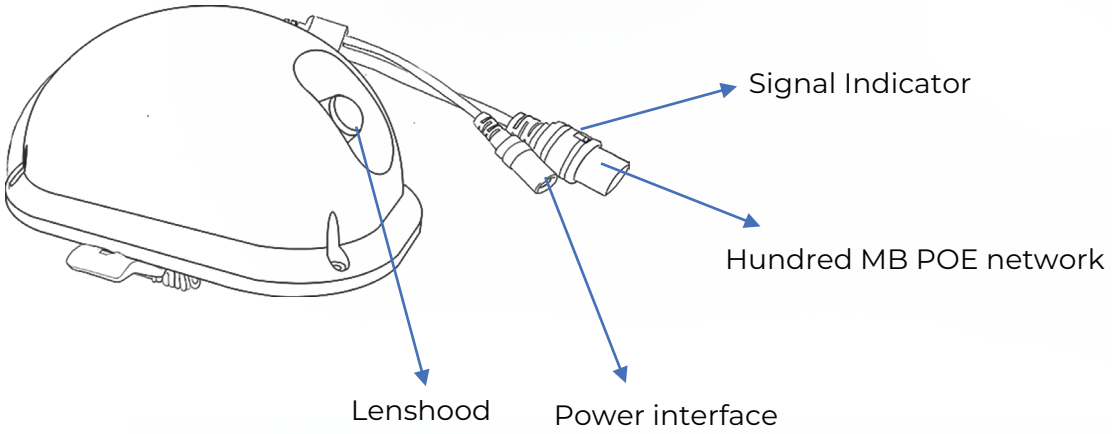

Installation instructions

AI Camera Specification is usually installed with spring buckle.

Important:

Before installing the device, please select an appropriate place. The ceiling where the device is installed should have a certain thickness and can bear at least 3 times the weight of the camera.

Components of the device

The whole camera and its accessories include the whole camera, spring buckle, M5 nut and M5 gasket, as shown in the figure below.

Installation Procedure

Installation method

Make a 7cm diameter hole in the ceiling, connect the wire and power line, and then clip the spring buckle into the hole.

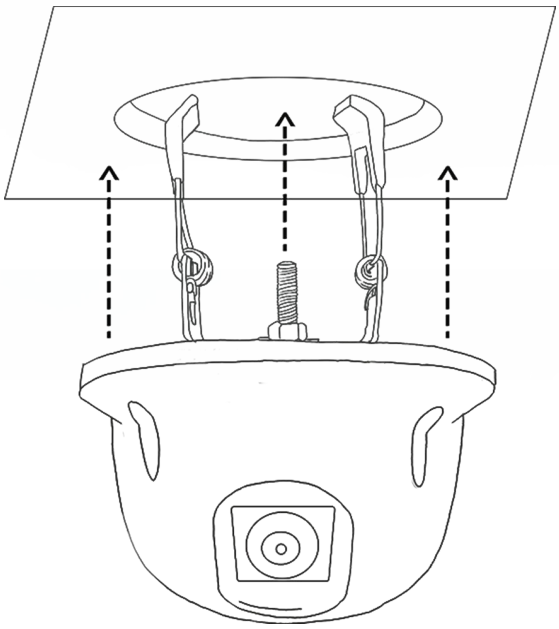

Device Pairing

1. Download the BBLink App from the App Store (iOS devices) or Google Play (Android devices).

   Download on the App Store

   GET IT ON Google Play

2. Sign up a BBLink account, If you already have an account, please Log in directly. Go to the App homepage. Tap Add Device, and scanning the QR code on the bottom of the device or on the packaging box.

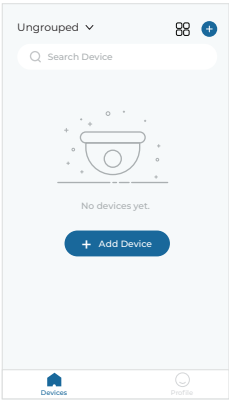

3. Allow the on-screen instructions to complete device pairing.

Attention

1. Before pairing the device, please power on the device first. You can use a power adapter or connect to a POE (Power over Ethernet) switch with a network cable for power supply.
2. When you select WiFi as the device networking method, please choose a 2.4G WiFi to connect.
3. Only one QR code can be scanned each time.
4. When pairing, please keep your mobile phone, router and device close to each other.
5. When you choose the wired or WiFi networking methods, you need to select DHCP or static IP. If you choose static IP, you are required to enter Mask, Route, DNS, starting IP and the number. The number of IP number represents how many devices you need to activate, and a maximum of 253 can be entered.

LED Status	Description
The red light flashes slowly	The device is powered
The red light flashes quickly	The device is pairing
The green light flashes slowly	The device is working
The red light and the green light flash alternately	The device is either off-line or malfunctioning

Parameter

Device Parameters

Device size	128.6mm × Width 84.6mm × 65.0mm high
Maximum frame rate	30fps
Maximum resolution	1920*1080P
Whether POE power supply is supported	yes
Camera Lens	
Lens type	CMOS
focal length	2.7mm
Lens adjustment angle range	Vertical: 15-40 degrees
Video	
Video compression standards	H. 264 and MJPEG
Low illumination	support
Network	
Network interface	1 (RJ-45, support 10m/100m bps), 2.4G WIFI
Storage function	support SD card

Continuously transfer after network interruption	support

Power Supply

Power supply mode	IEEE802.3af standard POE supply voltage /DC 12V power supply

After Sales Service

Thank you for choosing this product. In order to fully enjoy the perfect after-sales service support, please read the description of warranty card carefully and keep it properly. We will provide you with after-sales service according to Bluebird's after-sales service standard. Please check Bluebird's official website for details of after-sales service. Some of the information is excerpted as follows:

1. The warranty period starts from the date of the first purchase of the product, and the purchase date is subject to the invoice date of the purchased product. If there is no valid invoice, the warranty period will be calculated from the date of delivery. If the invoice date of the product is later than the actual delivery date of the product, the warranty period shall be calculated from the actual delivery date of the product.
2. No warranty (excerpt only, please refer to the after sales service policy for details) 1. Exceeding the specified warranty period; 2. Failure or damage caused by misuse, accident, modification, improper physical or operating environment, natural disaster, surge and improper maintenance or storage; 3. Failure or damage caused by third party products, software, services or behaviors; 4. Normal decolorization, abrasion and consumption during the use of the product; 5. The product can run normally without interruption or error; 6. Data loss or damage; 7. Consumable parts, except for malfunction due to material or process defects; 8. Unable to show the valid warranty certificate and valid original purchase invoice or receipt of the product, the original serial number of the product is altered, replaced or torn, the product has no serial number, or the product model or number on the warranty certificate is inconsistent with the actual product; 9. Not follow the attached quick installation instructions or not use the product in the intended function or environment, or any other situation that you violent the operation manual after confirmation by Bluebird.
3. Bluebird is not responsible for the additional promises made to you by the seller.

FCC Requirement

Any changes or modifications not expressly approved by the party responsible for compliance could void the user's authority to operate the equipment.
This device complies with Part 15 of the FCC Rules. Operation is subject to the following two conditions:
(1) this device may not cause harmful interference.
(2) this device must accept any interference received, including interference that may cause undesired operation.

This transmitter must not be co-located or operating in conjunction with any other antenna or transmitter.

This equipment has been tested and found to comply with the limits for a Class A digital device, pursuant to Part 15 of the FCC Rules. These limits are designed to provide reasonable protection against harmful interference when the equipment is operated in a commercial environment. This equipment generates, uses, and can radiate radio frequency energy and, if not installed and used in accordance with the instruction manual, may cause harmful interference to radio communications. Operation of this equipment in a residential area is likely to cause harmful interference in which case the user will be required to correct the interference at his own expense.

This device complies with FCC radiation exposure limits set forth for an uncontrolled environment. This device should be installed and operated with minimum distance 20cm between the radiator & your body.

bluebird ai
Safety · Security · Intelligence

Blue Bird AI Inc.,
3001 Bishop Drive,
Ste 300,
San Ramon, CA 94583

www.bluebird.com

Contact Number(s):
+1 xxx-xxx-xxx
+1 xxx-xxx-xxx