ENVO by ANZZI

ITEM: T19A

ANZZI AURA
SMART TOILET & BIDET
INSTALLATION &

V1.0
11/01/2024

Zhangzhou Solex Smart Home Co., Ltd.

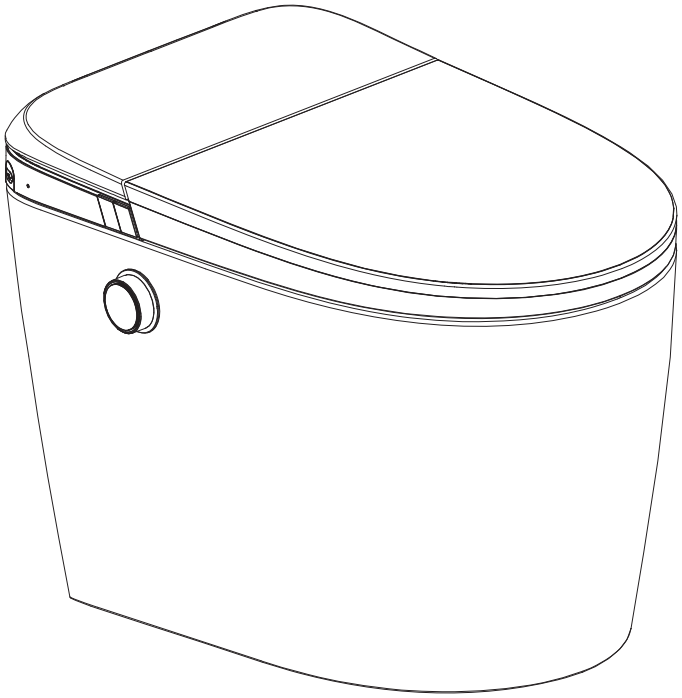

DON'T WAIT! REGISTER NOW!

Register your product within 90 days to ensure your product is recognized as an official purchase and is eligible for warranty coverage.

Register online at https://anzzi.com/pages/register or scan the QR code at PG. 2.

ENVO by ANZZI®

PRODUCT REGISTRATION*

IMPORTANT: Warranty will not be recognized unless product is registered.

Register online at https://anzzi.com/pages/register or Scan the QR code below.
Registering online is fast, secure, and ensures we receive your information.

1

SCAN QR CODE

2

FILL IN THE REGISTRATION FORM

3

CLICK SUBMIT TO FINISH PRODUCT REGISTRATION

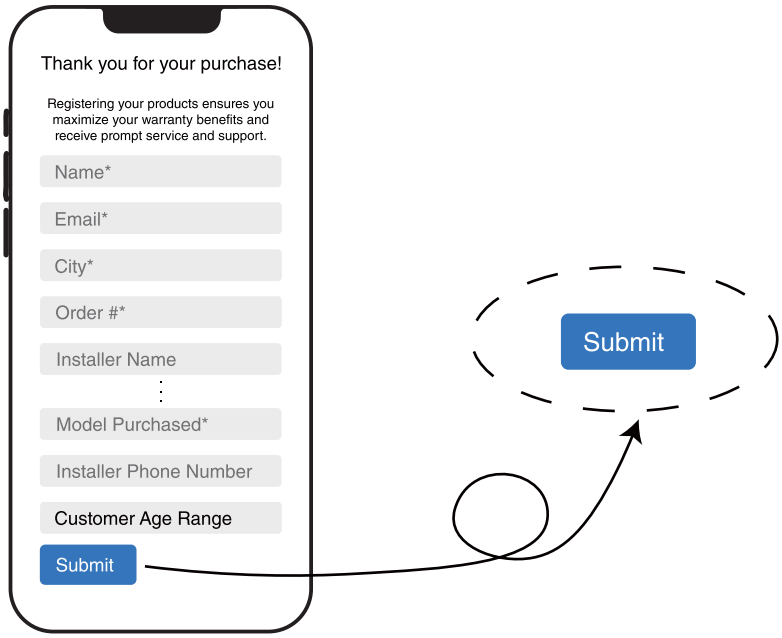

Need help? For technical support call **305-614-4070** or visit us at **www.ANZZI.com**

PRODUCT SIZE CHART

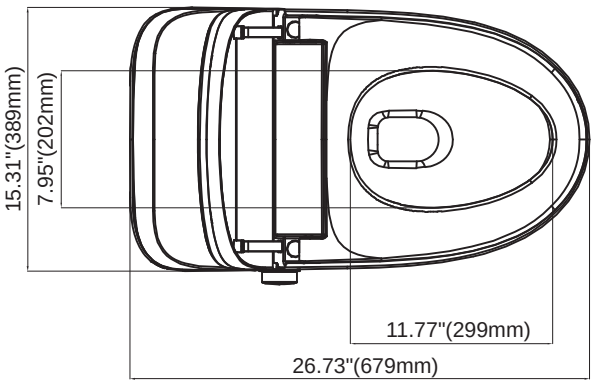

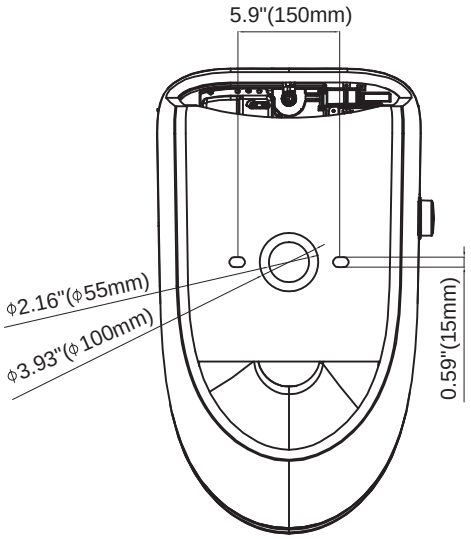

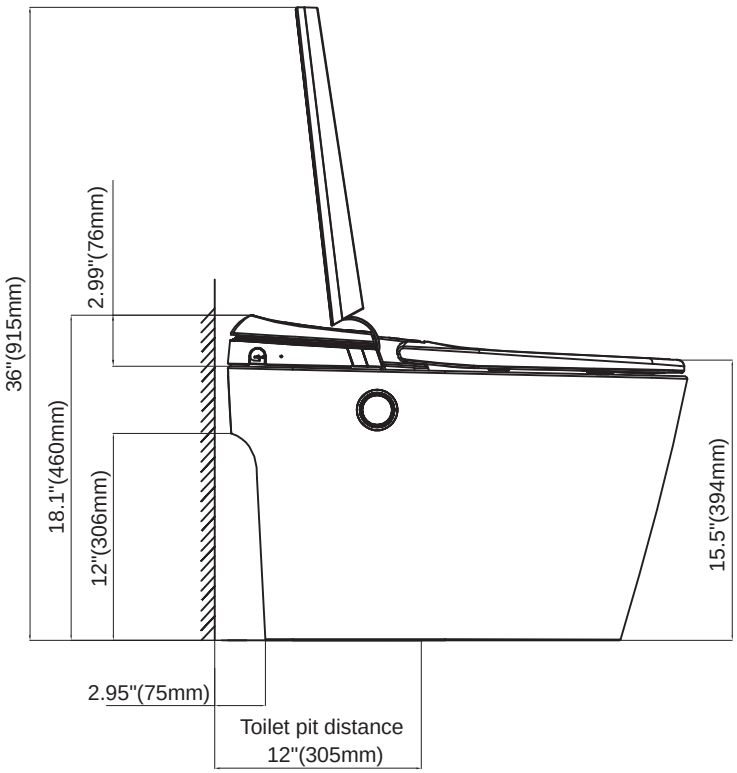

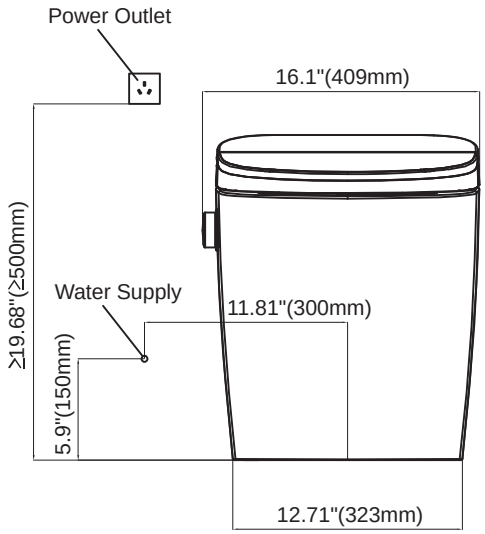

Thank you for choosing ENVO SMART TOILET. Please read and understand this entire manual before attempting to install, assemble or operate this product.

TABLE OF CONTENTS

SAFETY PRECAUTIONS ---------- PG.5

TOILET COMPONENTS ---------- PG.7

TOOLS AND MATERIALS ---------- PG.7

TOILET INSTALLATION ---------- PG.8

- STEP1 | PREPARE FOR INSTALLATION ---------- PG.8
- STEP2 | INSTALL THE TOILET ---------- PG.9
- STEP3 | REMOTE CONTROL INSTALLATION ---------- PG.11

GUIDELINES FOR FIRST USE ---------- PG.11

OPERATION INSTRUCTIONS ---------- PG.12

- REMOTE CONTROL ---------- PG.12
- TOILET BODY CONTROL ---------- PG.14

CLEANING & MAINTENANCE ---------- PG.15

- CLEAN THE FILTER SCREEN ---------- PG.15
- CLEANING OF TOILET BOWL ---------- PG.15
- NOZZLE CLEANING AND MAINTENACE ---------- PG.15
- LONG-TERM PRESERVATION ---------- PG.15
- HOW TO FLUSH DURING POWER INTERRUPTION ---------- PG.16

PRODUCT SPECIFICATIONS ---------- PG.17

TROUBLE SHOOTING ---------- PG.18

SAFETY PRECAUTIONS

Please carefully read the safety precautions before installation. This is important and must be observed.

⚠ DANGER

Only connect to a Ground-Fault Circuit-Interrupter(GFCI) protected grounded socket.

Do not remove the ground pin or use a ground adapter.

Otherwise, electric shock will be caused by fault or short circuit.

⚠ WARNING

●Any modification to your ENVO Smart Toilet will lead to warranty failure. If cables, plugs or other components need to be repaired or replaced, they need to be handled by qualified electricians.

●Any replacement shall be provided by ANZZI. The use of a third-party replacement will invalidate the warranty.

●Cut off the power supply before maintenance.

●Ensure that the bathroom is well ventilated to avoid moisture accumulation. Installing the smart toilet in a humid place may cause electrical failure of the product.

●Do not touch the power socket with wet hands, **Otherwise it may cause electric shock.**

●Do not pour water, hot water or detergent onto the top of the toilet, power supply or plug.

●Make sure the toilet is away from flames or combustibles.

●Do not put your fingers or anything at the outlet of the heater, **Otherwise it may cause burns or electric shock.**

●Do not excessively pull or bend the cable. If there is any damage to the cable or plug, cut off the power supply. Use the cable provided by ANZZI for replacement.

●Do not bend or squeeze the water inlet hose hard, **Otherwise it may lead to water leakage or reduce the water inlet pressure.**

●When power failure occurs during flushing and the nozzle is not reset, do not push it back by hand. The nozzle will reset itself after the power supply is restored.

●If your ENVO Smart Toilet has the following problems, please stop using it. Turn off power supply and supply stop.

——Pipe, hose or product leaks.

——Product breakage.

——The product has abnormal sound or peculiar smell.

——Smoke from the product.

SAFETY PRECAUTIONS

⚠ ATTENTION

●If you do not fully understand the grounding instructions or are not sure whether the product has been correctly grounded, please find a qualified electrician or sales and service personnel to check and confirm. Please find a qualified electrician to confirm that the power supply provides the matching voltage and power required by the product.

●Review all local plumbing and building codes related to products.

●Ensure that the water pressure of the water supply is 22PSI(150kPa)-108PSI(750Kpa).

●The water supply pipe must be at least 1/2" copper pipe to provide the minimum flow required for the normal operation of the product.

●Carefully check the new toilet for damage.

●Use the water inlet hose and supply stop attached to the product. The old installed hose and supply stop do not match this product.

●If the new toilet is not installed at once, please make sure the toilet sewage outlet on the floor is blocked.

●Do not stand on the toilet seat, toilet lid, toilet ceramic body, or place any heavy objects on your ENVO Smart Toilet.
Otherwise, it may be damaged and cause personal injury or soak the floor.

●Don't expose the toilet to the sun. The product may turn yellow or fade.

●Do not throw anything other than toilet paper into the toilet, otherwise it will cause blockage or flooding.

●Don't lean against the toilet lid.

●When children, the old or disabled people use this toilet, they need to pay close attention. Adjust the appropriate toilet seat temperature for the people mentioned aboved, as well as the people having allergic skin.

●Do not use this toilet when you are sleepy.

●The toilet requires fresh water only.

●Clean this product with a clean soft cloth. Do not use any irritating detergent to clean this product.

●Any replacement of parts must only be performed by qualified service personnel.

Statement: ENVO does not assume any responsibility for the losses caused by the improper installation and behavior listed above or other improper operations.

TOILET COMPONENTS

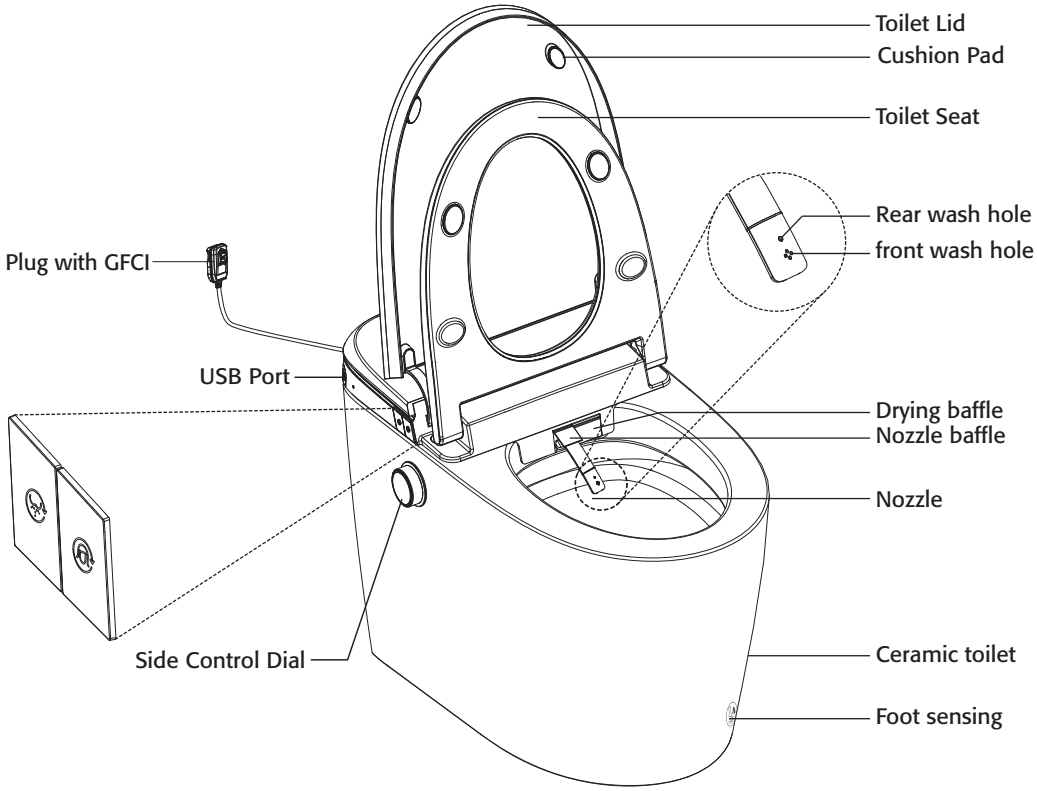

REMOTE CONTROL

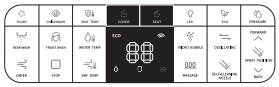

REMOTE CONTROL HOLDER

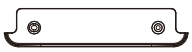

REMOTE EXPANSION SCREW GROUP (EACH 2pcs)

SEALING RING

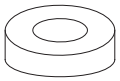

ADAPTER

INLET VALVE

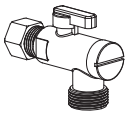

BATTERY BOX

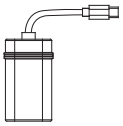

FLANGE

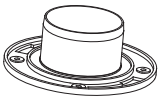

FLANGE INSTALLATION ACCESSORY GROUP

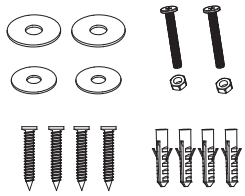

TOOLS AND MATERIALS

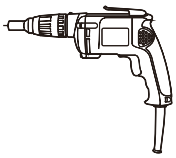

Percussion Drill

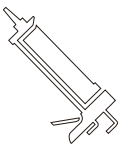

Caulk Gun & Caulk

Tape

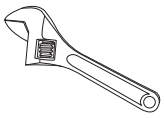

Adjustable Wrench

Pliers

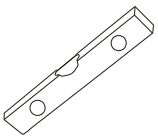

Gradienter

Steel saw

Knife

Screwdriver

Pencil

TOILET INSTALLATION

Precaution

1. Don't install our product in the room with more than 90% RH humidity (relative humidity). It is suggested to separate dry space from moist one, such as installing shower rooms or shower curtains.
2. Only the specified power supply can be used. (Other power sources may cause product failure or damage).
3. Please do not supply water or power before finishing installation.
4. Please use wires and waterproof sockets suitable for the power of this product.
5. Please install the waterproof socket at a suitable height on the wall.
6. The water-supplying pressure should be 22PSI(150kPa)-108PSI(750Kpa).
7. The toilet cannot reach full cleaning functionality if the water pressure cannot reach 0.15MPa.
8. The water-supplying temperature should be 39.2°F~95°F.

NOTICE:Please remove the dirty water from the pipe before installation. Residual sediment and other debris may clog the pipeline, which may cause damage to the bidet toilet.

STEP 1 | PREPARE FOR INSTALLATION

INSTALL THE WATER INLET VALVE

Clean the ground and dry the water before installation. Mark the central lines of the draining outlet.

NOTE: The end of valve is NPT 1/2, if it needs to be installed in the 9/16 female port, please use the adapter(included).

1. Turn on the old supply and flush for 1 minute, to flush out any sundries that may damage the toilet.
2. Turn off the supply stop and remove it.
3. Wrap sealing tape on the end(1/2 NPT male or adapter) thread of the water supply pipe(not provided) to ensure good sealing performance. Screw the value onto water supply pipe.

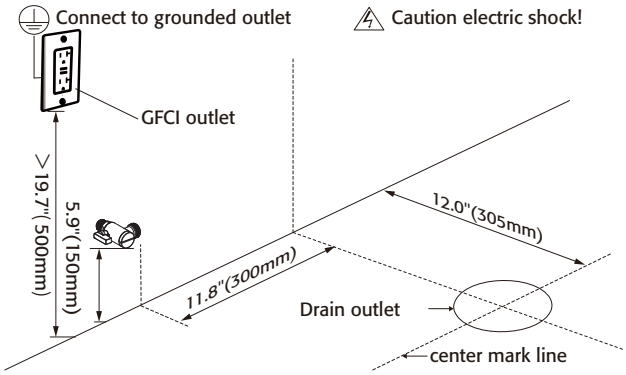

CONFIRM WATER FLOW

1. Install a matching hose, which is guided to a bucket of 3 gallons(11.4L) or more. If you cannot find a matching hose, you can use a cloth to cover the outlet of the supply stop and place the bucket under the valve.
2. Turn on the supply stop, ensure that the water can outflow at least 1 gallon within 10 seconds.
3. If the water pressure is too low. Please use a booster pump to increase the water.
4. Close the supply stop and remove the installed hose.

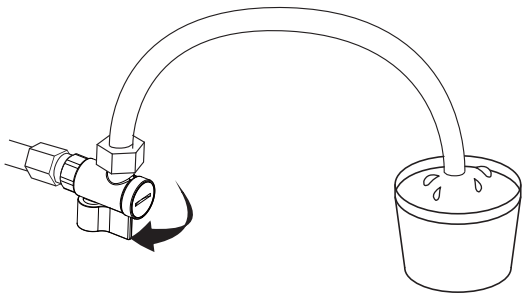

MARK THE CURVE OF CERAMICS

Align the drain hole of ceramic with the central line. Mark the curve of ceramics for later installation.
Glass cement application: Glue the outline with glass cement to install the toilet.

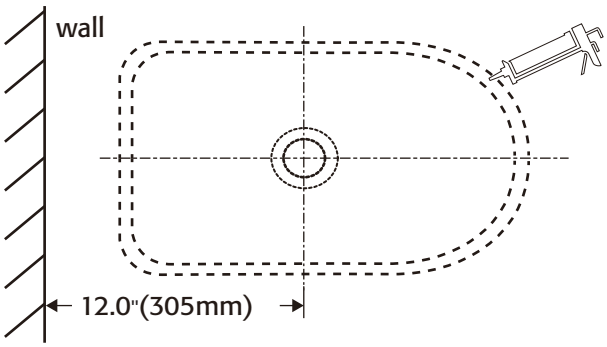

STEP 2 | INSTALL THE TOILET

REMOVE THE FRONT SEAT

Remove the fixing screws of the toilet; remove the connecting pipes and wires of the toilet, separate the front seat from the toilet.

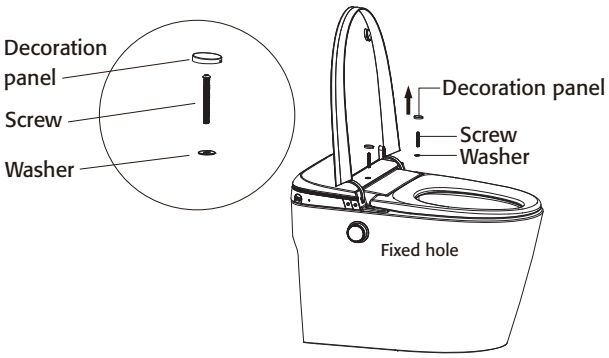

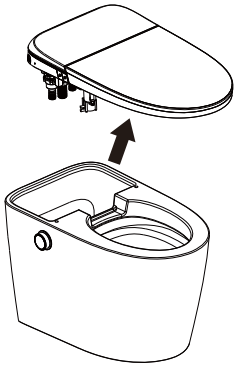

SEALING RING INSTALLATION

Place the sealing ring on to the flange.

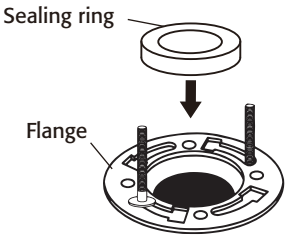

CERAMIC INSTALLATION

Glue the edge of toilet bottom with glass cement. Line up the toilet base over the flage screws. Place the toilet base and secure the flange bolts.
Glue the edge of toilet bottom with glass cement, place the toilet base along the outline and position the toilet base.

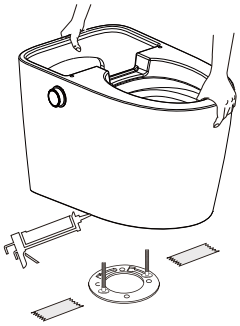

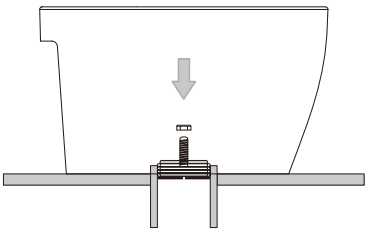

FRONT SEAT INSTALLATION

Attach the connecting pipes and wires of the toilet, adjust the front seat to match the toilet, use the screws to fix the front seat on the toilet. Pay attention to the tightness of the pipes connection.

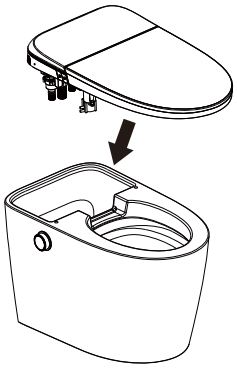

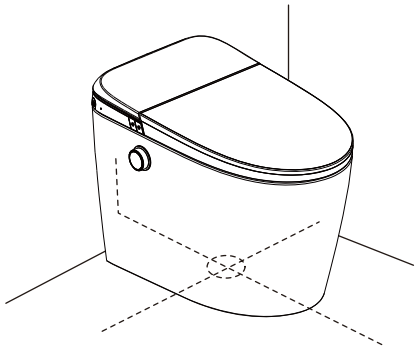

CONNECTION OF WATER INLET VALVE

Connect the water inlet braided pipe to the water inlet angle valve; if the water pressure is high, you can install a flow restrictor or adjust the position of the angle valve to achieve the best flushing effect.

NOTE:

Clean the floor and tools, do not use the toilet immediately, it takes 48 hours to cure and keep the toilet dry.

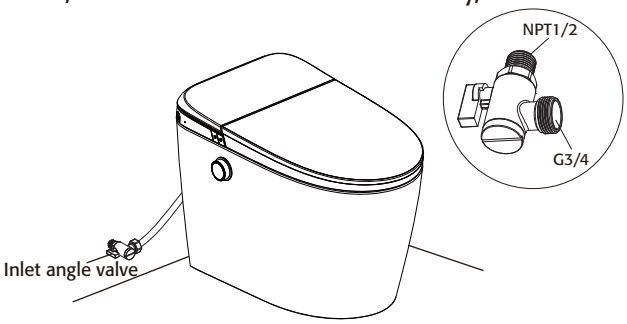

CONNECT TO POWER

Connect the electricity plug with protection unit. Press the power switch, the light turns on, power is on, and hear the buzzer calls.

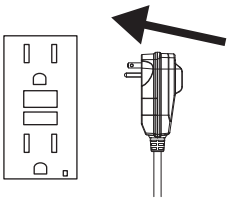

STEP3 | REMOTE CONTROL INSTALLATION

Method 1:

1. Put the double sided tape on the remote control fixed seat.
2. Clean dust, grease, water droplets on the walls and wipe them clean.
3. Press the remote control fixed seat with double sided tape on it. Press it evenly for 3 to 5 minutes. Attach the remote control fixed seat to the wall.

Note: The method is applicable to glazed tiles, glass and smooth wall.

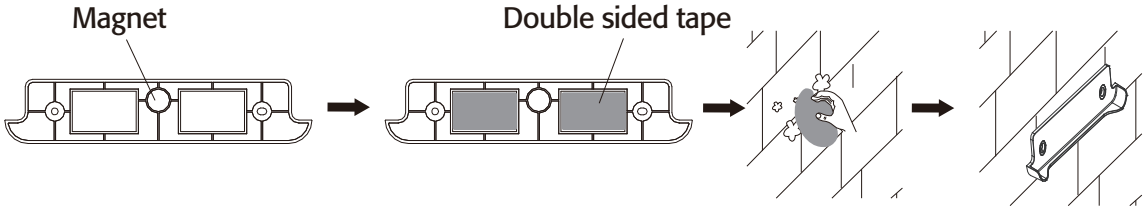

Method 2:

1. Drill two holes on the wall with a distance of 5.51" and a depth of 0.87" by the drill with the diameter of 0.18 in.

NOTE: the position of the hole shall be satisfied for user to get the remote control conveniently when sitting on the seat.

2. After installing, the expansion plug in the wall shall align the fixing hole of the remote control and then lock the bolt.

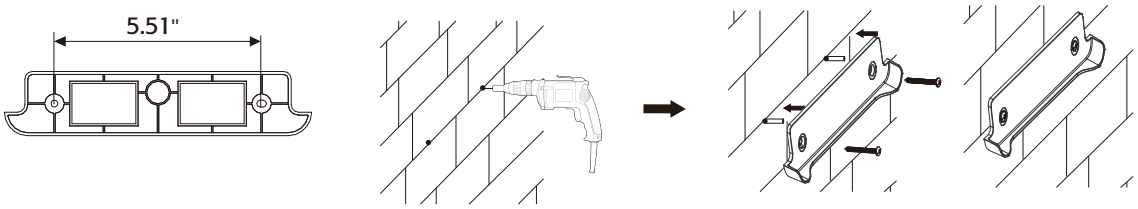

Put the remote control on the fixed base after installing the battery, and the remote control can automatically absorb on the fixed base.

NOTE:

1. Please place the remote control on the fixed place if not use. (To avoid the remote control falling down) It may cause damage if the remote control falls down.
2. Please do not spill water on the remote control or drop into the water, or it may cause damage.

BATTERY INSTALLATION

Install two new AAA batteries(not included) to the remote control.

The battery box is on the back of the remote controller. Push the lid down to open the battery box and install.

NOTE:

1. Clean the battery and battery box contact before installing the battery.
2. If the battery is dead or the product is not used for a long time, please remove the battery.
3. Don't mix old and new batteries.

GUIDELINES FOR FIRST USE

1. Open water value and check if any leaking.
2. Make sure the plug is plugged into the socket and the light on.
   Press "TEST" button: The light of the plug should be off.
   Press "RESET" button: The light of the plug should be on.
   Don't use if "TEST" & "RESET" button fails.
3. When the toilet is powered on, the nozzle extends and reverts, then water will flow out to flush the nozzle It beeps during the initialization.
4. After the user sits on the seat, a small amount of water will flow out to pre-wet the inner surface of the ceramic body.

THE TOILET'S FEATURES WILL NOT WORK UNLESS YOU'RE SITTING ON THE SEAT!

OPERATION INSTRUCTIONS

REMOTE CONTROL

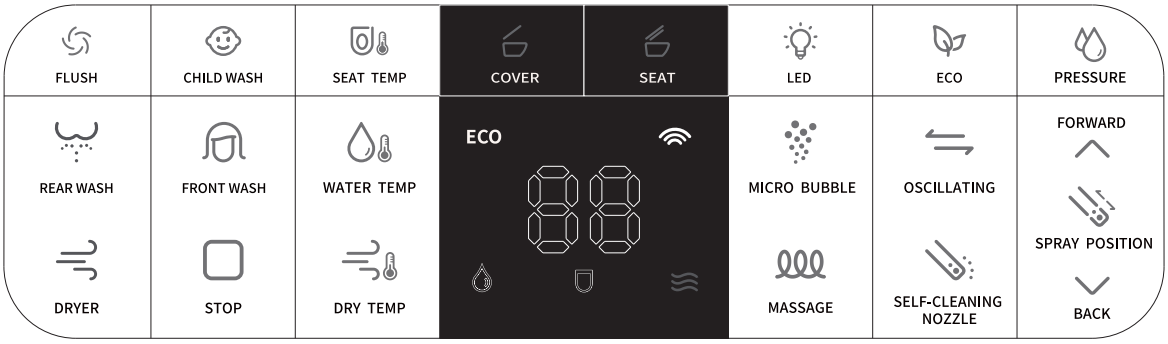

STOP — Press this key will stop cleaning or drying before the automatic stopping.

REAR WASH — This function only works when the user is sitting on the toilet seat. Press this key to extend the nozzle and rinse the buttocks. The rinsing stopped after 2 minutes.

FRONT WASH — This function only works when the user is sitting on the toilet seat. Press this key to extend the nozzle and rinse the front position. The rinsing stopped after 2 minutes.

DRYER — This function only works when the user is sitting on the toilet seat. Press this key to start warm air drying. Press the key again will set 4 air speed during drying, The dryer stopped after 2 minutes.

FLUSH — Short press the key to flush,long press the key to small flush.

CHILD WASH — Press this key to turn on child mode. The users can still turn on the cleaning or dryer functions even the seat sensor does not identify any sitting. Also under child mode, all the functions are under softer condition and users is unable to adjust it to the highest gear. No matter if any operation, it will automatically exit child mode after 5 minutes.

SEAT TEMP — Pressing this key will set 4 temperature for the seat heating. after the user sits for more than 15 minutes, the seat temperature will automatically drop to a lower setting to avoid low temperature burns.

WATER TEMP — Pressing the key will set 4 water temperature for the cleaing.

DRY TEMP — Pressing this key will set 4 dry temperature for the drying.

COVER — Press this key will automatically turn off/turn on the lid.

SEAT — Press this key will automatically turn off/turn on the seat, when the lid is closed,
Press this key will automatically turn on the lid before turn on the seat.

PRESSURE — Press this key to provide 3 cleaning pressure selection during rinsing.

FORWARD

SPRAY POSITION

BACK

Press this key during rinsing to provide 3 cleaning position choices.

ECO

Press this key to turn on/off ECO mode, under ECO mode, seat temperature change to low level, all light will turn off except power indicator light.
NOTE: ECO mode will be suspended when someone sit on the seat.

OSCILLATING

During rear/front wash mode, press this key will turn on/off swinging cleaning.

SELF-CLEANING NOZZLE

This function only works when the user leaves the toilet seat. Press this key, the nozzle will self-cleaning for 20 seconds.

LED

Press this key to turn on/off nightlight function.

MICRO BUBBLE

Press this key to turn on/off micro bubble spray for washing.

MASSAGE

During rear/front wash mode, press this key to turn on/off massage function.

COMBINATION FUNCTION KEYS

STOP + COVER(Automatic lid closing):
Press and hold for 5 seconds to turn on/off the automatic lid closing function.
STOP + SEAT:
Press and hold for 5 seconds to turn on/off the seat automatic closing function.
STOP + OSCILLATING(Auto open sensing):
Press and hold for 5 seconds to turn on/off auto open sensing function.
REAR + DRYER(Buzzer):
Press and hold for 5 seconds to turn on/off buzzer.
REAR + COVER(Adjust open sensing distance):
Long press for 5 seconds on condition of non-sitting to adjust the auto open sensing distance, There are 3 levels of detection from auto open sensing distance adjustment at about 24, 35 and 47 inches from sensor. one beep for the first gear, two beeps for the second gear, three beeps for the third gear.
STOP + SELF-CLEANING NOZZLE(Nozzle clean):
Press and hold for 5 seconds to extend the nozzle for cleaning, you can use brush to clean the nozzle. Press “STOP“ key to retract the nozzle.
STOP + FLUSH(Auto flush)
Press and hold for 5 seconds to turn on/off auto flush function, If this function is on, the toilet will flush when user leave the toilet after use.

REMOTE CONTROL MATCHING

The remote control and toilet are already factory-matched. If needed to match again, please read following information.
After the product is connected to the power supply, the remote control matching operation can be carried out within 1 minute from the buzzer call.
Within 1 minute after powering on and self checking, press "FRONT+DRYER" button for 3 seconds, remote control screen will display a code of 28, then press "WATER TEMP" button to adjust code from 21 to 29, select the requird code and press "STOP" button, buzzer calls, matching is successful.

OPERATION INSTRUCTIONS

TOILET BODY CONTROL

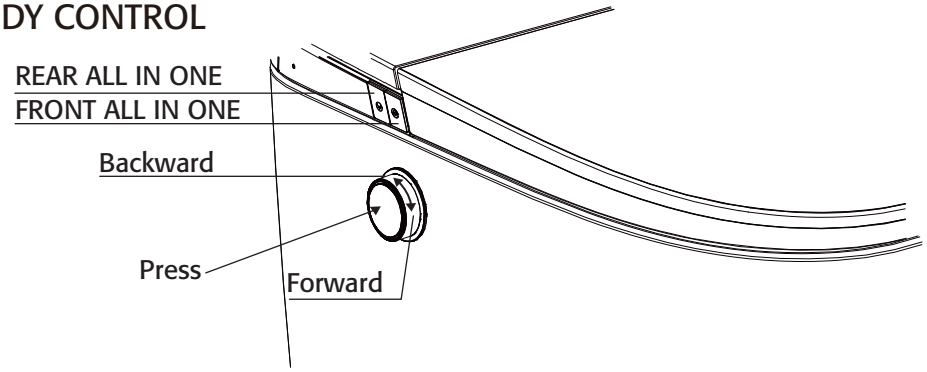

1. When the user isn't sitting on the toilet seat, the washing/drying function will not work.
2. When the user is sitting on the toilet seat, turn the dial foward to start front washing; turn the dial backward to start rear washing. During washing, turn the dial to adjust nozzle function.
   The rinsing will stopped after 2 minutes.
3. When the user is sitting on the toilet seat and without any function working, long press the dial for 2 seconds to start drying, the drying will stopped after 2 minutes.
4. Press the dial to stop the washing or drying function.
5. Without any function working, press the dial to flush.
6. When the user is sitting on the toilet seat, press the "REAR ALL IN ONE"/"FRONT ALL IN ONE" key to perform automatic rear/front wash, then auto flush and dry after washing.
7. When the user isn't sitting on the toilet seat, long press the dial for 5 seconds to turn on/off the indicator light of the dial.

FOOT SENSING

When the lid and seat are closed, short touch the sensing area, the lid automatically open; long touch the sensing area, the lid and seat automatically open.
When the lid open, seat closed, short touch the sensing area, the seat automatically open.
When the lid and seat are open, short touch the sensing area to start the flushing function, then the lid automatically close.

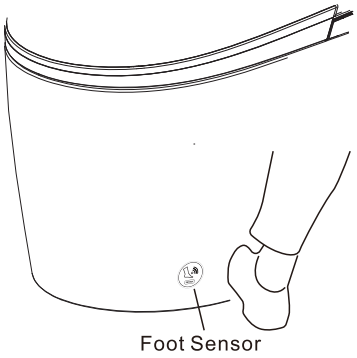

NOZZLE STERILIZATION FUNCTION

After cleaning and leaving the seat, the nozzle will automatically perform a deep ultraviolet sterilization for two minutes.

AUTO OPEN/CLOSE LID&SEAT

The lid automatically open when user move close to the toilet.
And the lid and seat automatically close when user leave the toilet for 90 seconds later.

CLEANING & MAINTENANCE

CLEAN THE FILTER SCREEN

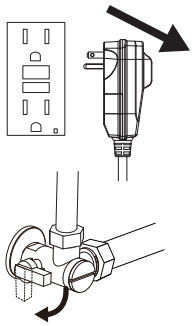

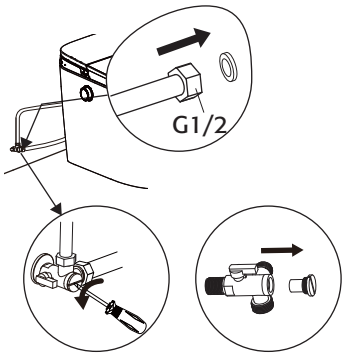

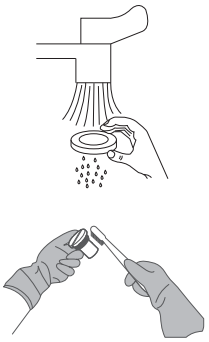

1.Unplug the product. Shutoff water supply.

2. Remove the water-inflow filter from the inlet hose.
3. Take out the filter by using a flat-blade screwdriver to unscrew the filter.

4. Remove the filter screen and rinse it with clean water.
5. Install the filter screen as it is, be sure to tighten it, otherwise it will cause water leakage.

CLEANING OF TOILET BOWL

Unplug the product. Wipe the outer surface of the toilet with a wet cloth.
NOTE: Dirt should be treated as soon as possible.

NOZZLE CLEANING AND MAINTENACE

When no people sitting on the toilet, press “STOP + SELF-CLEANNING” on remote control for 5 seconds, then you can use a brush to clean, press “STOP“ to retract nozzle.
NOTE: Do not use a stell brush for cleaning.

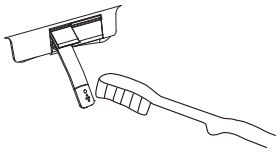

WARNING

1. ANZZI is not responsible for any damage caused by the use of detergents containing chlorine (calcium hypochlorite).
2. Always unplug before cleaning.

ATTENTION

1. Always TEST your detergent in an inconspicuous area before applying it to the entire prodct surface.
2. Wipe and rinse the surface with water immeidately after applying detergent. Rinse and dry the excessive spraying on surfaces.
3. Do not soak the surface with detergent.
4. Use a soft, wet sponge or cloth. Do not clean the surface with abrasive materials, such as burshes or scouring pads.

LONG-TERM PRESERVATION

When you leave for a long time and not using this toilet, such as on business or travel:
1. Close the supply stop. Press the control dial to drain out the cavity.
2. Unplug the plug of smart toilet.

HOW TO FLUSH DURING POWER INTERRUPTION

When the power interrupted, connect to the USB Port with a battery box(included) or mobile power supply to achieve the power off flushing.

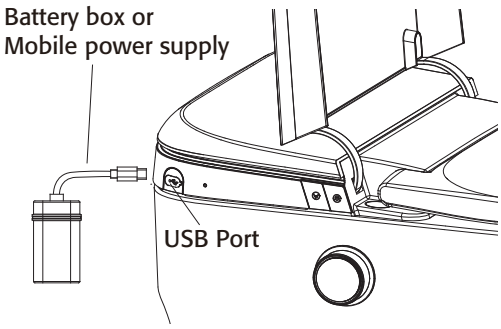

Use battery box:

1. Remove the battery box cover, insert four AA battries(not included) in the correct direction into the battery box according to the installation diagram, then install the battery box cover.
2. Open the USB rubber cover on the toilet and insert the plug on the battery box into the USB port.
3. Press the “FLUSH” on toilet, the flushing function can be used normally.

Use mobile power supply:

NOTICE: Use A-C cable only. Not compatible with C-C cable.

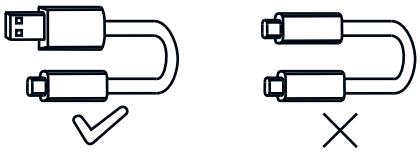

1. Connect power cable to mobile power supply.
2. Open the USB rubber cover on the toilet and insert the TYPE-C plug into the USB port.
3. Press the “FLUSH” on toilet, the flushing function can be used normally.

WHEN THE TOILET CAN'T BE FLUSHED DUE TO WATER INTERRUPTION.

1. Flush away the sewage in the toilet by a special basin for taking in water.
2. After water flushing, water level is lowered and water is added to avoid stink.

NOTICE: When the toilet can't be flushed automatically due to water interruption. After long term idle condition, make sure to wash it for several times and the inner pipelines are cleaned before use.

PRODUCT SPECIFICATIONS

Rated voltage			100-130V~ 50/60Hz			
Power cord length			48" (1.2m)			
Cleaning	Water volume	Rear wash	0.13 gal (0.5L)-0.18 gal(0.7L)/min (water pressure 0.2MPa, 3 levels adjustment)			
		Front wash				
	Swing		Oscillating cleaning forward and backward			
	Massage		interval cleaning			
	Water volume /nozzle position		3 levels adjustment			
	Water temperature range		About 68°F-107°F (4 levels adjustment)			
	Safety device		Temperature limit circuit, thermostat, thermal fuse			
Drying	Warm wind temperature		About 89°F-134°F (3 levels adjustment)			
	Safety device		Bimetallic thermostat, thermal fuse			
Seat	Surface temperature		4 levels adjustment, room temperature about 107°F			
	Safety device		Thermal fuse			
Self-cleaning	Antibacterial seat/nozzle		Antibacterial material/stainless steel nozzle			
	Automatic nozzle cleaning		Self-cleaning			
	Pre-wetting		Spray a circle of water after sitting			
	Sterilization		Nozzle/Ceramic			
Deodorization method	Activated carbon deodorant		Auto open/close lid/seat	Remote control, foot sensing, Automatic induction		
Toilet	Flush consumption		1.28 gpf / 4.8 Lpf			
	Flushing mode		Siphon jet			
	Rough-in		12.0"(305mm)			
Rated power	1100W		Maximum power	1600W	Waterproof level	IPX4
Water supply temperature	39°F-95°F		Ambient temperature	37°F-104°F	Net weight	82.2 lb (37.3kg)
Dimension	27" * 15.3" * 18.4" (687 * 389 * 468 mm)		Water supply pressure	Dynamic pressure150 kpa Flow rate 20 L/min		

THE TOILET'S FEATURES WILL NOT WORK UNLESS YOU'RE SITTING ON THE SEAT!

TROUBLE SHOOTING

SYMPTOMS	POSSIBLE CAUSES	RECOMMENDED ACTIONS
The product out of work	Whether the power supply is plugged in.	Insert the plug or detect the power socket.
	Power failure.	Wait until the power is restored.
	The leakage protector is disconnected.	Insert the plug the power socket, press reset button on the plug.
➤ Rear cleaning ➤ Front cleaning ➤ Dry The toilet does not work normally even when the button is pressed.	The wand extends but water does not come out. The cleaning water pressure is weak.	Has a water failure occurred? Press the "stop"button and wait until the water failure is over.
		Is the water supply valve close ? turn on the tee valve.
		Is the water filter drain valve clogged with foreign matter? Clean or replace the filter.
	Low water temperature setting	Use the water temperature keys on the remote control to adjust the cleaning water temperature.
	The seat sensor may have difficulty detecting some sitting posture.	Sit back on the toilet seat.
The nozzle stops cleaning suddenly.	If the user moves too fast or leaves the seat, the seat sensor cannot detect in short time.	Sit back on the seat sensor detection position,then start function again.
Low water pressure when rear/front wash.	Filtration screen of inlet angle valve may be blocked	Clean or replace the filter.
	The water-inflow hose may leakage	Check the hose and tighten it.
Deodorization effect is not obvious.	The seat sensor does not sense someone sitting (no deodorizing sound)	Sit back on the seat sensor detection position.
	Activated carbon fiter block or spacer may be blocked.	Remove the deodorizing window to clean or replace the activated carbon filter.
Deodorant function continues to work after user leaves.	The deodorant function will be continue to work for 20 seconds in order to remove the residual odor after the use leaves.	It's common phenomenon.
Water comes out unexpectedly from the wand.	Abnormal operation	Disconnect the power plug and wait about 1 minutes before inserting it again.
Water comes out unexpectedly from the inlet hose.	the inlet hose may damage	Replace the inlet hose.
The toilet seat does not get warm.	The seat sensor may have difficulty detecting some sitting postures.	Sit back on the toilet seat.
	The toilet seat temperature set a low level.	Use the remote control to adjust seat temperature.

SYMPTOMS	POSSIBLE CAUSES	RECOMMENDED ACTIONS
The dry temperature is not enough.	Lower dry temperature is set.	Use the remote control to adjust dry temperature.
The toilet does not flush when the button is pressed.	Water is not available from the water supply.	Use a bucket full of water to flush.
	The water supply valve is not fully open.	Check the valve.
Waste material does not flush down completely.	The water supply valve is not fully open.	Check the valve.
	The water filter is clogged.	Clean the filter.
	The water supply to the toilet may disrupted by other running water fixtures.	Cease using other fixtures and then flush the toilet.
	Flushing may be difficult due to the consistency of the waste material.	Flush the toilet again. If the bowl is not cleaned with a flushing remove the stains with a brush or similar instrument.
There is residue on the bowl unit surface.	Oil and other hard-to -see grime may stick to the bowl unit surface.	Clean the bowl with a non-abrasive toilet detergent.
The toilet does not flush when water pressure is normal.	Flushing valve failure.	Please professional maintenance personnel should be checked and maintained.
The remote control fail to control the toilet.	Lower battery	Replace with new batteries.
	Battery polarties are mounted reversely.	Reinstall properly.
	The remote control is too far from the toilet.	Get close to the toilet.
	The remote control transmitter or the top unit receiver may be blocked.	Remove obstructions,dirt,water droplets or any other blockages.
Insufficient LED brightness	The indoor light is too bright.	Please turn off the indoor light and close the curtain.
The top unit is unstable.	There is clearance between the toilet seat cushion and the bowl.	It's common phenomenon.
Water is leaking from the plumbing connections	nuts in a connection are loose.	Tighten them witn a tool such as monkey wrench.
	The water leak does not stop.	Close the water supply valve and seek repair.
A strange sound tis emitted from the top unit.	when user sit on the toilet seat,the seat switch turns on.a click sound is heard.	It's common phenomenon.

NOTE: This equipment has been tested and found to comply with the limits for a Class B digital device, pursuant to Part 15 of the FCC Rules. These limits are designed to provide reasonable protection against harmful interference in a residential installation. This equipment generates uses and can radiate radio frequency energy and, if not installed and used in accordance with the instructions, may cause harmful interference to radio communications.

However, there is no guarantee that interference will not occur in a particular installation. If this equipment does cause harmful interference to radio or television reception, which can be determined by turning the equipment off and on, the user is encouraged to try to correct the interference by one or more of the following measures:

- Reorient or relocate the receiving antenna.
- Increase the separation between the equipment and receiver.
- Connect the equipment into an outlet on a circuit different from that to which the receiver is connected.
- Consult the dealer or an experienced radio/TV technician for help.

ENVO

by ANZZI