BUILDING BLOCK

REMOTE & APP CONTROL

操作指南

OPERATION GUIDE

接轨全球热门少儿编程教育内容,衔接小学教育,通过个性化编程任务让学习变得有趣。实现可视化编程效果,让孩子爱上编程。多模式并行,快速连接,趣味图形编程，实时指令控制,玩出无限创造力。

In line with the world's popular children's programming education content, it connects with primary school education and makes learning fun through personalized programming tasks.Achieve visual programming effects and make children fall in love with programming. Multi-mode parallelism, fast connection, interesting graphics programming, real-time command control, and unlimited creativity.

遥控模式
★ Remote Control Pattern

编程模式
★ Programming Model

积木搭建
★ building blocks

● APP Installation | 安装APP：

本产品需要搭配您的手机或平板使用
This product needs to be used with your mobile phone or tablet

APP Store

Android App Store
安卓应用商店

Power Box

扫一扫安装二维码
Scan QR code

安装“Power Box”的推荐配置

支持IOS10.0及以上版本系统的平板和手机:
支持iphone6及以上设备屏幕尺寸:4.7及以上;支持ipad及以上设备:
Supports mobile phones and tablets of IOS 10.0 and above, supports devices of iPhone 6 and above, screen size 4.7 and above, and supports devices of iPad and above.

支持Android8.0及以上版本系统的平板和手机:
屏幕尺寸:4.7及以上;前置摄像头:像素500万及以上;
Support Android 8.0 and above version of the system's tablet and mobile phone;
Screen size： 4.7 or more； front-end camera；5 million or more pixels;

注意:此说明书含有重要信息,请妥善保留,安装需要一些时间,请耐心等待。
Note: The instructions contain important information, Please keep it properly. It will take some time for installation. Please wait patiently.

● Activation code | 激活码:

首次使用，请打开APP，观看一段小动画后进入主页
For first time use, please open the APP, watch a short animation and then enter the home page.

打开APP，进入主页，会出现“Power Box”图标
Open the APP, enter the homepage, and the "Power Box" icon will appear.

注意:需要在联网状态下激活，建议在WiFi环境下使用
Note: It needs to be activated while connected to the Internet. It is recommended to use it in a WiFi environment.

● Chinese-English switching | 中英切换步骤:

1.请打开“Power Box”APP，进入主页

1.Please open the “Power Box” APP and enter the homepage

点击切换成中文

主页右上角有 中英切换图标

There is a Chinese-English switching icon in the upper right corner of the homepage

● Control Function | 控制功能:

1.右滑界面，展示更多

1.Swipe right on the interface to show more

2.进入功能选择界面，点击Remote图标，进入控制功能界面

2. Enter the function selection interface, click on the Remote icon, enter the control function interface

3.点击遥控界面WIFI按钮 ，连接成功时WIFI按钮会变成蓝色 。

3. Click the WIFI button on the remote control interface. The WIFI button will turn blue when the connection is successful.

4. 点击方向操作盘，对主控进行控制。

4. Click the steering wheel to control the main control.

5.点击切换电机方向按钮 ，对电机控制方向进行切换 前后控制切换 。

5. Click the switch motor direction button，Switch the motor control direction.

6.点击切换操作盘方向按钮 ，切换左右操作盘。

6. Click the switch operation wheel direction button，Switch the left and right operation panels.

7.点击转换模式 。

7. Click Convert Mode .

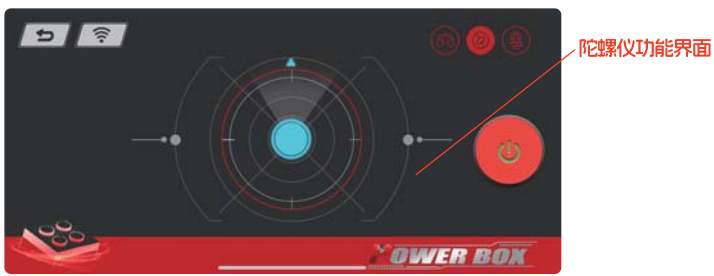

Other interfaces | 其他界面：

Programming function | 编程功能：

1.进入功能选择界面，点击Program图标，进入编程功能界面

1. Enter the function selection interface and click the Program icon to enter the programming function interface.

2.进入编程列表界面，点击添加编程，进入编程界面。

2. Enter the programming list interface, click Add Programming, and enter the programming interface.

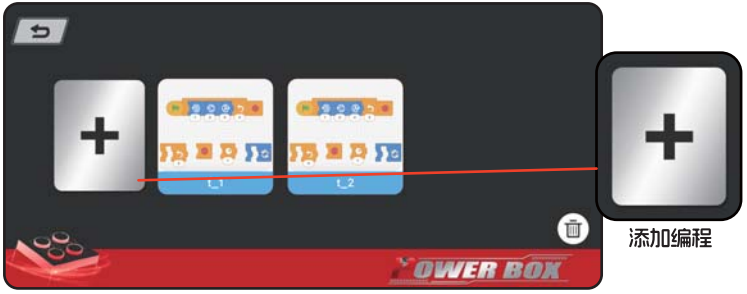

3.拖动编程模块，组合编程内容，电机运行按钮 ，执行编程。

3. Drag the programming module, combine the programming content, and the motor run button to execute programming.

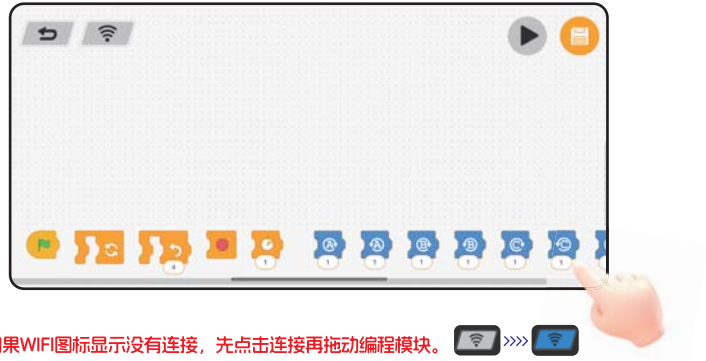

如果WIFI图标显示没有连接，先点击连接再拖动编程模块。 >>>>

If the WIFI icon shows no connection, click Connect first and then drag the programming module.

Product Summary | 产品概览：

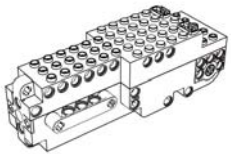

主控模块
Smart Creative Module

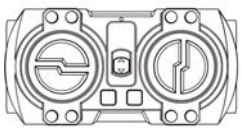

遥控器
Remote Control

USB充电线
USB Charging Cable

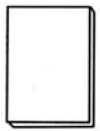

搭建手册
Building Blocks Instructions

积木零件包
Building Block Parts

Smart creative module | 主控模块：

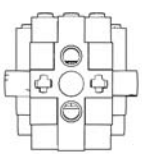

正面
Front View

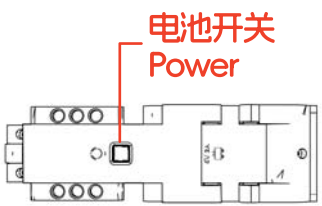

底面
Bottom View

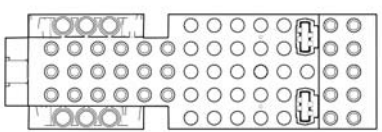

顶面
Vertical View

Smart creative module | 主控模块：

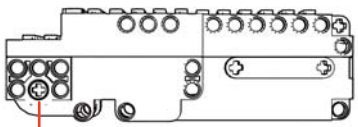

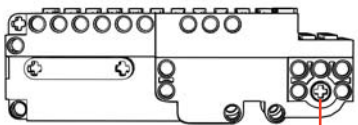

动力孔A
Rotary360° A

侧面
Side View

动力孔B
Rotary360° B

立体图
Stereogram

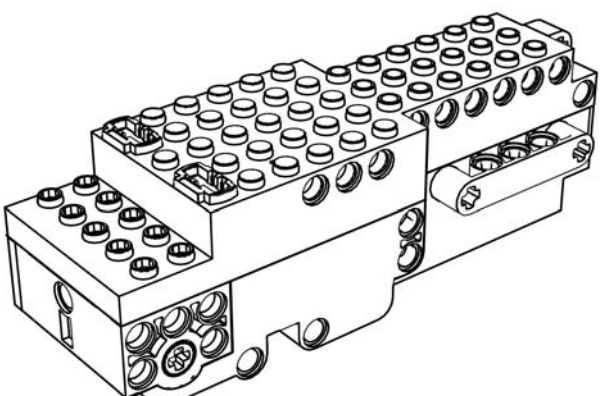

Remote Control/Voice remote control ｜遥控器/语音遥控器：

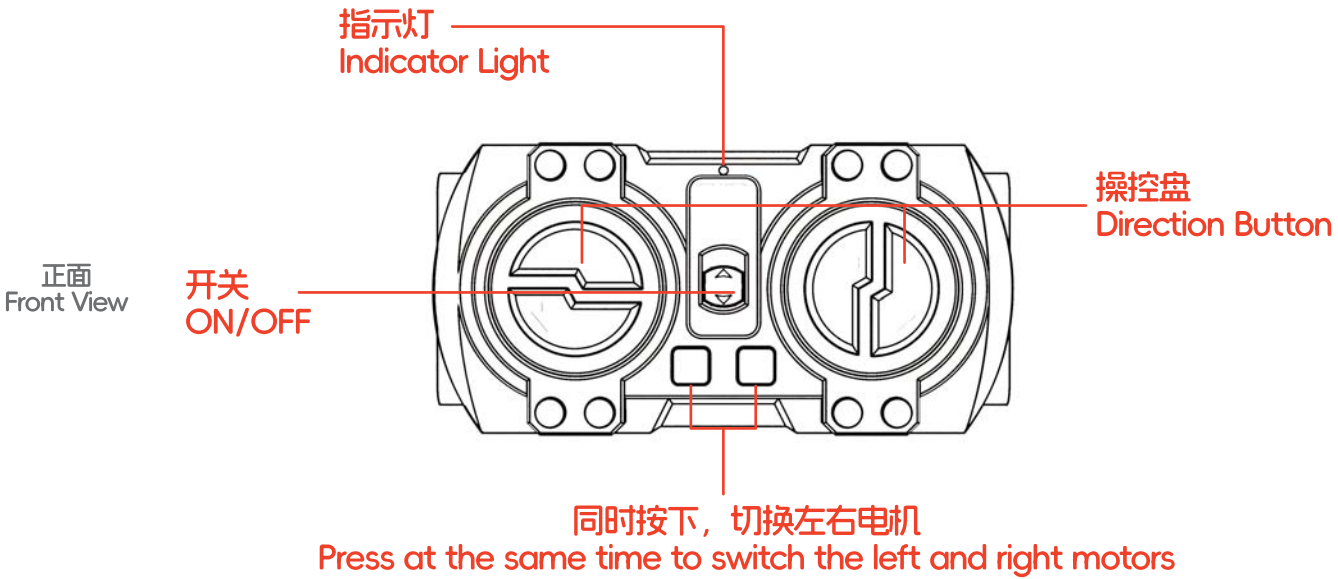

Remote Control/Voice remote control ｜遥控器/语音遥控器：

立体图
Stereogram

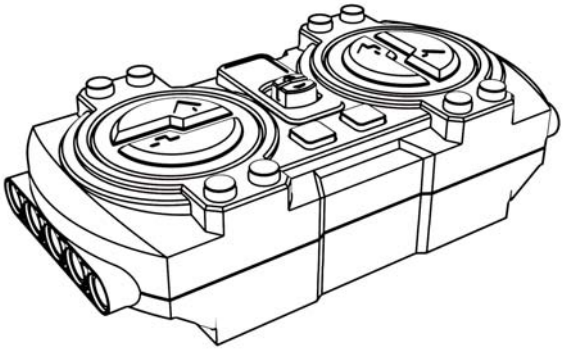

背面
Back View

电池仓
Battery
Case

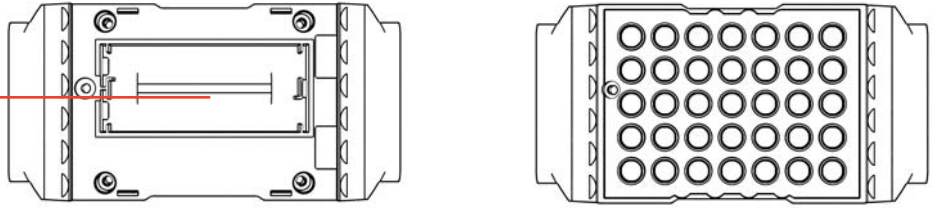

Method Of Operation | 操作方法：

ON/OFF 开关机

打开电源开关键,启动时指示灯亮。
Turn on the power switch and indicator lights when staring.
注 意:
主控模块使用后关闭电源，请勿长时间待机,在待机24小时之后启动电池保护,停止主控模块工作。重新启动需要对主控模块进行充电操作，才能恢复正常工作
NOTE：
Please turn off the power and use it outside It is forbidden to work for a long time .It will stop when working state is longer than 24 hours.You need to charge the Smart creative module.

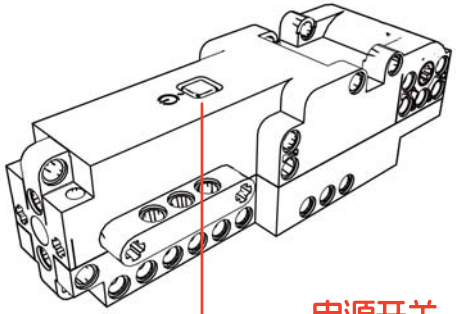

Remote Control Operationl | 遥控操作：

使用前请按正确方式安装电池，安装后打开开关，指示灯长亮链接成功。(AAA电池2节)
Remote control operation install the battry before using it,turn on the switch, the indicator light is on, and the link is successful.
(AAA Battery 2)
遥控器控键控制前、后、左、右方向。
Direction button control :Front /back/left/right

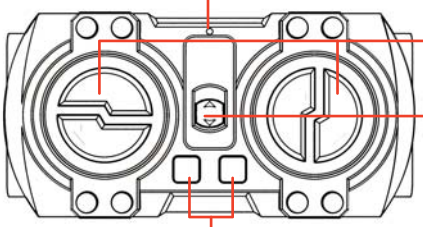

Link Operation | 连接操作：

首先打开主控模块开关，再安装遥控器手柄电池，打开遥控器开关，当遥控器指示灯亮时，链接成功。
First turn on the main control module switch,then install the remote control battery, turn on the switch, when the indicator light is on,the link is successful.

注意:
如长时间没使用产品，建议重新安装遥控器电池。
NOTE：
If the power is not turned on for a long time ,repeat the installation of the remote battery connection.

Charging Operation | 充电操作：

Micro接头连接主控模块充电口，USB连接电脑端接口，
充电时主控模块指示灯为红色，充电完成后指示灯熄灭;
充电时间大约100分钟;充电完成后请拔出接头。

Use usb charing.Connect the main smart creative module and the computer usb port,When charing the light is red, after charging, light goes out.
The charing time is 100 minutes.Please unplug the connector after charing.

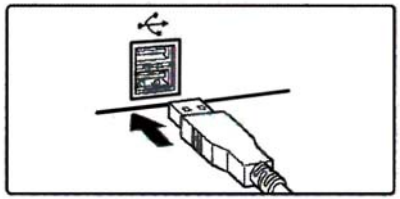

注意:
USB充电接口输入电压不能超过5V,电流不能超过1A
NOTE:
The charing input voltage should not exceed 5V and current should not exceed 1A.

NOTE | 注意事项

主控模块不可拆卸,不得使产品受到机械冲击;
主控模块包含电池,远离热源、火源以及高于60°的场所;
主控模块不能长时间充电，以免发生危险;
专用USB充电线为电子元件,不可以拿来玩耍;
本产品含有细小零件,禁止3岁以下儿童使用,以免发生窒息危险;
Precautions Smart creative module is not removable and must not subject the product to mechanical shock;
Smart creative module contains batteries,away from heat sources and locations above 60℃;
Smart creative module cannot be charged for a long time to avoid danger;
The USB charging cable is an electronic component and cannot be used for play;
This product contains small parts and is prohibied for use by children under the age of three to avoid the risk of suffocation.
遥控器功能按键随产品系列不同有所差异。
The remote control function keys vary with the product series.

BUILDING BLOCK

REMOTE & APP CONTROL

更多创意造型等你来DIY...

More creative styles are waiting for you to DIY...

This device complies with part 15 of the FCC Rules. Operation is subject to the following two conditions: (1) this device may not cause harmful interference, and (2) this device must accept any interference received, including interference that may cause undesired operation.

Any changes or modifications not expressly approved by the party responsible for compliance could void the user's authority to operate the equipment.

NOTE: This equipment has been tested and found to comply with the limits for a Class B digital device, pursuant to Part 15 of the FCC Rules. These limits are designed to provide reasonable protection against harmful interference in a residential installation. This equipment generates, uses and can radiate radio frequency energy and, if not installed and used in accordance with the instructions, may cause harmful interference to radio communications. However, there is no guarantee that interference will not occur in a particular installation.

If this equipment does cause harmful interference to radio or television reception,
which can be determined by turning the equipment off and on, the user is encouraged to try to correct the interference by one or more of the following measures:

-- Reorient or relocate the receiving antenna.

-- Increase the separation between the equipment and receiver.

-- Connect the equipment into an outlet on a circuit different from that to which the receiver is connected.

-- Consult the dealer or an experienced radio/TV technician for help.

The device has been evaluated to meet general RF exposure requirement. The device can be used in portable exposure condition without restriction