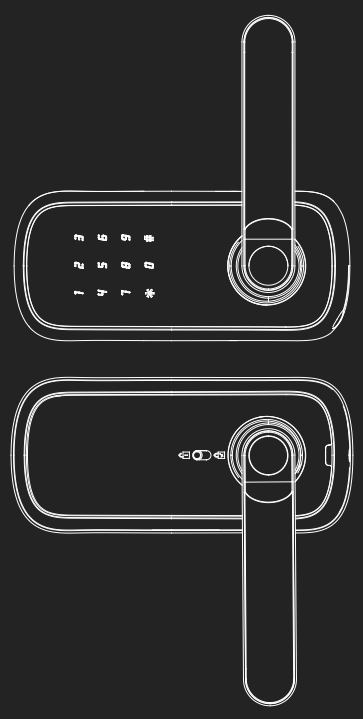

Installation & Operation Guide

This guide contains important information about your lock.
Please keep this guide

Overall

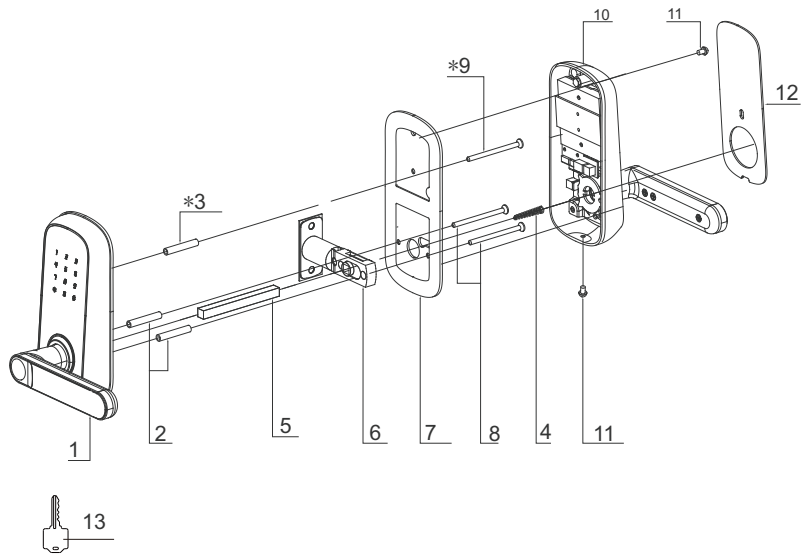

1. Exterior Assembly
2. Screw Posts
3. Reinforcement screws
4. Spindle spring
5. Square Bar
6. Latch
7. Mounting Plate
8. Screw
9. Screw
10. Interior Assembly
11. Screw
12. Battery Cover
13. Spare Key

Restore to Factory Default Settings

The default Master Code is 123456.It is required that you change it to a code of your own before programming.
1.Open and unlock the door.
2.Find a paper clip, put it into the hole at the bottom, long press for 5 seconds until the lock voice prompts “Please enter the password 000 #”

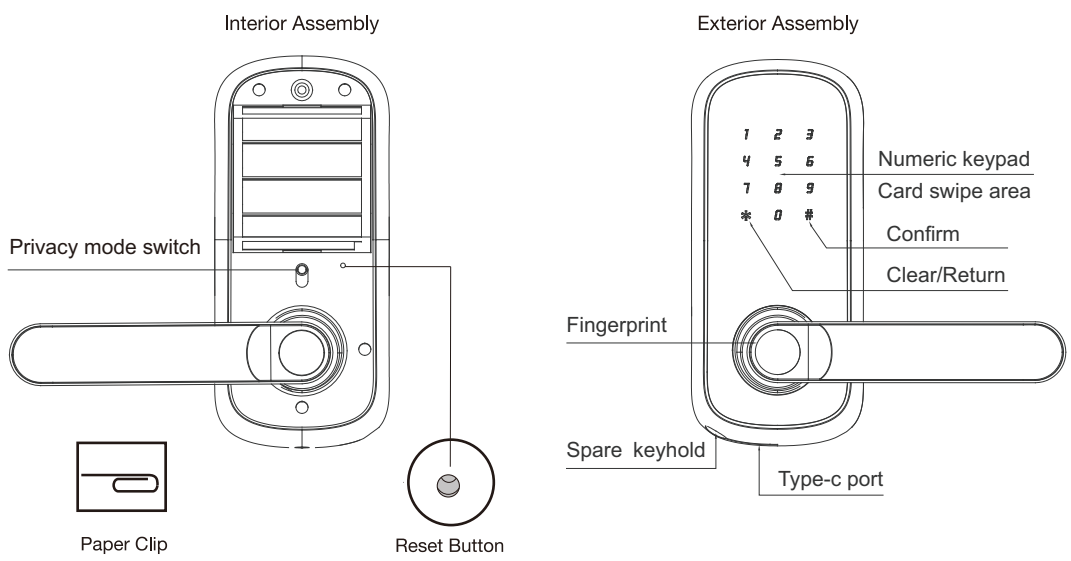

⚠ The lock has been reset successfully. All entered information has been deleted.

Ajustable Latch Backset

1.TO CONVERT BACKSET FROM 2-3/8" (60mm) TO 2-3/4" (70mm)

2.TO CONVERT BACKSET FROM 2-3/4" (70mm) TO 2-3/8" (60mm)

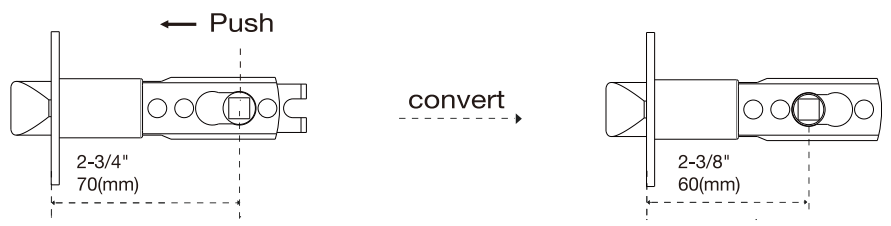

Installation Guide

1 PREPARE THE DOOR AND CHECK DIMENSIONS (with the TEMPLATE)

A Measure to confirm the size of hole in the door frame. The wide is 1"(25mm), the length is 1-3 /8"(35 mm), the depth is 1" (25mm).

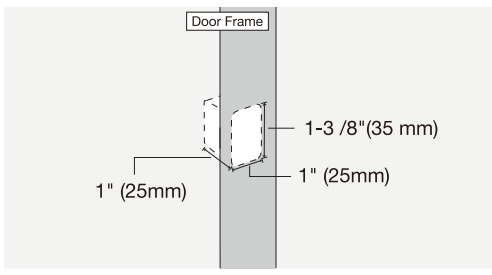

B Measure to confirm the thickness of door is 1- 1/ 4" to 2" (30mm-50mm), the latch hole in the is 1" (25mm).

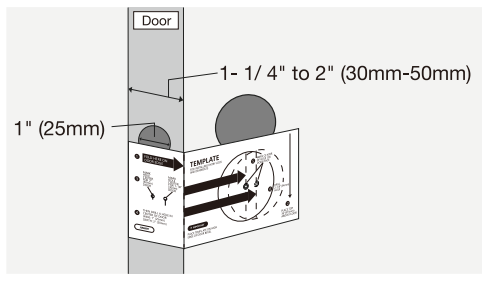

C Measure to confirm the backset is 2-3/8"or 2-3/4" (60mm or 70mm). And adjust the length of the latch backset accordingly.

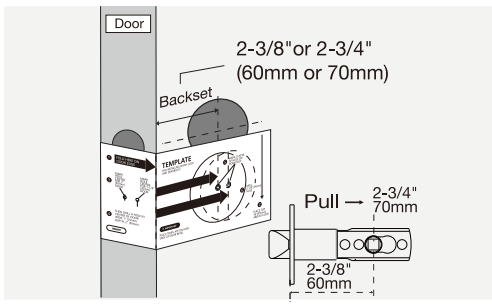

D Measure to confirm the size of hole in the door is 2-1/8" (54mm).

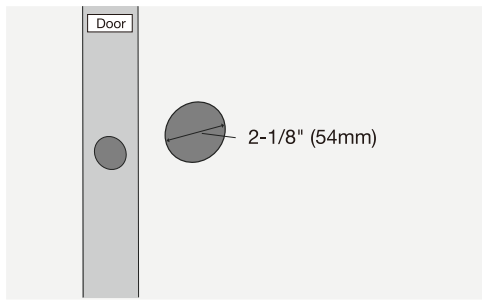

2 INSTALL THE LATCH AND STRIKE PLATE

A Install strike plate and strike box in the door frame with two screws provided.

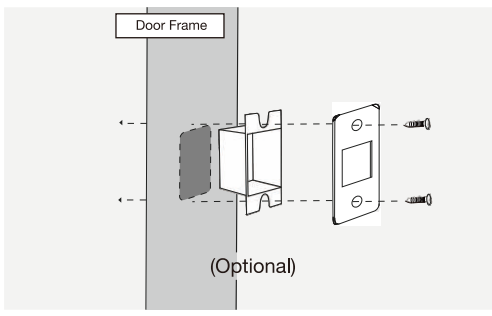

B Insert latch into hole in side of door with the word UP” up, and fastern two screws on the latch into door with two screws .

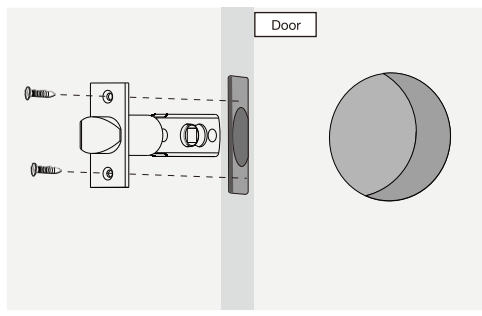

3 ADJUST HANDLE ACCORDING TO THE DOOR OPENING DIRECTION

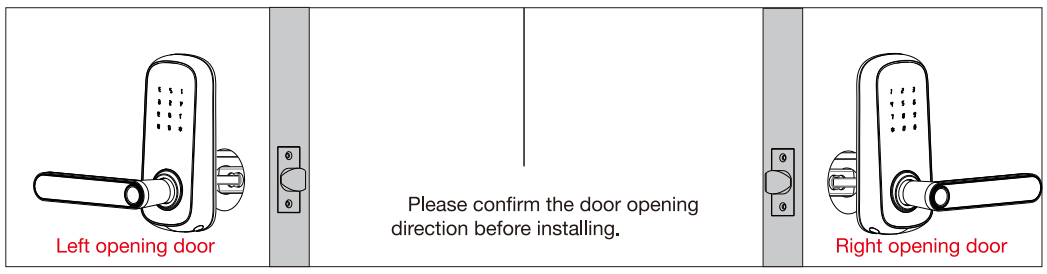

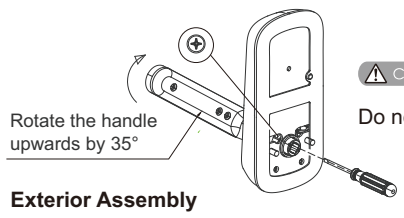

CAUTION

Do not remove the reversing screw.

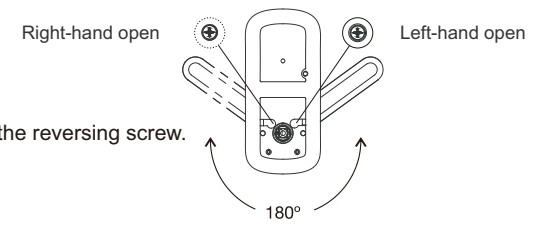

Exterior Assembly

1. Rotate the handle upwards by 35 °, then loosen the reversing screw.
2. Rotate the handle downward.
3. Hold the handle upward at 35° and tighten the reversing screw.

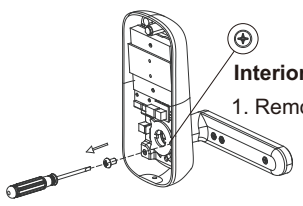

Interior Assembly

1. Remove the reversing screw.

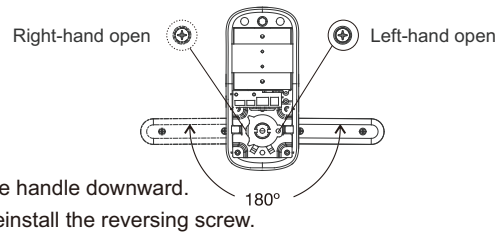

2. Turn the handle downward.
3. Then reinstall the reversing screw.

4 INSTALL THE SCREW POSTS AND EXTERIOR ASSEMBLY

⚠ **IMPORTANT:** Please make sure the arrow on the Exterior Assembly is pointing up.

A Insert the screw posts into the stud and tighten it.

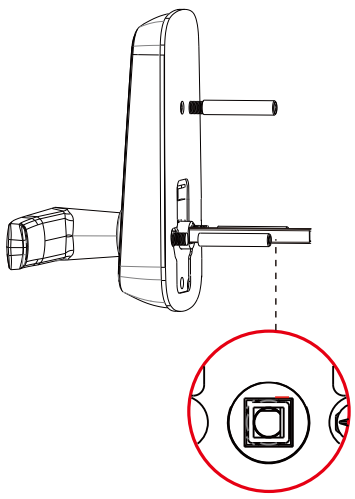

Make sure the square bar is not skewed.

B Install the Exterior Assembly

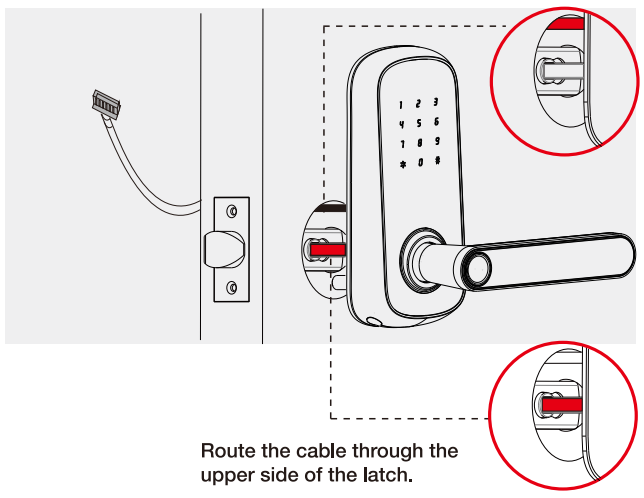

Route the cable through the upper side of the latch.

Pass the square bar through the square hole of the latch. and push the keypad onto the door.

5 INSTALL THE INTERIOR ASSEMBLY AND BATTERY COVER

A Route cable through the mounting plate, and Tighten screws evenly.

⚠ **IMPORTANT:** the cable go through the square hole

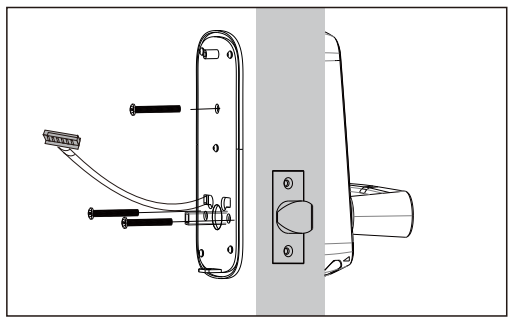

B Connect cables to the interior Connect cables to the interior

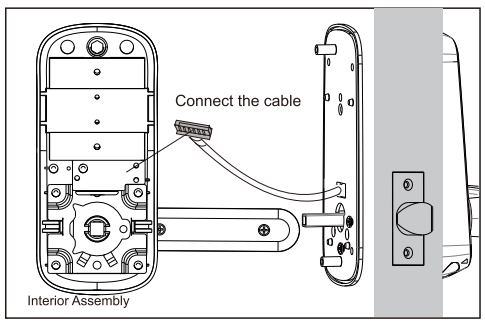

C Snap the interior assembly to the mounting plate and tighten the screws

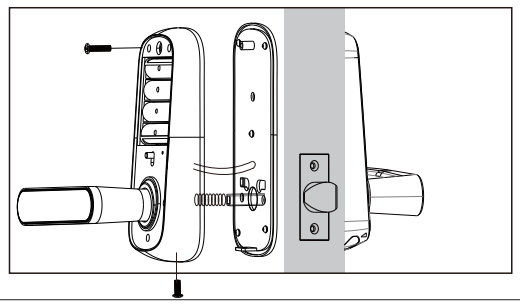

B Insert 4 AA batteries and close the cover

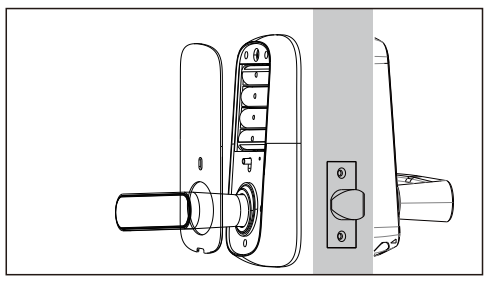

Quick Set Up

⚠ The factory status of the product is in experience mode, and the lock can be unlocked without verifying the master info. Please set your master info as soon as possible.

1.THE "*"KEY
To clear the key/back key, when entering the password, click to clear the previous input .

2.THE "#"KEY
Confirm key or enter menu function key, press it as the doorbell when there is no input.

3.MASTER INFO
The administrator's fingerprint, password, or IC card. Required for programming and feature settings. It can also be used to unlock.

4.USERS INFO
Fingerprints, passwords, and IC cards of non administrators. Can only be used for unlocking.

5.ANTI-PEEPING FUNCTION
When unlocking with a password, User can prevent pin code exposure to strangers by entering random digits before and after the pin code.

291 316874 673
Random digits — password — Random digits

6.When you enter the wrong button, you can press * clear it. If you do not enter any buttons within 10 seconds, the system will exit the programming mode, and you can attempt programming procedure again.

Register Master Code
Touch to light up keyboard Press * # → Input new code 6-8 Digit Press # → Repeat the input Same as before Press # → Can be continuously added user info Press * to exit

⚠ The default value is None. The new master code must be 6-8 digits.

Add User Code
* # +Master Code # → Input new user code 6-8 Digit Press # → Repeat the input Same as before Press # → Can be continuously added user info Press * to exit

⚠ The new user code must be 6-8 digits.

Add User Fingerprint
* # +Master Code # → Press the fingerprint sensor Leave the sensor → Repeatedly press/leave the sensor The system prompts that the operation was successful → Can be continuously added user info Press * to exit

⚠ Press the sensor each time you change your finger angle for better results.

Add User IC card
* # +Master Code # → Place the IC card close to the sensing area The system prompts that the operation was successful → Can be continuously added user info Press * to exit

Corridor mode
Input valid unlock information unlock → Before the keyboard goes out Press 2 8 → When the Corridor mode is turned on It will remain unlocked until the correct unlocking information is input again.

⚠ When the passage mode is turned on, it will remain unlocked until the correct unlocking information is input again.

TUYA App Setup

tuya Smart Home Platform

The lock supports TUYA BLE protocol,you can manage your lock by connecting TUYA APP. Search "TUYA" in the app market or scan the code to get the APP:

How to connect the app

Download and install the TUYA APP, register and log in

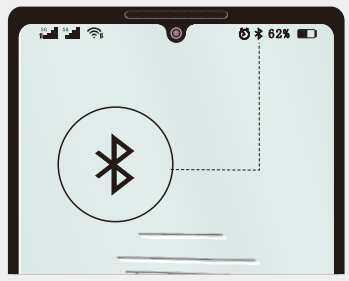

Important:
Make sure your phone's Bluetooth is enabled.

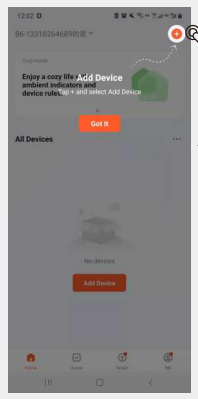

Step 1
Open TUYA APP, click to add device

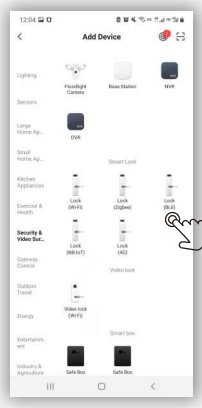

Step 2
Choose Security & Surveillance -Lock(BLE)

Step 3
Click on the scanned device and Next

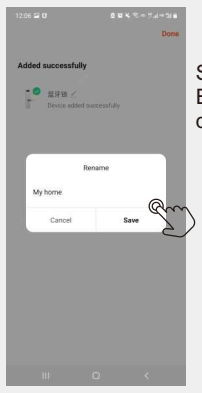

Step 4
Edit your device name

Step 5
You can press the icon to unlock via Bluetooth.

Step 6
You can generate a remote dynamic password.

Mini Smart Gateway (Optional)

Users can connect the device to the Internet via a smart mini-gateway for remote control through your application.
Note: Mini Smart Gateway can only be configured on 2.4GHz network.

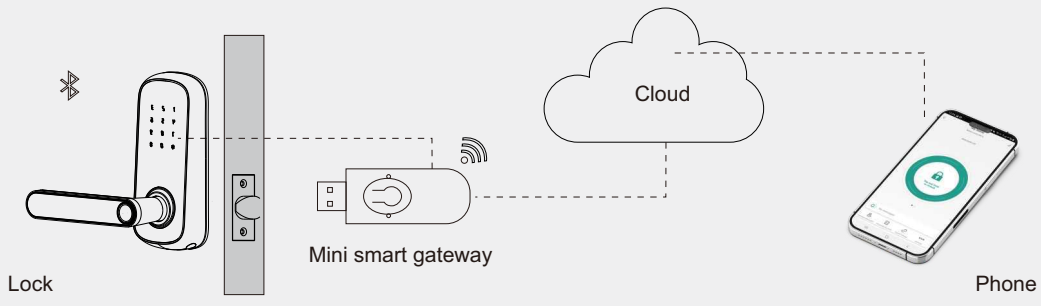

*Optional, please consult your local seller for details.

Privacy mode description

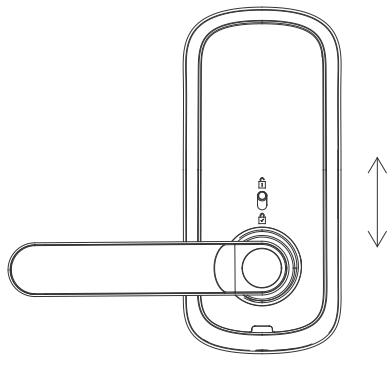

Privacy mode
Slide the switch up and down to turn the privacy mode.

When switch to " 🔒 ", privacy mode is turned on. only master programming pin code, dynamic pin code and spare key can unlock from the outside. User identification is prohibited.

When switch to " 🔓 ", privacy mode is turned off. All of the identifications can unlock from the outside.

⚠ CAUTION
1. If passage mode is turned on, it will be turned off automatically when privacy mode switched on.
2. When privacy is turned on, passage mode cannot set on both of the lock and APP.

Warning: Changes or modifications to this unit not expressly approved by the party responsible for compliance could void the user ' s authority to operate the equipment.

NOTE: This device complies with part 15 of the FCC Rules. Operation is subject to the following two conditions: (1) This device may not cause harmful interference, and
(2) this device must accept any interference received, including interference that may cause undesired operation.

FCC Statement: This equipment has been tested and found to comply with the limits for a Class B digital device, pursuant to part 15 of the FCC Rules. These limits are designed to provide reasonable protection against harmful interference in a residential installation. This equipment generates, uses and can radiate radio frequency energy and, if not installed and used in accordance with the instructions, may cause harmful interference to radio communications. However, there is no guarantee that interference will not occur in a particular installation. If this equipment does cause harmful interference to radio or television reception, which can be determined by turning the equipment off and on, the user is encouraged to try to correct the interference by one or more of the following measures:
—Reorient or relocate the receiving antenna.
—Increase the separation between the equipment and receiver.
—Connect the equipment into an outlet on a circuit different from that to which the receiver is connected.
—Consult the dealer or an experienced radio/TV technician for help.
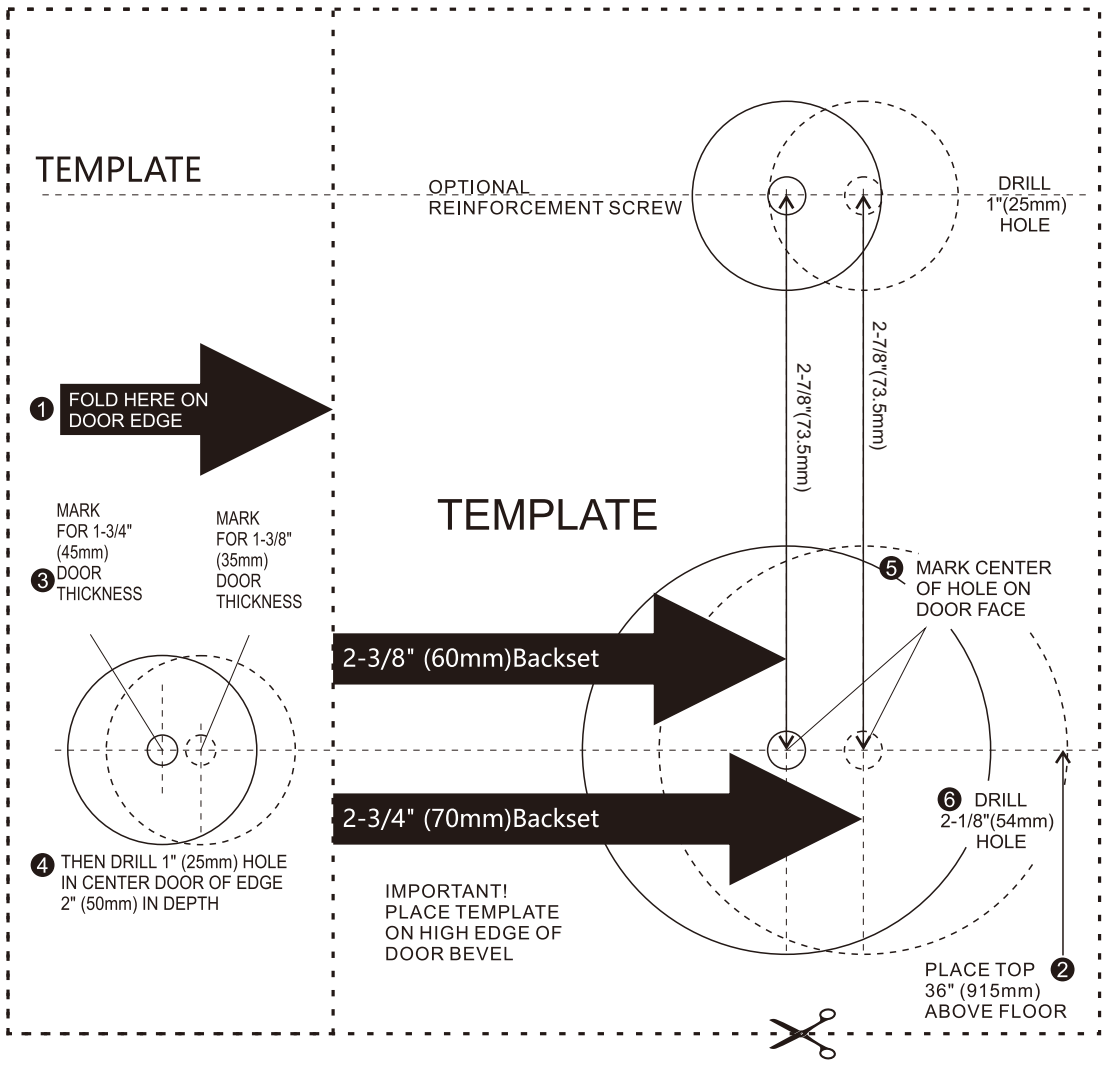
The equipment complies with FCC Radiation exposure limit set forth for uncontrolled environment.
This equipment should be installed and operated with minimum distance 20cm between the radiator and your body.