All-in-One Display

1000NITS

1000 nits High Brightness

Multi-point Touch

1920×1080

1920×1080 Resolution

P64 Front Panel

ISO 7637-2

Windows 10

Linux Ubuntu 10

Contents

Safety Instruction 2

Notes 2

1. Feature 4

2. Function Description 4

3. Specification 5

4. Sketch Map 6

5. Production Description 7

6. Installation Instruction 8

7. Accessories 9

8. Trouble Shooting 9

Safety Instruction

- Please read this product guide carefully before use.
- Please keep it properly for future reference.
- Please read the precautions carefully to prevent possible dangers and property losses.

Notes

- Do not place the screen of the monitor facing the ground.
- Avoid strong impact or falling from high places.
- Do not use chemical reagents or solvents to scrub the machine. Please wipe the dust and dirt on the machine with a soft cloth to ensure the good surface of the product.
- Do not block any vents.
- Please adjust this product according to the instruction manual and troubleshooting guide, any improper operation may cause damage to this product. Any further adjustment needs to be operated by certified technicians or under the guidance of certified technicians.
- If the product is not used for a long time, or there is lightning, please unplug the power plug and remove the battery.
- FCC Statement

This equipment has been tested and found to comply with the limits for a Class B digital device, pursuant to part 15 of the FCC Rules. These limits are designed to provide reasonable protection against harmful interference in a residential installation. This equipment generates, uses and can radiate radio frequency energy and, if not installed

and used in accordance with the instructions, may cause harmful interference to radio communications. However, there is no guarantee that interference will not occur in a particular installation. If this equipment does cause harmful interference to radio or television reception, which can be determined by turning the equipment off and on, the user is encouraged to try to correct the interference by one or more of the following measures:

Reorient or relocate the receiving antenna.

Increase the separation between the equipment and receiver.

Connect the equipment into an outlet on a circuit different from that to which the receiver is connected.

Consult the dealer or an experienced radio/TV technician for help.

Caution: Any changes or modifications to this device not explicitly approved by manufacturer could void your authority to operate this equipment.

This device complies with part 15 of the FCC Rules. Operation is subject to the following two conditions: (1) This device may not cause harmful interference, and (2) this device must accept any interference received, including interference that may cause undesired operation.

RF Exposure Information

This equipment complies with FCC radiation exposure limits set forth for an uncontrolled environment. This equipment should be installed and operated with minimum distance 20cm between the radiator and your body.

1. Feature

- Support COM×2, 1000M LAN×1, USB2.0×2, USB3.0×2 and MIC in.
- Support VGA, HDMI and Earphone outputs.
- 1920×1080 resolution.
- 1000 cd/m² high brightness.
- Win10/ Linux OS for optional. Users can install the corresponding operating system according to their personal habits, and there is no operating system by factory default.

2. Function Description

Applications / Functions	Industrial Control	Multi-media ads
All-in-one	● Wi-Fi WLAN (extension) ● Wired network control ● Software control equipment ● Touch screen control ● Special software installation	● Wi-Fi WLAN (extension) ● Wired network control ● software control ● One to more screens display output control

3. Specification

Display	Display screen	TFT LED
	Screen size	15.6 inch
	Resolution	1920×1080
	Aspect ratio	16:9
	Brightness	1000cd/m^2
	View angle	160°/160°(H/V)
	Touch screen	Multi-point touch capacitive
Mainboard	CPU	Intel Core i3, 2.1GHz dual-core processor
	RAM	Standard: 4GB; Optional: 8GB
	SSD	mSATA SSD 120GB Optional:1TB
	WIFI	IEEE 802.11b/g/n 2.4G 1T/1R
	Bluetooth	2402MHz~2480MHz
	I/O	2 × COM 1 × LAN 2 × USB2.0 2 × USB3.0 1 × HDMI output 1 × VGA output 1 × DC 12V 1 × Ear jack

		1 × MIC
	OS	Win10, Linux
Others	Power supply	DC 12V
	Power consumption	≤45W
	Working temperature	-10°C - 60°C
	Storage temperature	-20°C - 70°C
	Dimension	408mm x 259mm x 50.5mm
	Weight	4.06kg

4. Sketch Map

5. Product Description

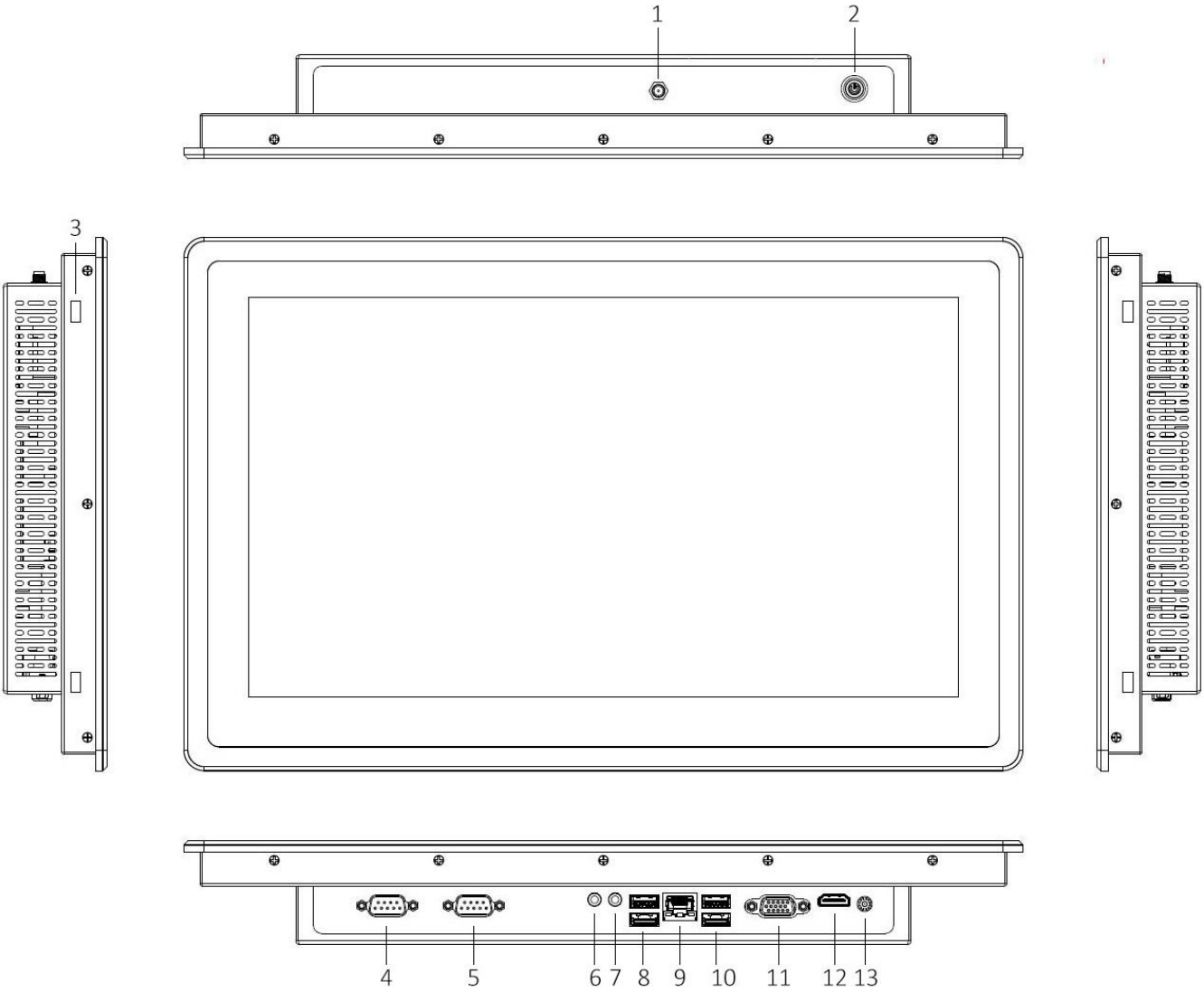

1、Antenna port

2、Power button, to power ON/OFF screen

3、Fixed screw hole

4、COM 1 (Support RS232)

5、COM 2 (Support RS232 / RS485 / RS422)

6、MIC: Audio input

7、Ear jack: Audio output

8、USB port (USB 2.0×2)

9、1000M LAN (RJ45)

10、USB port (USB 3.0×2)

11、VGA output, to connect with PC

12、HDMI output

13、DC 12V port

6. Installation Instruction

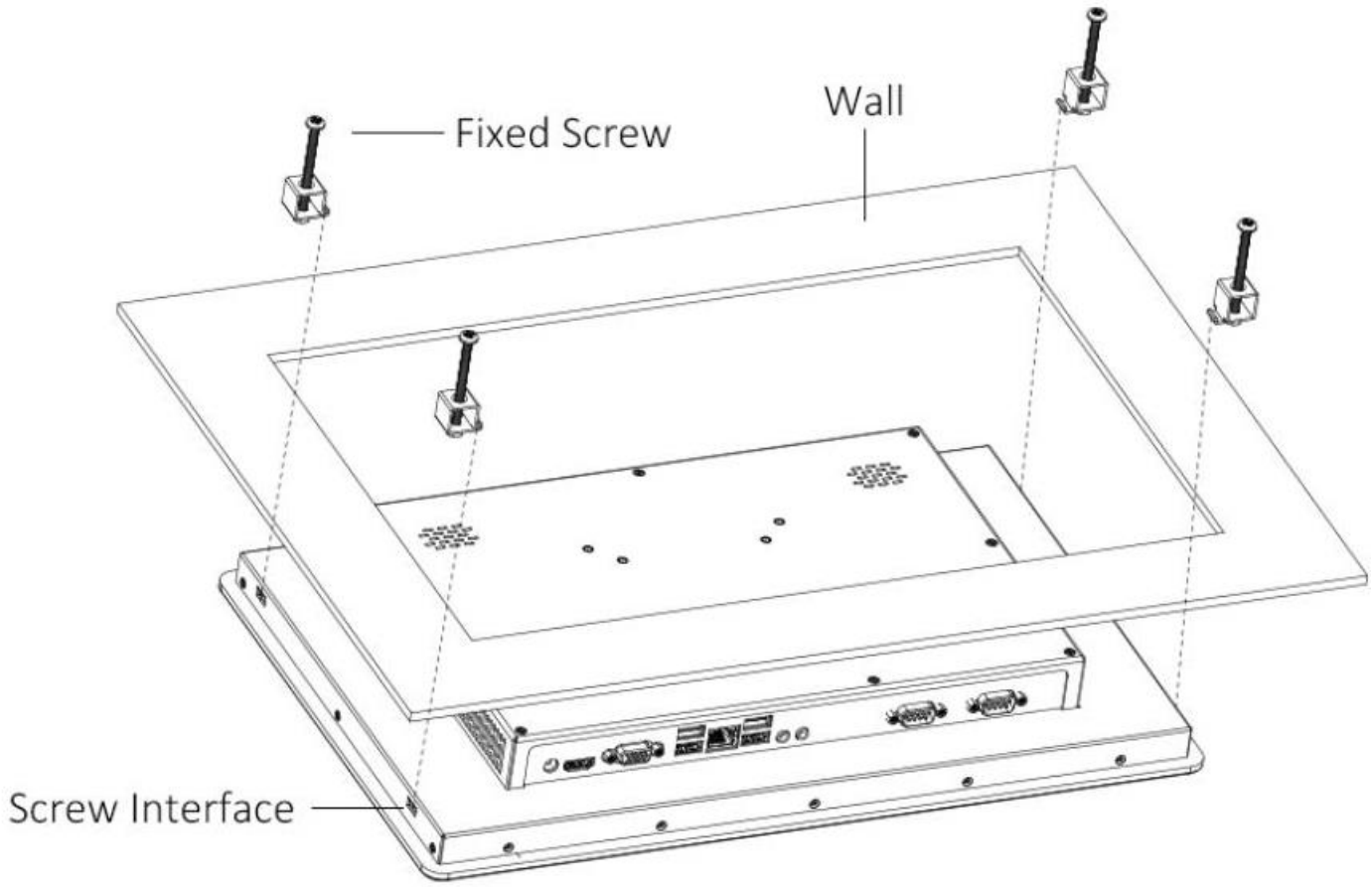

7. Accessories

1) 12V DC power adapter	1 pair
2) External Wi-Fi antenna	1 pair
3) Fixed screws	1 set

8. Trouble Shooting

1. The power indicator doesn’t light on after pressed the power button.

   -Please check and make sure the power connection is correct and the power supply proper.

2. No sound

   -Please check and make sure the audio lint is connected properly.

   -Please check is the system is in MUTE mode or the volume is down to the minimum level.

   -Check whether the driver of audio card is installed correctly.

3. No display

   -Check whether the display work properly.

-Check and make sure the connection is correctly.

4. If the system does not recognize USB accessories,

-Retry the plug-in so that the system can recognize it again.

-Try a different USB port.

-Check whether the driver is installed correctly.