SHUODIAN ELECTRONIC AND TECHNOLOGY CO.,LTD.

APPROVAL SHEET

MULTILAYER CERAMIC ANTENNA

RFANT Pb free Series – RoHS Compliance

Halogens Free Product

2.4 GHz ISM Band Working Frequency

P/N: RFANT5220A0T

Shenzhen Bat Wireless Technology Co.,Ltd
1409, Building A, Zhiyun One Industrial Park, No. 13 Huaxing Road, Henglang Community, Dalang Street, Shenzhen, Guangdong, China

FEATURES

1. Surface Mounted Devices with a small dimension of 5.2 x 2.0 x 1.1 mm^3 meet future miniaturization trend.
2. Embedded and LTCC (Low Temperature Co-fired Ceramic) technology is able to future integrate with system design as well as beautifying the housing of final product.
3. High Stability in Temperature / Humidity Change

APPLICATIONS

1. Bluetooth
2. Wireless LAN
3. HormRF
4. ISM band 2.4GHz wireless applications

DESCRIPTION

Walsin Technology Corporation develops a new ceramic embedded antenna specified for 2.4 GHz ISM Band application, as shown in below "CONSTRUCTION". Both of Wireless LAN IEEE 802.11b and Bluetooth™ typically located on this unlicensed frequency band which range covers from 2.4GHz to 2.4835GHz. To fulfil the friendly usage for antenna, this antenna has been designed to a typical 150MHz bandwidth through Walsin's advanced LTCC (Low Temperature Co-fired Ceramic) technology and superior product design via 3D EM Simulation Skill.

This antenna has a rectangular ceramic body with a tiny dimension of 5.2x 2.0 x 1.1 mm^3 meet the future SMT automation and miniaturization requirements on modern portable devices.

CONSTRUCTION

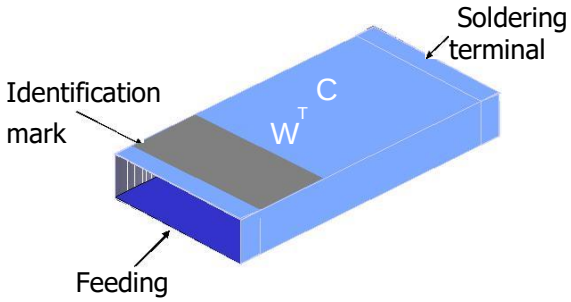

DIMENSIONS

Figure	Symbol	Dimension
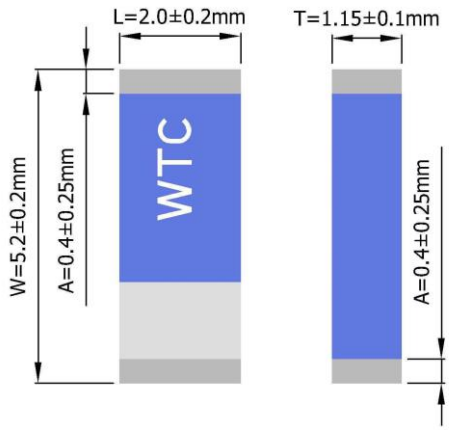	L	5.20 ± 0.20 mm
	W	2.00 ± 0.20 mm
	T	1.15 ± 0.10 mm
	A	0.40 ± 0.25 mm

SOLDER LAND PATTERN DESIGN

Figure

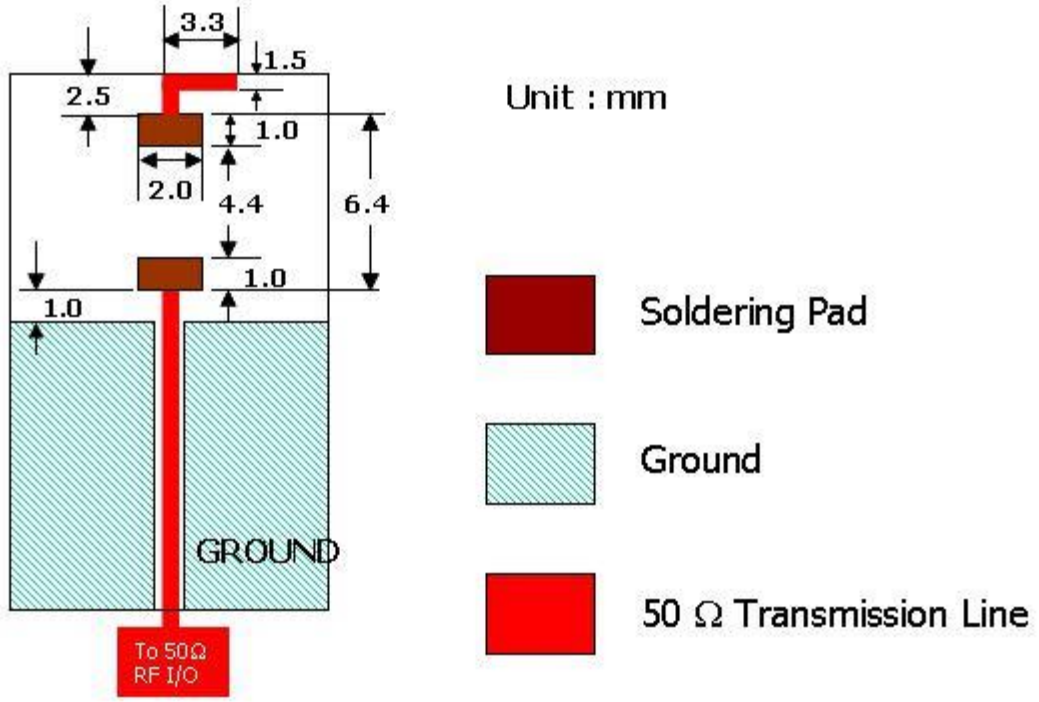

ELECTRICAL CHARACTERISTICS

RFANT5220A0T	Specification
Working Frequency Range	2.4 GHz ～ 2.5GHz
Gain	2.66 dBi (Typical)
VSWR	2 max.
Polarization	Linear
Azimuth Bandwidth	Omni-directional
Impedance	50Ω
Rated Power (max.)	3 Watts
Maximum Input Power	5 Watts for 5 minutes
Operation Temperature	-40˚C ~ +85˚C

Remark: The specification is defined based on the test board dimension as in below

Antenna on Test Board (FR4 Thickness 0.8mm)

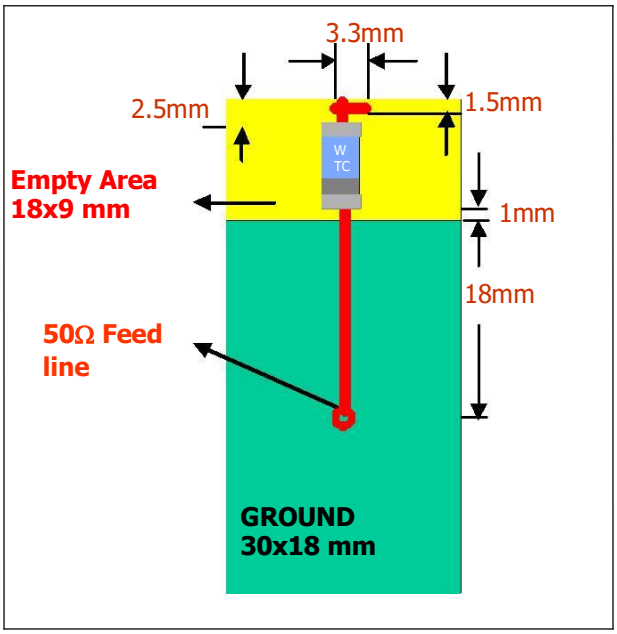

Antenna S11 on Test Board

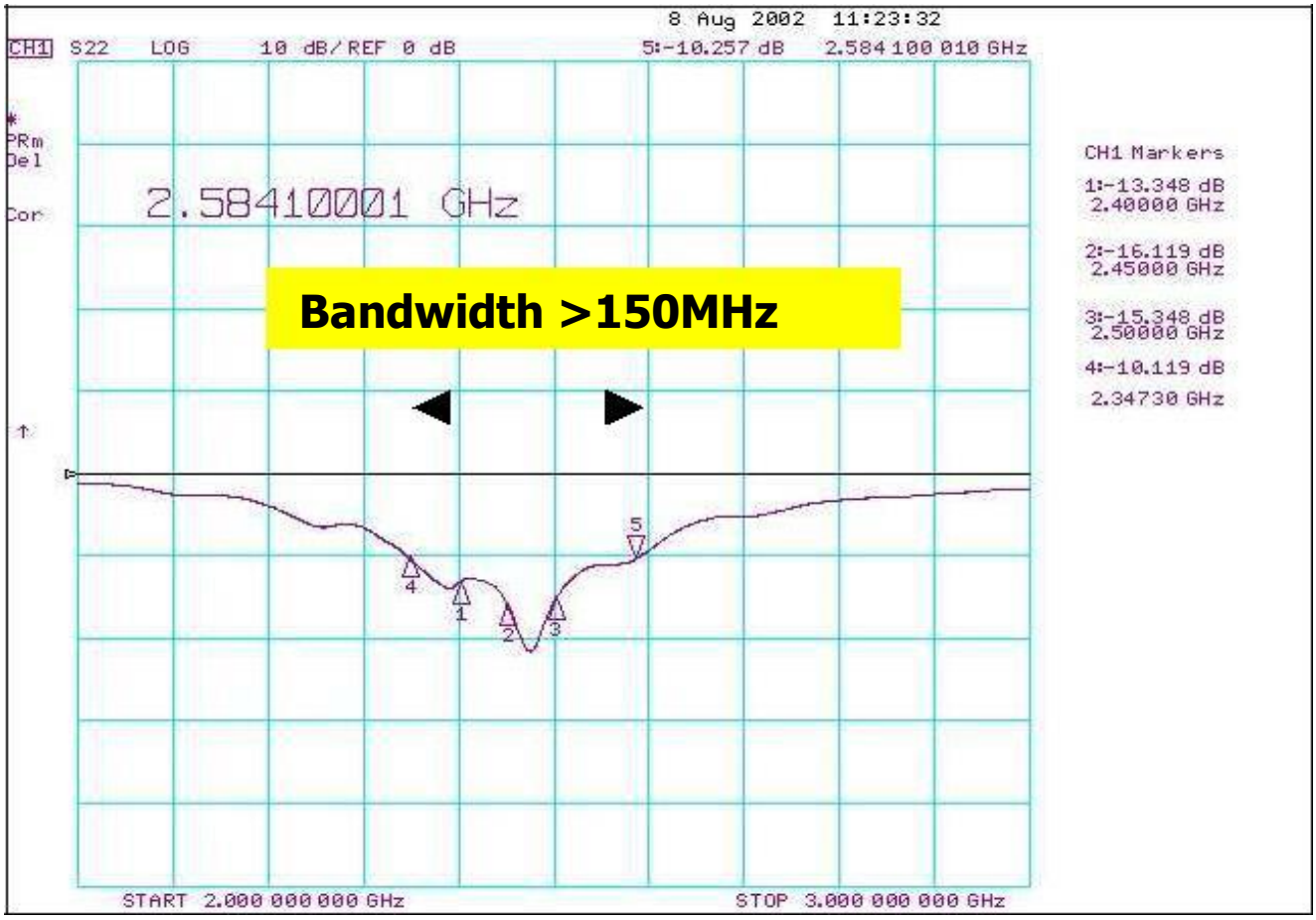

RADIATION PATTERN

Radiation Pattern and Gain were dependent on measurement board design. The specification of RFANT5220110A0T antenna was measured based on the PCB size and installation position as shown in the below figure Test Board

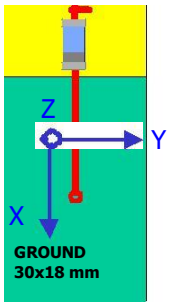

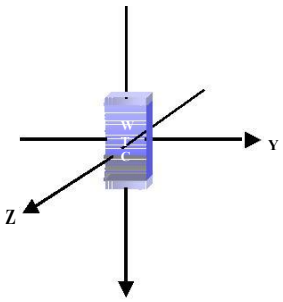

x

	Vertical	Horizontal
Y - Z Plane Average Gain= -0.82 dBi	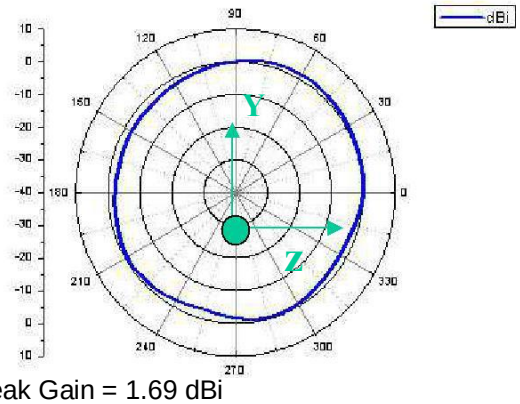 Peak Gain = 1.69 dBi Average Gain =-3.22 dBi	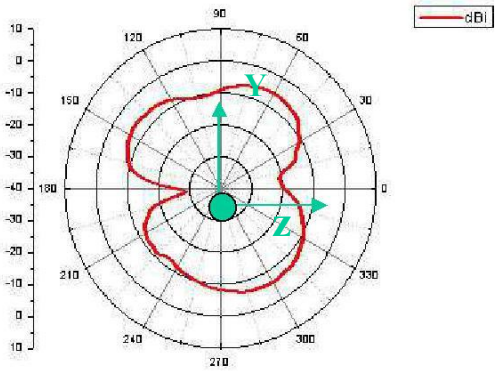 Peak Gain= -5.42 dBi Average Gain=-8.98 dBi
X - Z Plane Average Gain=-0.91 dBi	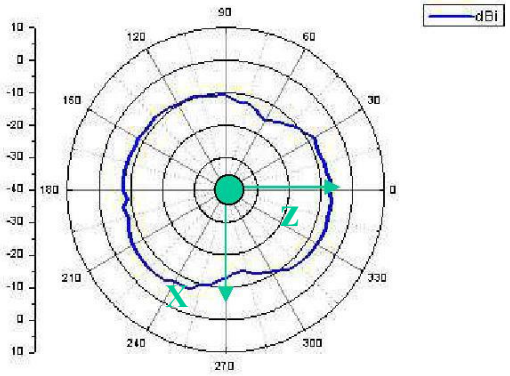 Peak Gain= -5.97 dBi Average Gain=-3.24dBi	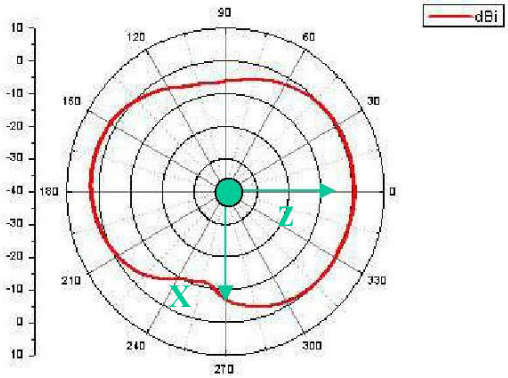 Peak Gain= 2.66 dBi Average Gain= -8.61 dBi
X - Y Plane Average Gain= -0.68 dBi	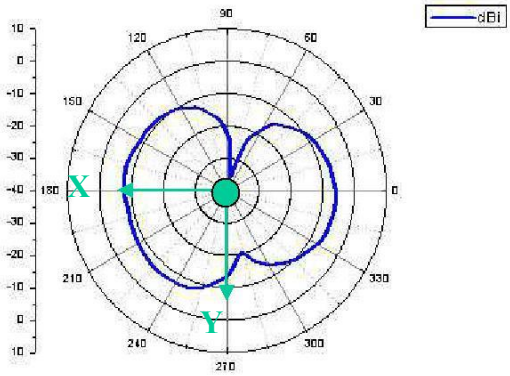 Peak Gain= -5.97 dBi Average Gain=-3.12 dBi	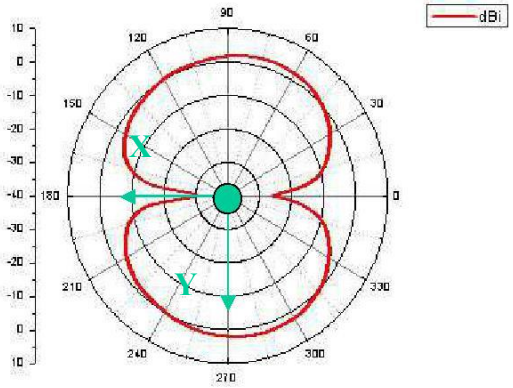 Peak Gain= 2.59 dBi Average Gain= -9.24 dBi

RELIABILITY TEST

Test item	Test condition / Test method	Specification
Solderability JIS C 0050-4.6 JESD22-B102D	*Solder bath temperature：235 ± 5°C *Immersion time：2 ± 0.5 sec *Solder：Sn3Ag0.5Cu for lead-free	At least 95% of a surface of each terminal electrode must be covered by fresh solder.
Leaching (Resistance to dissolution of metallization) IEC 60068-2-58	*Solder bath temperature：260 ± 5°C *Leaching immersion time：30 ± 0.5 sec *Solder : SN63A	Loss of metallization on the edges of each electrode shall not exceed 25%.
Resistance to soldering heat JIS C 0050-5.4	*Preheating temperature：120~150℃, 1 minute. *Solder temperature：270±5°C *Immersion time：10±1 sec *Solder：Sn3Ag0.5Cu for lead-free Measurement to be made after keeping at room temperature for 24±2 hrs	No mechanical damage. Samples shall satisfy electrical specification after test. Loss of metallization on the edges of each electrode shall not exceed 25%.
Drop Test JIS C 0044	*Height：75 cm *Test Surface：Rigid surface of concrete or steel. *Times：6 surfaces for each units；2 times for each side.	No mechanical damage. Samples shall satisfy electrical specification after test.
Adhesive Strength of Termination JIS C 0051- 7.4.3	*Pressurizing force： 5N(≦0603)；10N(>0603) *Test time：10±1 sec	No remarkable damage or removal of the termination.
Bending test JIS C 0051- 7.4.1	The middle part of substrate shall be pressurized by means of the pressurizing rod at a rate of about 1 mm/s per second until the deflection becomes 1mm/s and then pressure shall be maintained for 5±1 sec. Measurement to be made after keeping at room temperature for 24±2 hours	No mechanical damage. Samples shall satisfy electrical specification after test.

Temperature cycle JIS C 0025	1. 30±3 minutes at -40°C±3°C, 2. 10~15 minutes at room temperature, 3. 30±3 minutes at +85°C±3°C, 4. 10~15 minutes at room temperature, Total 100 continuous cycles Measurement to be made after keeping at room temperature for 24±2 hrs	No mechanical damage. Samples shall satisfy electrical specification after test.
Vibration JIS C 0040	*Frequency：10Hz~55Hz~10Hz(1min) *Total amplitude：1.5mm *Test times：6hrs.(Two hrs each in three mutually perpendicular directions)	No mechanical damage. Samples shall satisfy electrical specification after test.
High temperature JIS C 0021	*Temperature：85°C±2°C *Test duration：1000+24/-0 hours Measurement to be made after keeping at room temperature for 24±2 hrs	No mechanical damage. Samples shall satisfy electrical specification after test.
Humidity (steady conditions) JIS C 0022	*Humidity：90% to 95% R.H. *Temperature：40±2°C *Time：1000+24/-0 hrs. Measurement to be made after keeping at room temperature for 24±2 hrs ※ 500hrs measuring the first data then 1000hrs data	No mechanical damage. Samples shall satisfy electrical specification after test.
Low temperature JIS C 0020	*Temperature：-40°C±2°C *Test duration：1000+24/-0 hours Measurement to be made after keeping at room temperature for 24±2 hrs	No mechanical damage. Samples shall satisfy electrical specification after test.

SOLDERING CONDITION

Typical examples of soldering processes that provide reliable joints without any damage are given in Fig 2

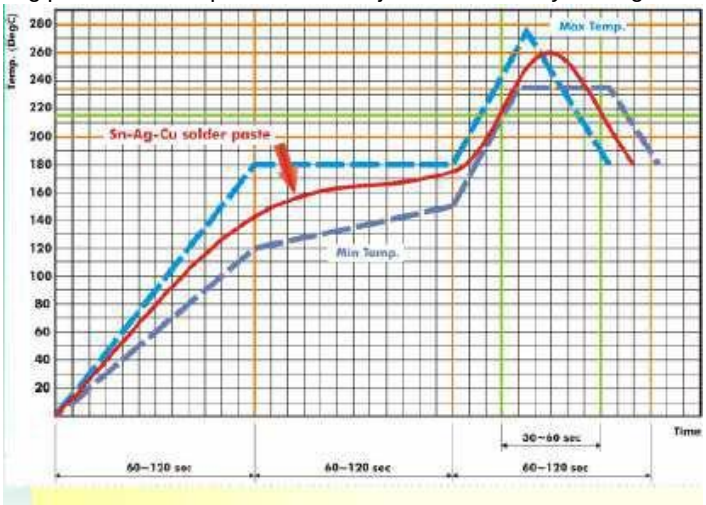

Fig 2. Infrared soldering profile

ORDERING CODE

RF	ANT	522011	0	A	0	T
Walsin RF device	**Product code** ANT : Antenna	**Dimension code** Per 2 digits of Length, Width, Thickness : e.g. : 522011 = Length 52, Width 20, Thickness 11	**Unit of dimension** 0 : 0.1 mm 1 : 1.0 mm	**Application** A : 2.4GHZ ISM Band	**Specification** Design Code	**Packing** T : 7" Reeled

Minimum Ordering Quantity: 2000 pcs per reel.

PACKAGING

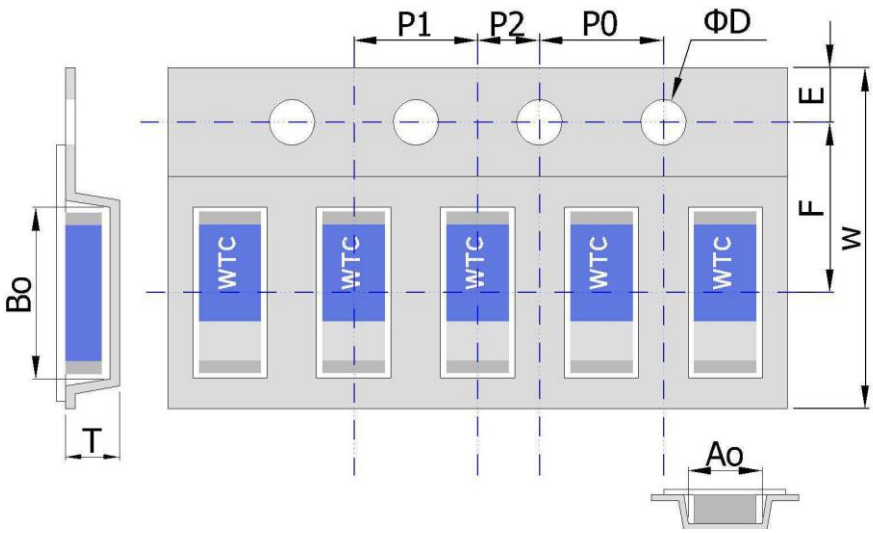

Plastic Tape specifications (unit :mm)

Index	Ao	Bo	ΦD	T	W
Dimension (mm)	2.40 ± 0.10	5.50 ± 0.10	1.55 ± 0.05	1.20 ± 0.10	12.0 ± 0.10
Index	E	F	Po	P1	P2
Dimension (mm)	1.75 ± 0.10	5.50 ± 0.10	4.00 ± 0.10	4.00 ± 0.10	2.00 ± 0.10

Reel dimensions

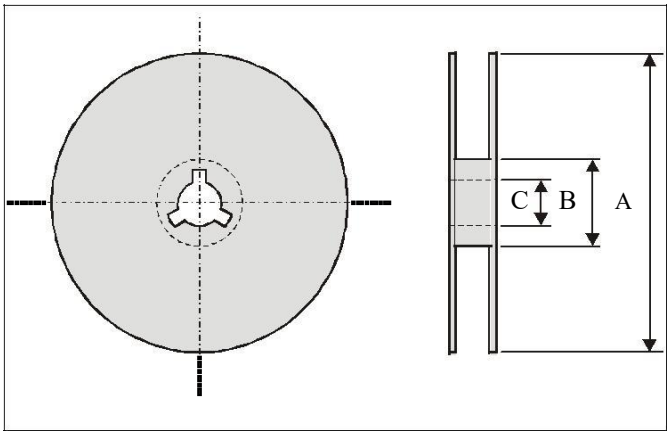

Index	A	B	C
Dimension (mm)	Φ178	Φ60.0	Φ13.5

Typing Quantity: 2000 pieces per 7” reel

CAUTION OF HANDLING

Limitation of Applications

Please contact us before using our products for the applications listed below which require especially high reliability for the prevention of defects, which might directly cause damage to the third party’s life, body or property.

4. Aircraft equipment
5. Aerospace equipment
6. Undersea equipment
7. Medical equipment
8. Disaster prevention / crime prevention equipment
9. Traffic signal equipment
10. Transportation equipment (vehicles, trains, ships, etc.)
11. Applications of similar complexity and /or reliability requirements to the applications listed in the above.

Storage condition

(1) Products should be used in 6 months from the day of WALSIN outgoing inspection, which can be confirmed.

(2) Storage environment condition.

Products should be storage in the warehouse on the following conditions.

Temperature : -10 to +40°C

Humidity : 30 to 70% relative humidity

Don’t keep products in corrosive gases such as sulfur. Chlorine gas or acid or it may cause oxidization of electrode, resulting in poor solderability.

Products should be storage on the palette for the prevention of the influence from humidity, dust and son on.

Products should be storage in the warehouse without heat shock, vibration, direct sunlight and so on.

Products should be storage under the airtight packaged condition.