# Shenzhen Yongman digital Co., LTD

2nd Floor, Building 1, Tiantong Industrial Park, Gaofeng Community, Dalang Street, Longhua District, Shenzhen, China

# Product specification for Phone

**PRODCT SPECIFICATION FOR APPROVAL**

**CUSTOMER/客户名称：**

**Type of product ion/产品类别：** **无线快充座/Wireless fast charging seat** 。

**Customer 'S PART NO 客户型号：** 。

**Mode No:机种名称：** **YM-X455-V0.3** 。

**Date:/制订日期：** **2023/07/31** 。

**Edition: 版本：** **V0.3** 。

**CUSTOMER ADMIT/客户承认**

| | | |
|---|---|---|
| **Design By: 拟定** | **Check. By:/检查** | **Auditing:/审查** |
| | | |

## 1.外观标准：/1. Appearance standard:

**a) PCBA焊接要求符合 IPC-A-610-E ；/a) PCBA welding requirements meet IPC-A-610-E;**

特殊要求（按客户要求执行）/Special requirements (as required by customer)

**b) PCB表面丝印标识：/b) Screen printing on PCB surface:**

开发商（或制造商）标识: YM / Developer (or manufacturer) ID: YM .

客户型号：/Customer Model:. .

PCB版本/PCB version: YM-X455-V0.3 .

PCB设计日期/PCB design date 2023/07/22 .

**c) PCB颜色：** **绿油白字 /c) PCB color: green oil white characters .**

**d) PCB接口板材：FR4 /d) PCB interface board: FR4**

**e) 板 厚/e) Plate thickness: 0.9MM-1.1MM**

# 2. 电性能标准：/2. Electrical performance standard:

| 序号/Serial number | 类别/category | 电性能项目/Electrical performance item | | 测试标准/Test standard | 测试条件/Test condition |
|---|---|---|---|---|---|
| 1 | 无线充性能/Linear charge energy | | 符合 QI1.2 标准，兼容所有 QI 无线充电设备/Comply with QI1.2 standard, compatible with all QI wireless charging devices | | |
| 2 | | | 带FOD 功能/With FOD function | 1块硬币大小可以检测/1 coin size can be detected | 蓝灯闪/Blue light flash |
| 3 | | 15W无线充/15W wireless charge | 输入电压/Input voltage | 9V | 支持QC2.0/QC3.0/PD<br>QC2.0/QC3.0/PD is supported |
| 4 | | | 输入电流/Input current | 9V/2A | |
| 5 | | | 输出电流/Output current | 9V/1.66A | |
| 6 | | 10W无线充/10W wireless charge | 输入电压/Input voltage | 9V | |
| 7 | | | 输入电流/Input current | 9V1.65A | |
| 8 | | | 输出电流/Output current | 9V1.1A | |
| 9 | | 5W无线充/5W wireless charge | 输入电压/Input voltage | 5V | |
| 10 | | | 输入电流/Input current | 5V/1.5A | |
| 11 | | | 输出电流/Output current | 5V/1.0A | |
| 12 | | | 无线充适合距离/Wireless charging is suitable for distance | 2MM-6MM | 最好2MM<br>Preferably 2MM |
| 13 | | | 无线充效率/Wireless charging efficiency | 70-75% | |
| 14 | LED灯显示性能/LED lights display performance | 空载/unloaded | | 蓝灯常亮 | |
| 15 | | 带载/on-load | | 蓝灯呼吸亮 | |
| 16 | | | | | |
| 17 | | | | | |

# 3. PCB图档/3. PCB drawing file

3.1 PCB尺寸图：PCB长宽公差正负：0.15MM，厚度：1.0MM+/—0.13MM

3.1 PCB size diagram: PCB length and width tolerance: 0.15MM, thickness: 1.0MM+/ - 0.13MM

3.2 TOP layer

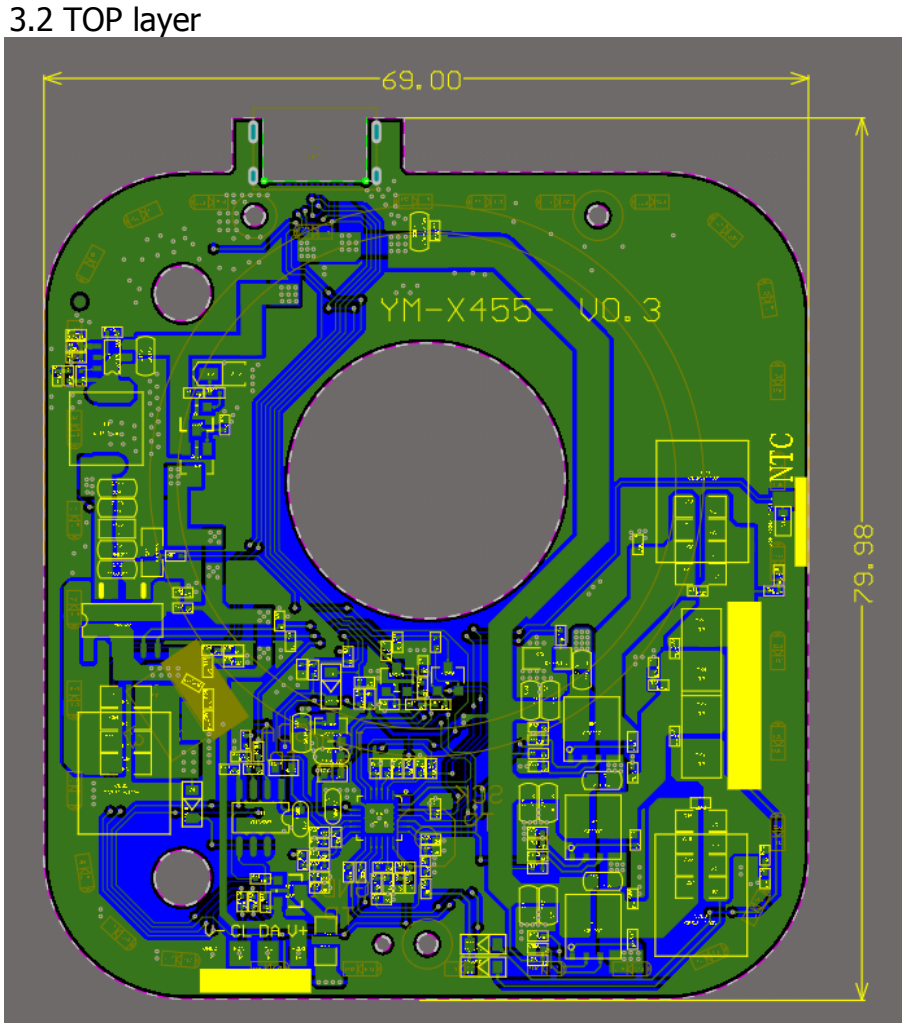


3.3 BOTTOM layer

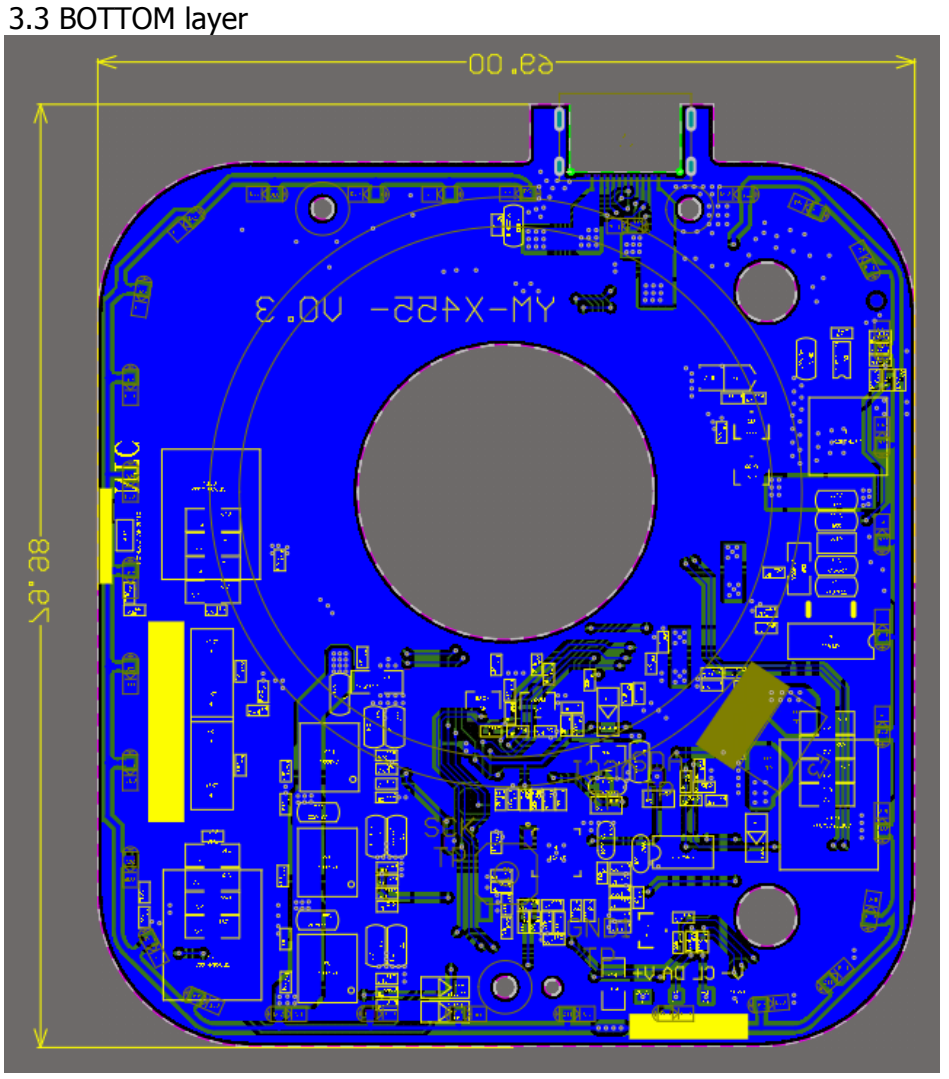

## 4.PCBA图片/4.PCBA picture

PCBA正面图

PCDA反面图

4.环保要求：根据客户要求环保

4. Environmental protection requirements: Environmental protection according to customer requirements

## 5.线圈尺寸/5.Coil Size (Unit: mm)

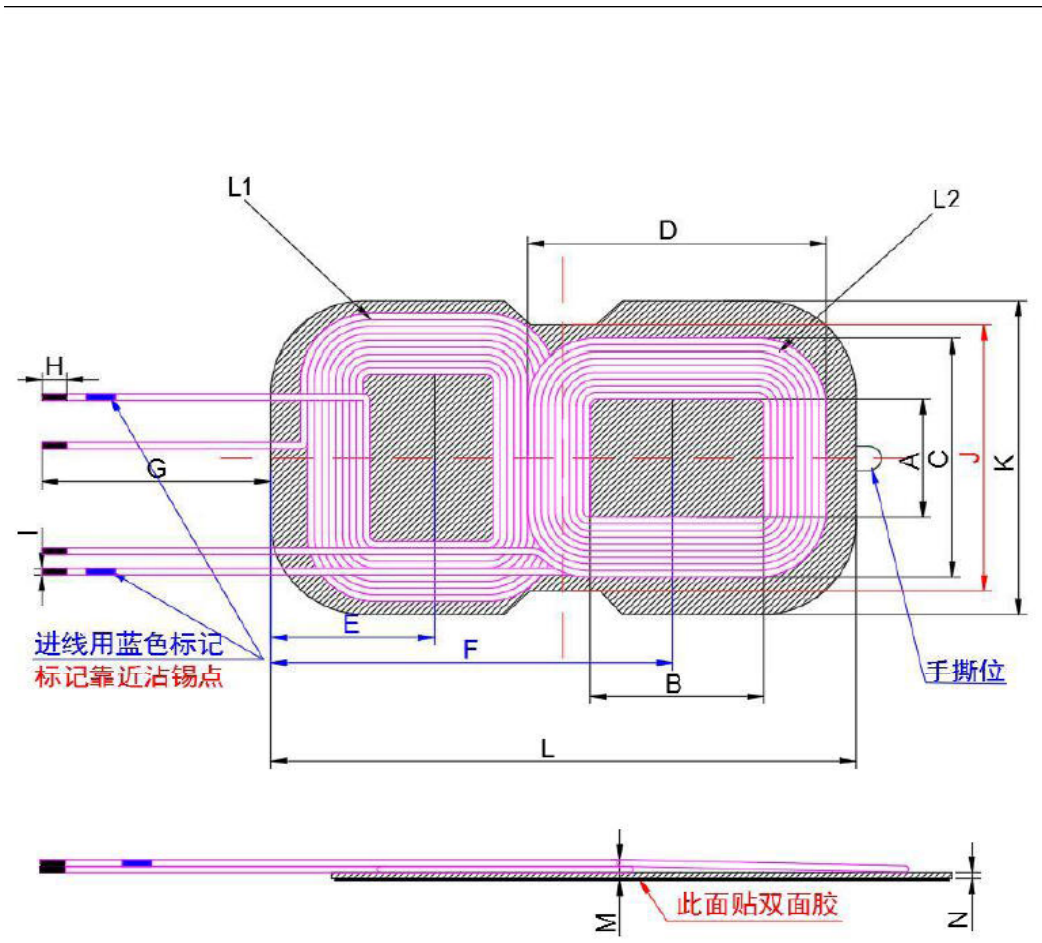


| | |
|---|---|
| A | 19.5±0.5 |
| B | 27.5±0.5 |
| C | 41±0.8 |
| D | 49±0.8 |
| E | 26.3±0.5 |
| F | 64.3±0.5 |
| G | **90.0±1.5** |
| H | 4MAX |
| I | 1.8MAX |
| J | 43.5±0.5 |
| K | 52.5±0.5 |
| L | 94.4±0.7 |
| M | 4.5MAX |
| N | 1±0.2 |

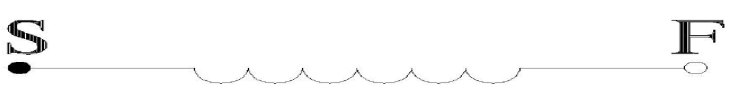


We statement that All measurements were performed radiated and therefore additional antenna gain documentation is not required.

# SPECIFICATION FOR TWS Coil

| | | | | | |
|---|---|---|---|---|---|
| PART NO | **A11-6.5UH-001** | MODEL | **A11 内径Φ20.5*Φ42 Φ 0.08*105P丝包线*10TS Φ50*Φ5.3*T1.0 感量6.5UH 引线长60.0mm** | REV | AA版 |
| Product Name | 无线充发射线圈 | DRAWING NO | NSDKS A11-6.5UH-001 | DOC TYPE | AA版 |

1.CONSTRUCTION DIMENSION(UNIT:mm)

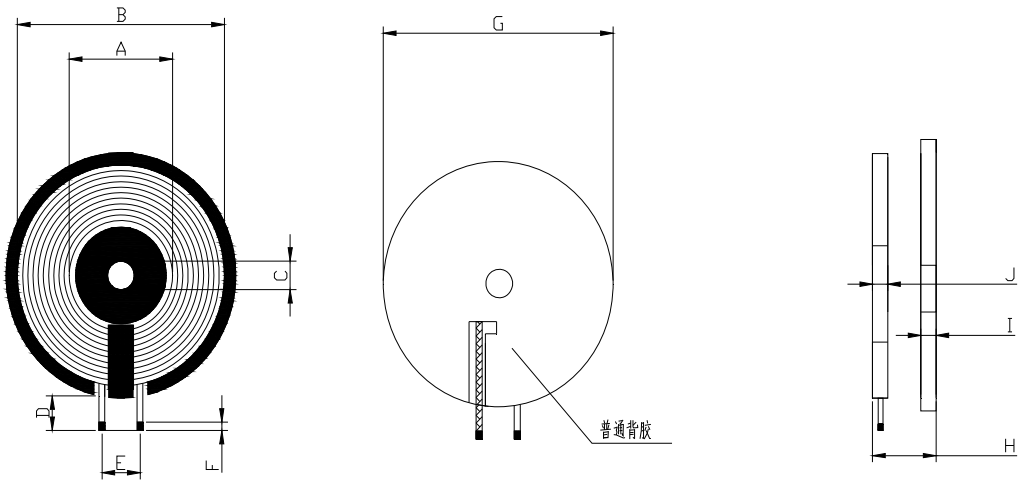


| | |
|---|---|
| A | 20.50±0.5 |
| B | MAX43.0 |
| C | 5.3±0.1 |
| D | 60.0±3.0 |
| E | REF.7.0+/-1.0 |
| F | 3.0±1.0 |
| G | 50.0±0.5 |
| H | 2.50MAX |
| I | 1.0±0.10 |
| J | 1.25±0.1 |

■REMARK:1.D为磁片外引线长度；2.J不包含进线；

Shenzhen Yongman digital Co., LTD

2nd Floor, Building 1, Tiantong Industrial Park, Gaofeng Community, Dalang Street, Longhua District, Shenzhen, China

We statement that All measurements were performed radiated and therefore additional antenna gain documentation is not required.

# SPECIFICATION FOR Watch Coil

客户/Client

名称/TYPE 发射线圈 44MM （环保状况：RoHS+HF ）

产品型号

Model NO SG-A1144-6.6UH

产品编号 SG-A11-030

Part nunbering systey

客户料号

Client p/NO

工程编号

Enginrer NO TQE 1800510003

日期/Date 2021-10-9

| 本公司工程部/For Enginer Departner Only | |
|---|---|
| 修改内容/Rrvised Content | 认可日期/APProved Date |
| | |

| 编制/Prepared | 审核/Checked | 认可/Approved |
|---|---|---|
| DuanJiaWang | XieLiang | XieXiaoZai |

| 客户认可回签/Authorixed Signaturure Company Chop | | |
|---|---|---|
| 工程/ Enginrer | 认可/QC APProved | 认可日期/APProved |
| | | |

## 一、 线圈工艺/Winding Procese:

| NO | 绕组 | 线规 | 匝数 | 绕线方向 | 备注 |
|---|---|---|---|---|---|

| | | | | | |
|---|---|---|---|---|---|
| 1 | N1 | 2UEW-B-0.08*24P*2 | 10TS | CCW | |
| 2 | | | | | |

## 二．电气性能/FEATURES:

1.测试条件（Test conditions）：25°C,65%RH@100KHz/1V

1.1 电感量（Inductance）

1.11 L0A（单独线圈）=3.8uH±20%

1.12 L0A(线圈+磁片)=6.3uH±10%

1.2 Q 值=70MIN

1.3 直流电阻（DCR）：55mΩ MAX

1.4 工作温度(Operating Temperature)：-25℃~85℃

2.测试仪器(Test instrument)：**L:**创达 1068+1310;**DCR:**502BC;**SIZE:**Callipers

3.材料清单/ Bill of materials

| NO | item | Materials |
|---|---|---|
| 1 | WIRE | ¢ 0.08*24p*2 2UEW-1.0mm |
| 2 | FERRITE | 43.5*4.7* 0.8L double slot ferrite hard magnetic |
| 3 | GLUE | White glue |
| 4 | SOLDER | XCD-907B |
| 5 | Adhesive | Double-sided adhesive |
| 6 | High temperature adhesive | 8MM high temperature tape |
| 7 | | |
| 8 | | |

## 三．电路图/CIRCUIT DIAGRAM

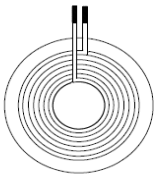


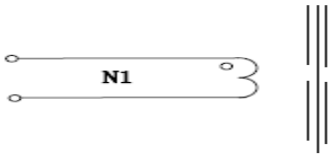


单位： MM

## 四．外形图/OUTSIDE DIAGRA

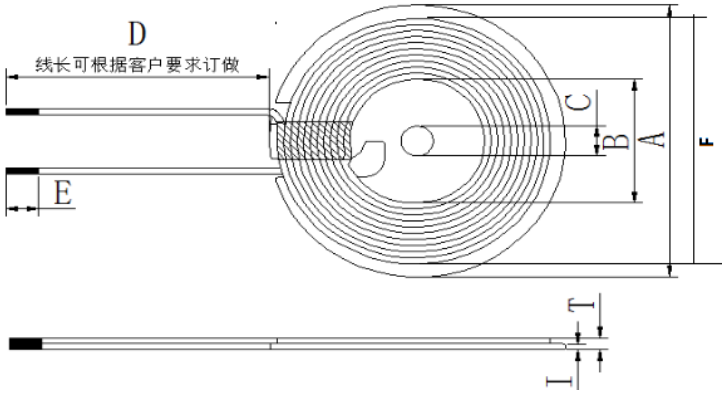


Note: Wrap 8MM (ref) high temperature adhesive paper around coil outlet position

注：线圈出线位置缠绕 8MM（ref）高温胶纸

| 标准 | A | B | C | D | E | F | I | T |
|---|---|---|---|---|---|---|---|---|
| STD | 43.5±1 | 20.5±0.5 | 4.7±0.5 | 30±2 | 2-5 | 39±1.2 | 0.8±0.2 | 1.6Max |

unit 单位： MM

We statement that All measurements were performed radiated and therefore additional antenna gain documentation is not required.

## 五．包装/PACKAGE

5.1 包装图片 Packing pictures:

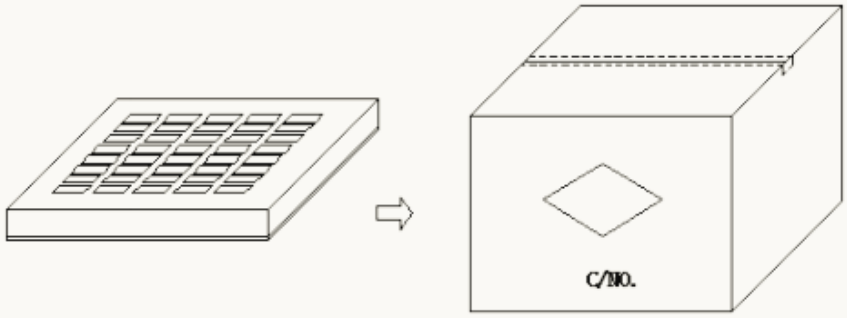


5.2 包装数量及规格 Packing Quantity:

| 项目 Item | 数量 Quantity | 材料规格 Material |
|---|---|---|
| 盒 Box | 350 Pcs | 345*330*50 mm |
| 箱 Big Carton | 1400 Pcs | 360*340*280 mm |

5.3 包装以现有包装盘为参照标准，以实际出货包装为准，如有特需要求可以定制。

***The packaging shall be based on the exusting packing plate and the actual delivery package shall prevail .If there is any requirement,we can customize it.***

## 六、贮存和使用条件 Storage and Use condition

### 6.1 贮存条件 Storage condition

6.1.1 建议贮存条件：温度-25℃～85℃ ，湿度 70% (Max.)

Recommended keeping conditions: -25℃ ~85℃, 70%RH (Max.)

6.1.2 贮存期限：自生产之日起六个月内

Storage life : Within the limits of six months from being produced.

### 6.2 使用条件 Use condition

使用条件限制：温度=-25℃～85℃，湿度≤ 90%

Use condition limit: T=-25℃~85℃, RH≤ 90%.