THANK YOU!

THANK YOU for selecting our Towel Warmer, the prefect addition to the bathrooms, family spas, and exercise rooms within your home. Our products have long been a standard for quality and comfort , and we are sure that you will experience continued enjoyment from the Towel Warmer you have purchased by following these simple instruction.

Please check that all components are present and that you are ENTIRELY happy with the size, design and finish BEFORE starting installation.

TOOLS REQUIRED

Installation should be carried out by a qualified professional or other fully competent person and should be installed in accordance with the relevant British and European Standards (BS5449:1990, BS7593:1992, EN12828:2003 & EN12831:2003)

PLUG-IN

HARD-WIRED

PARTS LIST !

REF	QTY	DESCRIPTION
①	3	Leg Mounts (leg for mounting the unit)
②	4	Leg Set Screws (anchors the leg Insert in the leg)
③	4	Leg Inserts (secures the leg to the wall flange)
④	3	Long Leg Bolt&Washer (secures leg to warmer)
⑤	4	Spare Washers (optionally added to bolts for fit)
⑥	4	Wall Screws (secures wall flange to wall)
⑦	4	Wall Flanges (fastens to the wall for mounting)

REF	QTY	DESCRIPTION
⑧	4	Drywall Anchors (used when installing in drywall)
⑨	1	Power Leg Mount (the leg the power cord exits)
⑩	1	Short Leg Bolt&Washer (secures leg to warmer)
M	1	Medium Hex Key (used for set screws②)
P	1	Small Hex Key (used to install Accessory Hook)
S	1	Leg Grommet (protects the power cord)

PARTS / ASSEMBLY

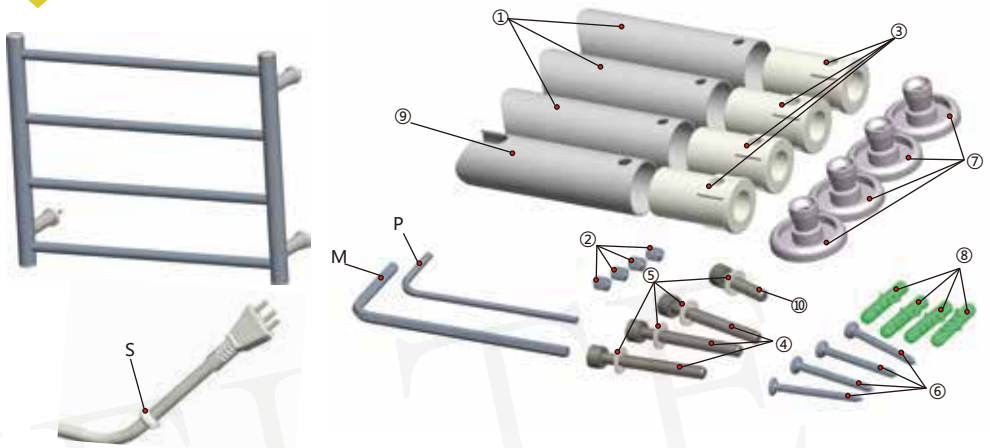

Leg Mounts (leg for mounting the unit)

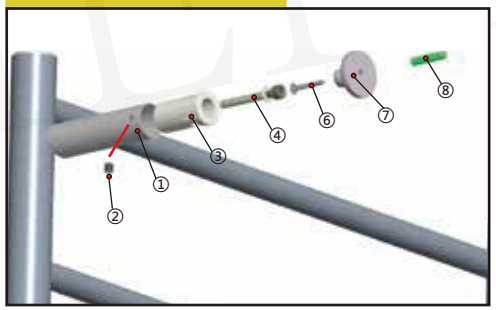

Power Leg Mount (the leg the power cord exits)

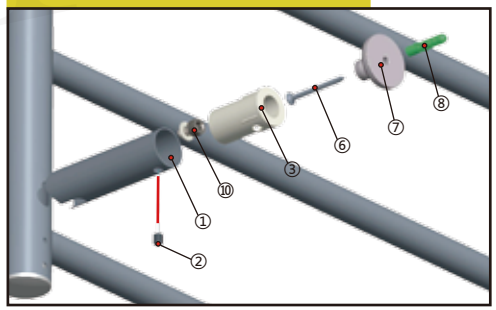

PREP UNIT!

INSTALL LEGS

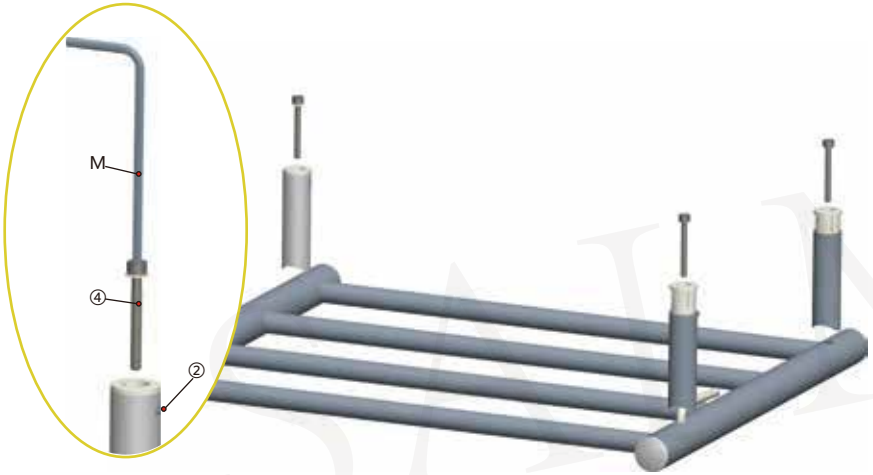

Attach the 3 Leg Mounts ① by inserting the Long Led Bolts ④ and their washers into the Leg Inserts ③ side of the leg and securing to the warmer using the Large Hex Key M .Make sure the Set Screw ② faces towards the bottom of the warmer.Add additional washers if the leg is not tight against the unit.

ATTACH POWER LEG

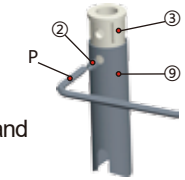

1. Remove Leg Insert

Remove the Leg Insert ③ from the Power Leg Mount ⑨ by unscrewing the Set Screw ② usingthe Medium Hex Key P and push out the insert from the other eng.

2. Attach Power Leg

Slide the Leg Grommet S all the way up the cord and align with the slot in the Power Leg Mount ⑨ .

If not already inserted,insert the Short Leg Bolt ⑩ and washer into the Power Leg Mount ⑨ and through the hole in the brachet near the other end.Using the Large Hex Key M into the welded bolt just above the power cord.The power cord should exit from the cutout.

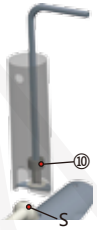

3. Reinstall Cap

Reinstall the Leg Inser ③ into the Power Leg Mount ⑨ and secure using the Set Screw ②.

MOUNT WARMER(PLUG-IN POTION)

FOR LEGS THAT WILL BE SCREWED INTO WALL STUDS

For the legs aligned with a wall stud,there is no need to drill a hole. simpiy place a Wall Scre ⑥ into a wall Flange ⑦ and screw directly through the drywall and into the stud until the Wall Flange ⑦ is snug against the wall.

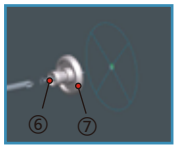

FOR LEGS THAT WILL ONLY BE SCREWED INTO DRYWALL

For legs that are not aligned with a stud,first drill a 7/32-inch hole through the drywall. Insert a Drywall Anchor ⑧ and tap it in with a hammer until flush with the wall. Now insert the Wall Screw ⑥ into the Wall Flange ⑦ and screw the flange into the Drywall Anchor ⑧ until the Wall Flange ⑦ is snug against the wall. Don't over tighten.

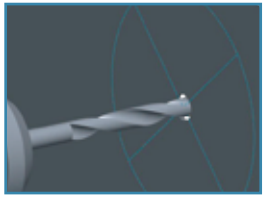

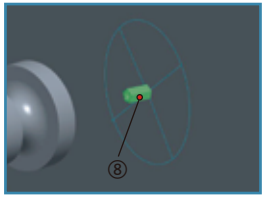

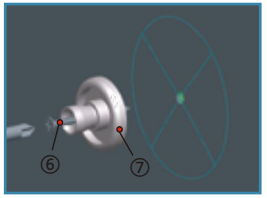

MOUNT WARMER ONTO FLANGES

SEAT LEGS INTO FLANGES

With the Wall Flanges ⑦ now installed on the wall,mount the unit onto the flanges until the legs are wall seated into the flanges.The Leg Set Screws ② under the legs may need to be loosened first.

SECURE SET SCREWS

While applying pressure on the unit to keep the legs firmly in the flanges, tighten each of the 4 set screws using the Medium Hex Key P until the legs are secure(do not over tighteen)

Plug the warmer into an available properly grounded 220-240V wall outlet and your warmer is ready for use. Please review page 12 for operating the warmer.

PARTS LIST !

REF	QTY	DESCRIPTION
①	4	Leg Mounts (leg for mounting the unit)
②	4	Leg Set Screws (anchors the leg Insert in the leg)
③	3	Leg Inserts (secures the leg to the wall flange)
④	3	Long Leg Bolt&Washer (secures leg to warmer)
⑤	4	Spare Washers (optionally added to bolts for fit)
⑥	4	Wall Screws (secures wall flange to wall)
⑦	3	Wall Flanges (fastens to the wall for mounting)

REF	QTY	DESCRIPTION
⑧	4	Drywall Anchors (used when installing in drywall)
⑨	1	Short Leg Bolt&Washer (secures leg to warmer)
⑩	1	Wall Bushing (conduit for wall power)
⑪	1	Power Wall Flange (allows power to enter wall cavity)
M	1	Medium Hex Key (used for set screws②)
P	1	Small Hex Key (used to install Accessory Hook)
S	1	Leg Grommet (protects the power cord)

PARTS / ASSEMBLY

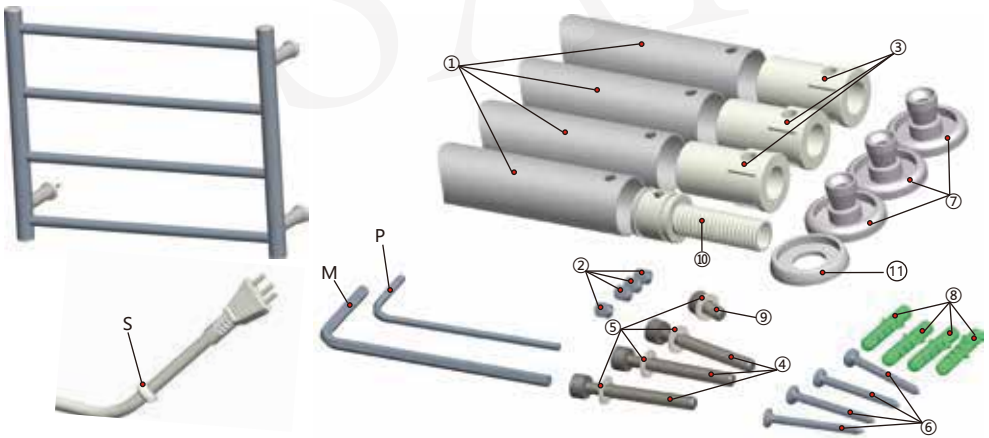

Leg Mounts (leg for mounting the unit)

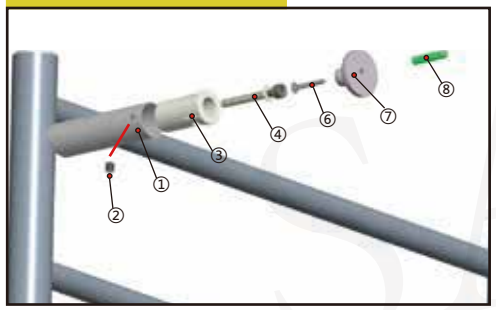

Wall Bushing (conduit for wall power)

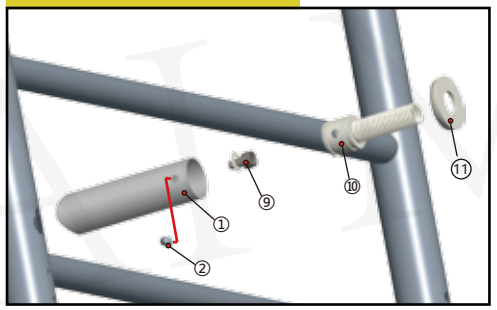

MOUNT WARMER(HARD-WIRED OPTION)

INSTALL POWER LEG FLANGE

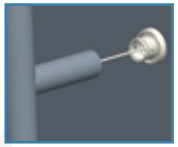

This only applies to the Power Leg Mount ① for the Hard-Wired option (bottom-right leg). The Wall Bushing ⑩ allows the Power Cord to be passed into the wall cavity for hard-wiring to your home's electrical wiring. **NOTE:** Before proceeding,make sue you have a plan for directing the power cord to an existing circuit. It may be necessary to use a fishing tool after drilling the 1/2" hole to pull the cord to a location for connecting to power(see page 10 for ideas).

After ensuring there are no obstructions behind the wall,drill a 1/2-in hole throught the drywall at the wall marking made earlier. Inset the Wall Bushing ⑩ throught the Power Wall Flange ⑪ and screw the bushing into the hole you drilled into the drywall.Screw the bushing until it's snug and the small holes in bushing are aligned vertically.

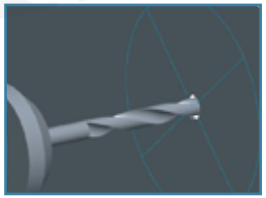

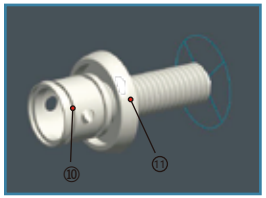

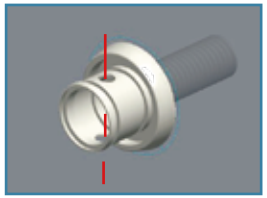

MOUNT WARMER(HARD-WIRED OPTION)

THREAD POWER CORD THROUGH LEG

Remove the Power Leg Mount ① using the Large Hex Key M Cut the power cord near the plug and pull off the Leg Grommet. Thread the cord throught the power leg.Insert Short Leg Bolt ⑨ and washer from the opposite end through the internal brachet. Now secure the power leg to the warmer by tightening the bolt using the Large Hex Key M .If the leg does not get tight enough,add washer as required.

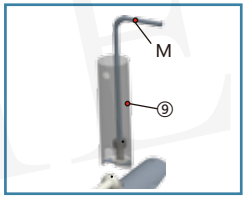

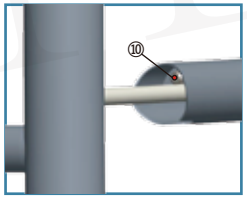

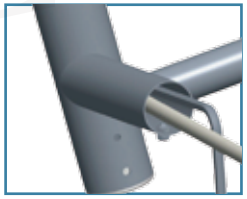

NOTE: Before proceeding to the next step,make sure you have a way to access the power cord from inside the wall and pull it to a existing power source.It may be necessary to first remove the Wall Bushing ⑩ to aid in fishing the wire . Please read to the seweral pages for ideas.

MOUNT WARMER(HARD-WIRED OPTION)

INSERT POWER CORD

While holding the warmer near the wall, insret the power cord through the Wall Bushing ⑩ and pull the cord tight from within the wall cavity.(see the next pages for ideas on connecting the power cord to power inside the wall)

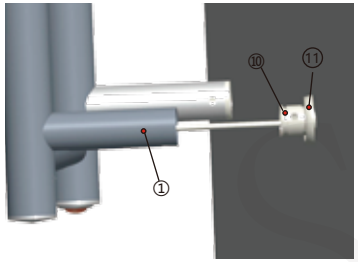

MOUNT WARMER ON WALL

Position all the legs onto their respective flanges and press the warmer firmly into the flanges. While applying pressure, tighten each of the 4 Set Screws ② using the Medium Hex Key P until the legs are secure (do not over tighten)

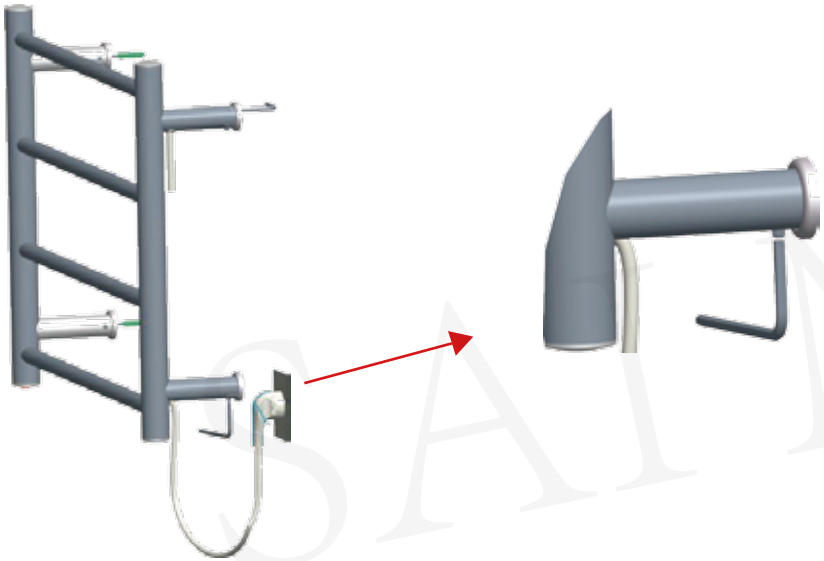

IN-WALL ACCESS （HARD-WIRED OPTION）

SAME WALL CONNECTION

If there is an outlet or switch on the same wall as the warmer,it can be used to connect the warmer's power.Once the outlet or switch has been temporarily removerd from its junction box,a fishing tool can be used to draw the unit's power cord to the outlet or swith.If neither an outlet or switch is available, a hole can be cut into the drywall to "splice" into a circuit. Once the connection is made,the hole can be patched to provide a clean installation.Always use a junction box for all connections,Do not connect to a circution that turns on and off when a switch is toggled.

Connect to a wall Outlet

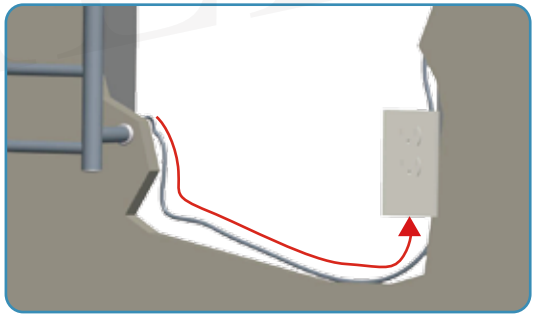

Connect to a wall switch

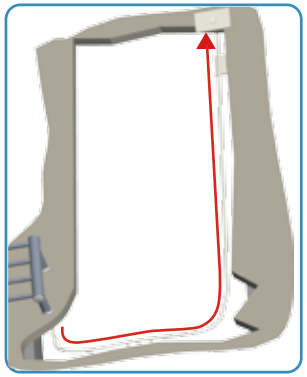

OPPOSITE WALL CONNECTION

Also consider using the opposite side of the wall for connecting the warmer to an existing outlet or light switch on either side. If there's any difficulty in fishing the power cord,a temporary hole can be out directly opposide of the Wall Bushing ⑩ to better direct the power cord to its desired destination, especially if dirlling into a stud is necessary.

Connect to a wall Outlet

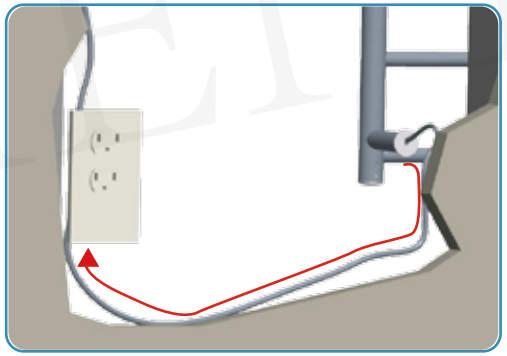

Connect to a wall switch

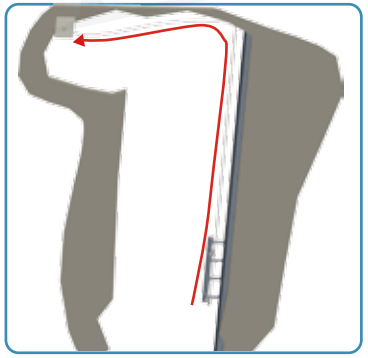

Caution: The user is cautioned that changes or modifications not expressly approved by the party responsible for compliance could void the user's authority to operate the equipment.
This device complies with Part 15 of the FCC Rules. Operation is subject to the following two conditions: (1) this device may not cause harmful interference, and (2) this device must accept any interference received, including interference that may cause undesired operation.

NOTE: This equipment has been tested and found to comply with the limits for a Class B digital device, pursuant to Part 15 of the FCC Rules. These limits are designed to provide reasonable protection against harmful interference in a residential installation. This equipment generates, uses and can radiate radio frequency energy and, if not installed and used in accordance with the instructions, may cause harmful interference to radio communications. However, there is no guarantee that interference will not occur in a particular installation.
If this equipment does cause harmful interference to radio or television reception, which can be determined by turning the equipment off and on, the user is encouraged to try to correct the interference by one or more of the following measures:
-- Reorient or relocate the receiving antenna.
-- Increase the separation between the equipment and receiver.
-- Connect the equipment into an outlet on a circuit different from that to which the receiver is connected.
-- Consult the dealer or an experienced radio/TV technician for help.

FCC Radiation Exposure Statement
This equipment complies with FCC radiation exposure limits set forth for an uncontrolled environment. This equipment should be installed and operated with a minimum distance of 20cm between the radiator and your body.
This transmitter must not be co-located or operating in conjunction with any other antenna or transmitter.

SALMELITE
SALMELITE