Bluetooth audio

Operation manual

FCC STATEMENT

This equipment has been tested and found to comply with the limits for a Class B digital device, pursuant to part 15 of the FCC Rules. These limits are designed to provide reasonable protection against harmful interference in a residential installation. This equipment generates, uses and can radiate radio frequency energy and, if not installed and used in accordance with the instructions, may cause harmful interference to radio communications. However, there is no guarantee that interference will not occur in a particular install ation. If this equipment does cause harmful interference to radio or television reception, which can be determined by turning the equip ment off and on, the user is encouraged to try to correct the interfer ence by one or more of the following measures:

- Reorient or relocate the receiving antenna.
- Increase the separation between the equipment and receiver.
- Connect the equipment into an outlet on a circuit different from that to which the receiver is connected.
- Consult the dealer or an experienced radio/TV technician for help.

Caution: Any changes or modiflcations to this device not explicitly appro ved by manufacturer could void your authority to operate this equipment. This device complies with part 15 of the FCC Rules. Operation is subject to the following two conditions:

(1) This device may not cause harmful interference, and

(2) this device must accept any interference received, including interfere nce that may cause undesired operation.

RF EXPOSURE INFORMATION

The device has been evaluated to meet general RF exposure requirement. The device can be used in portable exposure condition without restriction.

Function Introduction

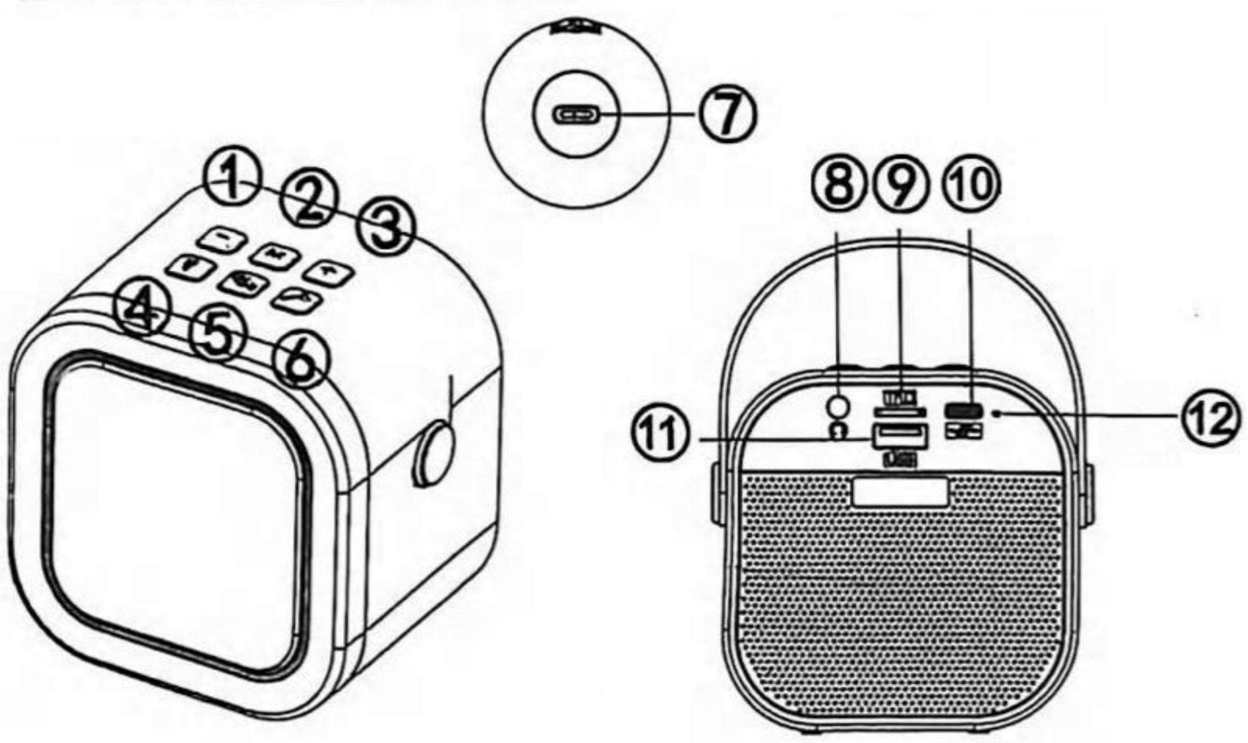

1. Short Press once for volume reduction, long press once for volume reduction.
2. Manual Switch Play mode, Bluetooth/TF card/U disk, etc. .
3. Short Press once to add volume, long press once.
4. Short Press to switch the LED lighting effect, long press 2 seconds to turn off the LED lighting effect.
5. Long press 3 seconds to turn on/off, short press play/pause, double click to turn on/off couplets.
6. Short Press to turn on/off sound cancellation.
7. Microphone Type-C 5V charging port.
8. Headphone jack.
9. TF slot, insert MP3 audio class file automatically switch to TF mode.
10. Audio Type-C 5V charging interface.
11. USB plug-in with MP3 audio class files automatically switch to USB mode.
12. Audio Indicator Light, blue light flicker when not connected, blue light will be on when connected successfully, red light will be on when charging, red light will be off when full.

Product Information

- Product name: Bluetooth audio
- Product Model: K12
- Implementation Standard: GB-T9254.1-2021
- OUTPUT POWER: 5W
- Input Signal: 42DB
- Battery: High Performance High Capaci Lithium battery
- Charging voltage: DC5V
- Frequency range: 90Hz-18KHz
- Power mode: DC charging and built-in Battery

major function

- High reduction electro-acoustic system
- 3.7 V high performance battery
- Sound penetration, wide coverage
- Super MP3 audio decoding technology
  All digital audio processing, clear voice
- quality, high sensitivity

Charging Connection Diagram

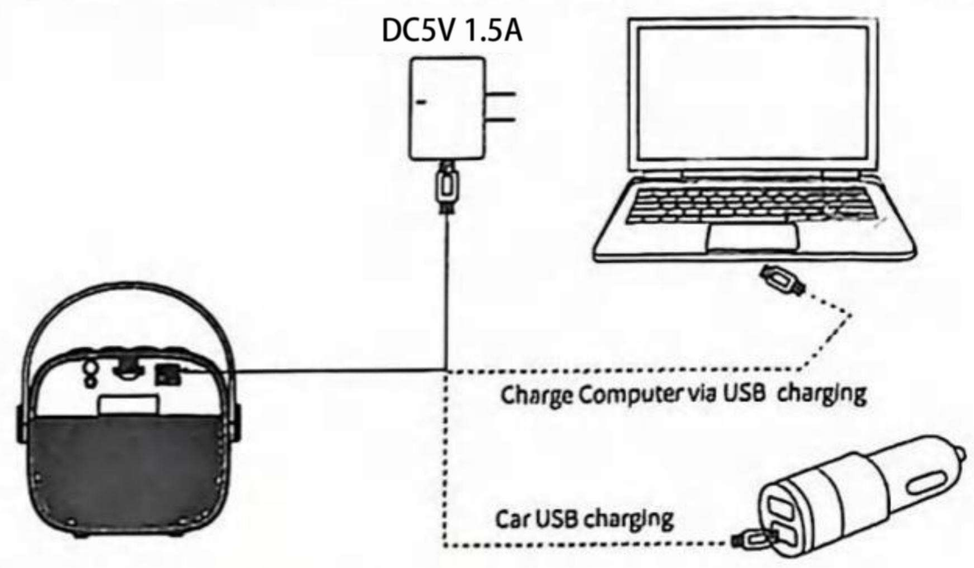

Common problem handling

1. If the indicator light does not turn on, please check whether the audio power is sufficient, or to connect the audio to 5V/1A power supply for charging, charging time is about 3 to 4 hours.
2. There is no sound in the microphone. The power supply is not on, the mode is not correct, or the volume is not adjusted. Please adjust the volume of the microphone.
3. If the stereo does not have reverb, the reverb switch may be off, please turn on the reverb switch.
4. If the microphone is noisy, it may be due to ambient noise, signal interference, microphone too close to the speaker, etc. , please re-adjust the direction of the microphone.
5. If Bluetooth playback is interrupted, it may be because the Bluetooth is too far away, or there is an obstacle between the phone and the loudspeaker, affecting the signal transmission, please close to the connected phone, avoid the obstacle.
6. If Bluetooth can not be connected, it may be because the distance is too far, there are obstacles, or by other phones connected, please close to the phone to avoid obstacles, disconnect the phone.
7. If you can not charge, check whether the charger is normal, audio charging, the charging port of the red light is on.

Service and Warranty

Warranty terms and conditions:
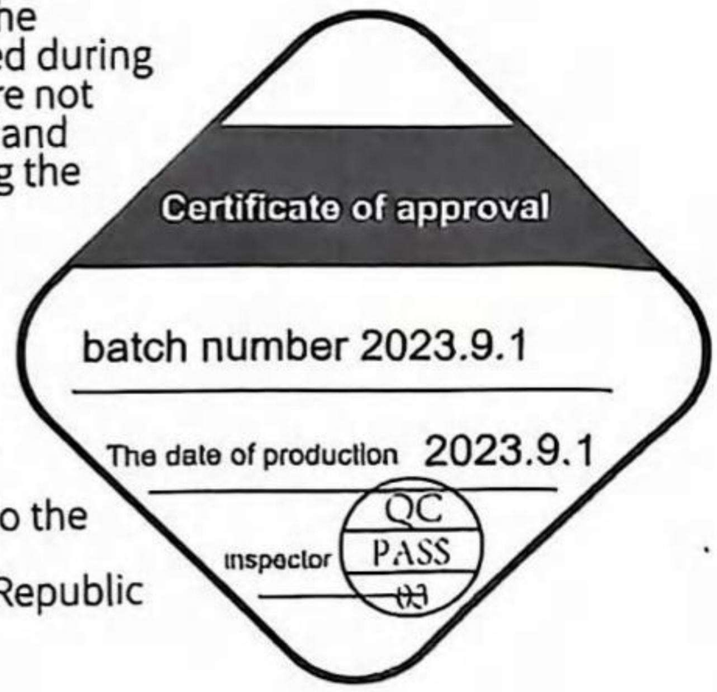
1. If the product has any function problem, can enjoy the warranty service, the warranty period is 12 months.
2. Man-made damage, broken, artificial scratch, no warranty card is not within the scope of the warranty.
3. Customer must fill in all necessary information (such as customer's name, address, telephone number, date of purchase, etc.)
4. We are responsible for the maintenance costs incurred during the warranty period. We are not responsible for the freight and other costs incurred during the warranty period.
5. Warranty services need to have a warranty card and according to the requirements of the operation can be guaranteed, otherwise no warranty.
6. This product conforms to the regulations and technical standards of the People's Republic of China.