If you have any problem, please feel free to contact us

Intelligent LED Bathroom Mirror

Installation Instructions

⚠Note: After opening the package, please immediately check the product for any damage or missing parts in transit. If anything is missing, please contact us. This document describes how to install and maintain devices.

PACKING LIST

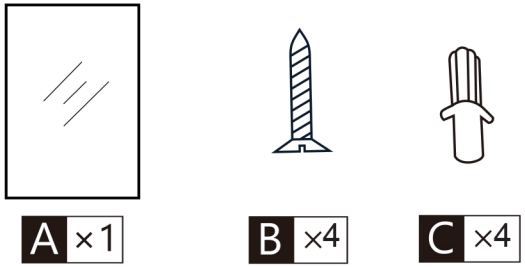

INSTALLATION TOOLS

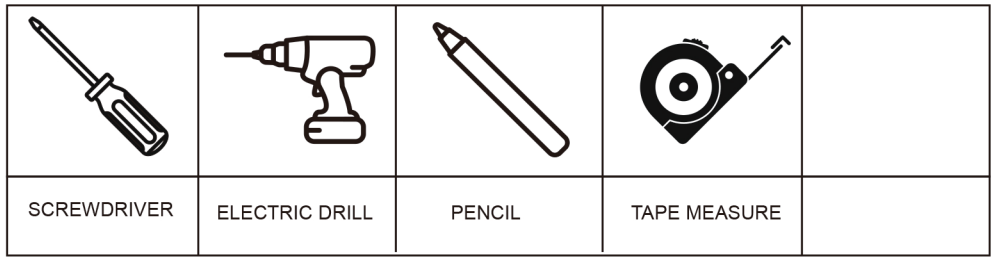

BEFORE INSTALLATION

⚠ Congratulations on your purchase of the Smart LED light mirror. Please read these instructions carefully before starting installation.

1. The voltage range of this product is 220V.
2. You can connect the wire from the back center of the mirror directly to your electrical connection box or plug.
3. Use the product with care to prevent the sides and edges of the glass from being impacted.
4. Before drilling, ensure that there are no hidden pipes and cables in the wall.
5. Ensure that the fixed position can support the weight of the whole accessories. (solid stone/brick wall)
6. Disconnect the power supply before installing, adding, or replacing any component.
7. It is recommended that the installation be carried out by qualified technical personnel.
8. Wear proper eye protection when drilling. Be careful when using power tools near the water.
9. It is recommended that at least two persons perform the installation together.

INSTALLATION INSTRUCTIONS

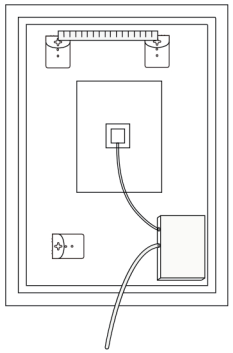

01

Measure the center distance between two hooks

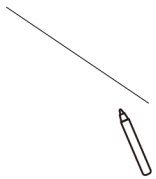

02

Measure the mounting height and
draw a horizontal line on the wall.
According to the measured data
Then mark the position of the screw hole

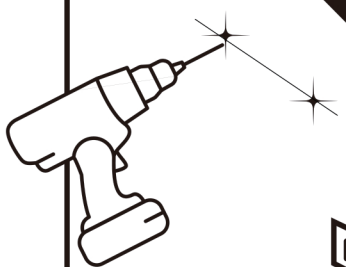

03

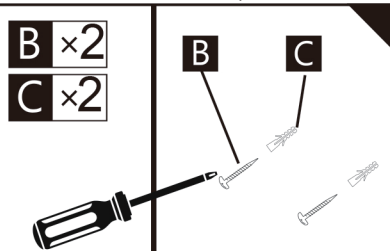

04

INSTALLATION INSTRUCTIONS

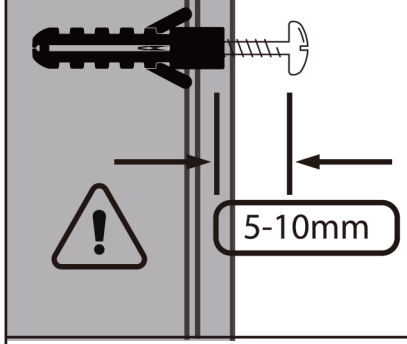

05

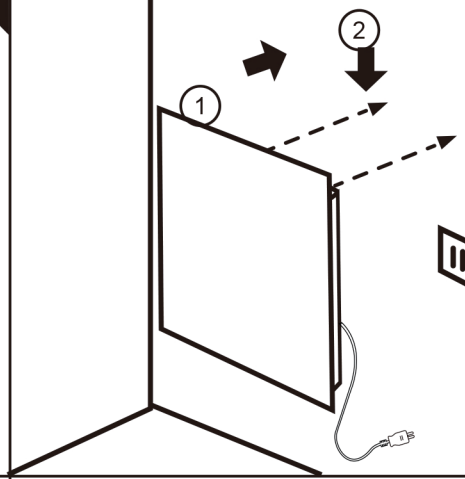

06

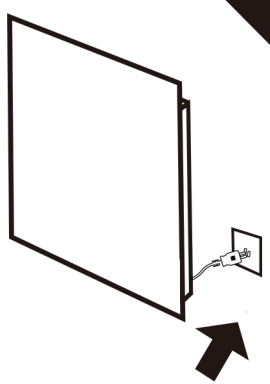

07-1

plug goes directly
into the socket

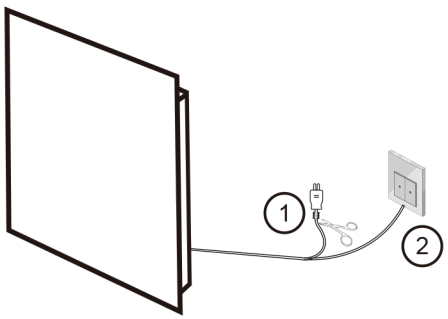

07-2

1.Cut the plug off
2.Connect the wire to the wall switch

FUNCTION DESCRIPTION

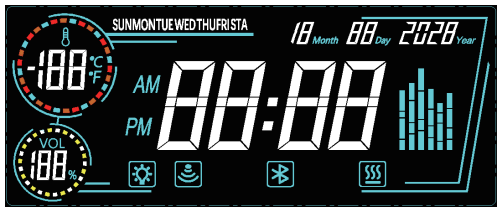

①DOWN	②UP	③BT	④SET	⑤DF	⑥POWER
PREV	NEXT	Bluetooth music	Settings	Defogging	Light/power ON/OFF

①DOWN: In Bluetooth mode,
short press to play the PREV, long press to decrease the volume. In clock setting mode, short press to decrease the current setting value by 1, and in configuration setting mode, short press to toggle the configuration value.

②UP: In Bluetooth mode,
short press to play the NEXT, long press to increase the volume. In clock setting mode, short press to increase the current setting value by 1, and in configuration setting mode, short press to toggle the configuration value.

③BT: Short press to turn ON/OFF the Bluetooth function.
In Bluetooth music playing mode, long press to pause or play, and during a call, long press to answer or end the call.

④SET: Long press to enter the setting mode,
short press again to switch between setting options: (CL) Clock → (HU) 12/24-hour format → (tP) Celsius(℃)/Fahrenheit(℉) display → (To) key tone → (Ut) software version number.

⑤DF: Short press to turn ON/OFF defogging.

⑥POWER:

Short press to turn on the lamp (cold light), and short press again within 5 seconds to switch the color temperature neutral light warm light turn off the lamp.
After 5 seconds, short pressing again will directly turn off the light without switching the color temperature. In the lamp-on state, long press for infinite dimming. When the brightness is adjusted to the darkest or brightest, it needs to be released and pressed again to reverse the dimming. In the lamp-off state, long press to turn off the screen, and Bluetooth music and defogging will also be turned off at the same time.

SAFETY INSTRUCTIONS AND WARRANTY

pre-installed

If any parts are missing or damaged, compare all parts with those listed in the package contents section. Do not install or use this lamp. Contact customer service.

Warning: Danger of electric shock

- Turn off the power on the fuse or circuit breaker box before connecting the wiring fixture to power.
- After the mirror turns on the light for 1 hour, the system will turn on the circuit protection and automatically turn off the light, which can be turned on again by the touch screen switch
- Turn off the power for any maintenance.
- Check whether the power supply voltage is correct by referring to the label information of the lamp.
- Electrical and grounding connections are made in accordance with the national Electrical code and any applicable local code requirements.
- All wiring connections shall be UL certified wire connectors.

Caution: Danger of injury

- Gloves and safety glasses should be worn when removing, installing, repairing or maintaining the luminaire from the carton.
- Avoid direct eye contact with light source when powering on.
- Consider small parts and destroy packaging materials as these can be harmful to children. The mirror is very heavy. Let the rescuers pick it up. Two people performing this installation is the easiest.

Warning: Risk of burn

- Allow clamp to cool before handling. Do not touch the shell or light source.
- Follow all lamps manufacturer's warnings, recommendations and restrictions, including drive type, lighting location, installation location method, replacement and recycling.

Product warranty

Product warranty from the date of purchase, manufacturer warranty for one year. If you have any questions, please feel free to contact us. We'll give you a satisfactory solution

This device complies with Part 15 of the FCC Rules. Operation is subject to the following two conditions: (1) this device may not cause harmful interference, and (2) this device must accept any interference received, including interference that may cause undesired operation

NOTE: This equipment has been tested and found to comply with the limits for a Class B digital device, pursuant to Part 15 of the FCC Rules. These limits are designed to provide reasonable protection against harmful interference in a residential installation. This equipment generates, uses and can radiate radio frequency energy and, if not installed and used in accordance with the instructions, may cause harmful interference to radio communications. However, there is no guarantee that interference will not occur in a particular installation.
If this equipment does cause harmful interference to radio or television reception, which can be determined by turning the equipment off and on, the user is encouraged to try to correct the interference by one or more of the following measures:
-- Reorient or relocate the receiving antenna.
-- Increase the separation between the equipment and receiver.
-- Connect the equipment into an outlet on a circuit different from that to which the receiver is connected.
-- Consult the dealer or an experienced radio/TV technician for help.

Warning: changes or modifications not expressly approved by the party responsible for compliance could void the user's authority to operate the equipment

Radiation Exposure Statement
This equipment complies with FCC radiation exposure limits set forth for an uncontrolled environment.
This equipment should be installed and operated with minimum distance 20cm between the radiator and your body.