Installation Instructions for

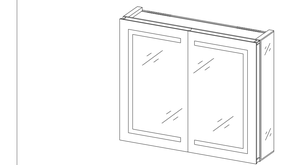

Led Mirror Cabinet

Before installation • • • • • • • P1

Tools and Materials • • • • • • • P1

(Installation steps)

Aluminum LED medicine cabinet • • • P2

Wiring Diagram • • • • • • • P3

Bluetooth manual • • • • • • • P4

Bluetooth manual • • • • • • • P5

Product Use • • • • • • • P6

How to adjust the hinge • • • • • • • P7

Preventive measures • • • • • • • P7

Before installation:

Note: To ensure general use of this product please follow the installation instructions carefully. Product Must be installed indoors and on a suitable load bearing wall. Installation should be done by a licensed contractor and/or electrician.

- Please read this guide carefully to familiarize yourself with the tools, materials and installation procedures required. Please follow the applicable to avoid unnecessary damage due to improper installation, please install this product in accordance with the following sections. In addition to the chapter on proper installation, the be sure to read all operating and safety instructions in addition to the installation instructions.
- This guide also contains important information about maintenance, cleaning and warranties that users should keep.
- Before installation, carefully inspect the product for damage.

⚠ WARNING: There may be a risk of injury to persons or damage to the product.

⚠ WARNING: Surfaces should not contain acidic or alkaline cleaners and alcohol, clean with a wet cloth.

⚠ WARNING: Risk of electric shock. May require rewiring.

Tools and Materials:

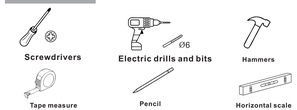

This manul is suitable for aluminum LED medicine cabinet:

Installation Instructions:

Fig①: Unpack the "E" and "F" mounting brackets.
Fig②: Install the "F" bracket in the horizontal position using the "A" anchor and "B" screw.
Fig③: Lift the medicine cabinet and securely place the "F" bracket as shown in the illustration.
Fig④: Hold the cabinet in the upright position and securely fasten the "E" bracket in the grove on top of the cabinet.
Fig⑤: Use "A" anchor and "B" screw through the mounting hole to secure the "E" bracket to the wall.
Fig⑥: Insert the provided shelf clips (C1/C2/D) into the round holes on both sides of the cabinet.
Fig⑦: After installing the shelf clips, insert the glass shelve(s).

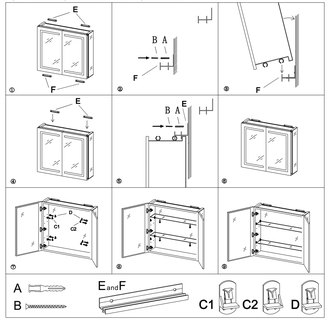

Wiring Diagram:

Wiring diagram for input terminal

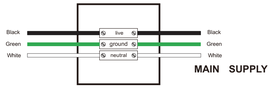

Electronic Diagram

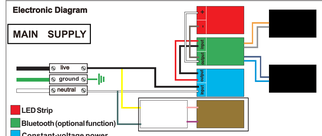

CAUTION:
During operation of this product, never use hard or sharp objects directly against the mirror surface, as it may result in damage and/or personal injury. Clean the product with a soft cloth and mild detergent only. Do not use abrasives, chemical cleaners, or leave any solutions on the surface such as soup, shampoo, etc. as they may damage the mirror.

Blue Screen Bluetooth Function For Led Mirror Cabinet

A:BUTTON INSTRUCTIONS AND FUNCTIONALITY:

(1) The screen and buttons will have an automatic backlit display while powered on.

(2) Short Press the button ① to power on ,and short press button ① again , the light symbol button ⑤ **& lighting switch** button ⑤ will light up . Hold button ① for 3 seconds to power off.

(3)Short press the button ⑤ to control the lights on or off, the light will show on the screen while the lights are on. Long press after turning on to adjust the brightness of LED light.

(4)When the power is on, short press the button ⑦ to control the anti-fog function on or off, the anti-fog symbol will appear/disappear on the screen when the function is on/off. (The anti-fog function will turn off automatically after running for 65 minutes.)

B:Time ,Date and Temperature Settings:

(1) Press button ⑥ for 3 seconds to enter Time , Date and temperature setting mode. You will see the time has a choice of 12 or 24 hours function, and a choice of temperatures in Fahrenheit and Celsius function .

(2)When the Hour number is flashing, press ③ or ② to select 12H or 24H systems, and press ⑥ to confirm the selection . By pressing button ③ you can change between the Hour, Minute, Month,Day and Year numbers. Press button ③ to reduce or button ② to increase the numbers while they are flashing.

(3) When the temperature number is flashing, press ③ or ② to select Fahrenheit and Celsius ,and press ⑥ to confirm the selection.

NOTE: Bluetooth function must be disabled before changing settings.

C:Connecting Bluetooth

(1) To connect to Bluetooth press button ④ to open the Bluetooth function. The device is ready to connect when the screen displays "-b-" and makes a beep sound.

(2) Next search and connect to "Led Mirror Cabinet" from your smart device.

(3) Bluetooth connection is successful when the "-b-" on the screen stops flashing. Now you are ready to play your music.

NOTE: The Bluetooth function of this product supports connecting up to two devices at the same time, but one device will be automatically paused when the other device is playing.

D:Bluetooth Functions

(1) To skip songs press buttons ③ to return to the last song and press button ② to skip to the next song.

(2) To adjust the volume press button ② to select the volume setting. Once the volume on the screen starts flashing , press button ③ to reduce the volume and press button ② to increase the volume.

(3) Press button ④ to disconnect the Bluetooth function.

- **Keep this product away from strong magnetic fields, electrical fields and heated appliances.**
- **For the best connection keep your smart device within 6-12 feet from this product without any obstructions, such as walls or other electrical equipment.**
- **After disconnecting, the Bluetooth signal will not automatically reconnect.**

How to adjust the hinge:

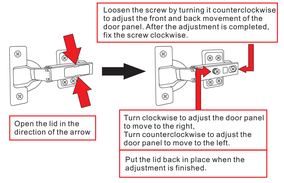

Precautions:

- Do not attempt to disassemble the product, as disassembly by non-professionals may result in product failure and loss of warranty benefits.
- Do not place the product in direct sunlight to avoid premature aging of electronic parts.
- Avoid placing the product near magnetic materials , which may affect its touch performance . Do not use fingernails or sharp objects to touch the touch screen , and do not wear gloves to touch the touch screen.
- Do not place other objects on the LCD screen to prevent crushing and damage to the screen.
- Keep this product away from rain or moisture.
- Avoid direct sunlight and keep the unit away from heat sources. Failure to do so may cause the device to fail to start and operate normally.

This device complies with part 15 of the FCC Rules. Operation is subject to the following two conditions: (1) This device may not cause harmful interference, and (2) this device must accept any interference received, including interference that may cause undesired operation.

Any Changes or modifications not expressly approved by the party responsible for compliance could void the user's authority to operate the equipment.

Note: This equipment has been tested and found to comply with the limits for a Class B digital device, pursuant to part 15 of the FCC Rules. These limits are designed to provide reasonable protection against harmful interference in a residential installation. This equipment generates uses and can radiate radio frequency energy and, if not installed and used in accordance with the instructions, may cause harmful interference to radio communications. However, there is no guarantee that interference will not occur in a particular installation. If this equipment does cause harmful interference to radio or television reception, which can be determined by turning the equipment off and on, the user is encouraged to try to correct the interference by one or more of the following measures:

-Reorient or relocate the receiving antenna.

-Increase the separation between the equipment and receiver.

-Connect the equipment into an outlet on a circuit different from that to which the receiver is connected.

-Consult the dealer or an experienced radio/TV technician for help.

FCC Radiation Exposure statement

The device has been evaluatec to meel general RF exposure requirement. The device can be used in porlable exposure condition without restriction.