产品规格承认书

SPECIFICATIONS

客户:

CUSTOMER: _____

产品名称:

DESCRIPTION: 单级蓝牙天线

客户型号:

CUSTOMER PART No: _____

产品型号:

OUR MODEL NO: **3216DA01**

日期:

DATE: 2020/12/22

确认签字,盖章后请返回承认书一份

PLEASERETRUV TO US ONE COPY OF "SPECIFICATION FOR APPROVAL"

WITY YOUR APPROVED SIGNATURES

核准	高阳	审核	宋杰	制作	江表强

客户承认签印	
日期	

UNLESS OTHER SPECIFIED TOLERANCES ON: X=± X.X=± X.XX= ANGLES =± HOLEDIA =±		深圳市翎坤科技有限公司	
SCALE：N/A	UNIT：mm	THESE DRAWINGS AND SPECIFICATIONS ARE THE PROPERTY OF LINGKUN TECHNOLOGY Limited AND SHALL NOT BE REPRODUCED OR USED AS THE BASIS FOR THE MANUFACTURE OR SALE OF APPARATUS OR DEVICES WITHOUT PERMISSION	
DRAWN BY : Sera	CHECKED BY: XD		
DESIGNED BY: Sera	APPROVED BY: XD		
TITLE：CHIP2450-3216 Specification		DOCUMENT NO. 3216	SPEC REV. P1

3216DA01 Specification

Operating Temp. : -40℃~+85℃

1. FEATURES:

- Light weight, compact
- Wide bandwidth, low cost
- Built-in antenna with high gain

2. APPLICATIONS:

- Bluetooth, Wireless LAN, Mobile TV
- Home RF System, etc

3. PRODUCT IDENTIFICATION

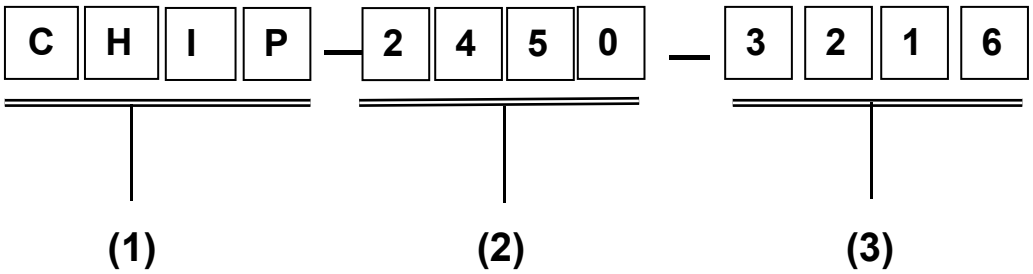

(1) Product type: Multilayer chip Antenna
(2) Center Frequency: 2450MHz
(3) External Dimensions (L×W) (mm): 3.2*1.6

4. SHAPE AND DIMENSIONS:

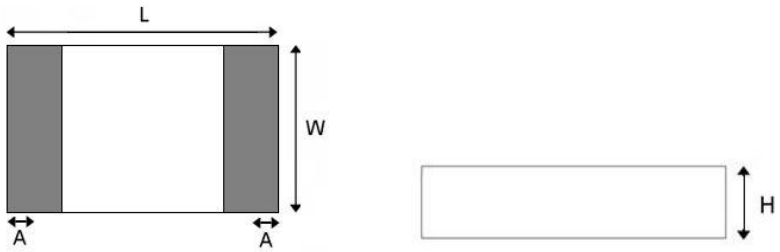

L	W	H	A
3.2±0.2	1.6±0.2	0.75±0.1	0.4±0.1

UNLESS OTHER SPECIFIED TOLERANCES ON: X=± X.X=± X.XX= ANGLES =± HOLEDIA =±		深圳市翎坤科技有限公司	
SCALE：N/A	UNIT：mm	THESE DRAWINGS AND SPECIFICATIONS ARE THE PROPERTY OF LINGKUN TECHNOLOGY Limited AND SHALL NOT BE REPRODUCED OR USED AS THE BASIS FOR THE MANUFACTURE OR SALE OF APPARATUS OR DEVICES WITHOUT PERMISSION	
DRAWN BY : Sera	CHECKED BY: XD		
DESIGNED BY: Sera	APPROVED BY: XD		
TITLE：CHIP2450-3216 Specification		DOCUMENT NO.	3216	SPEC REV. P1

Test board reference size:

Unit：**mm**

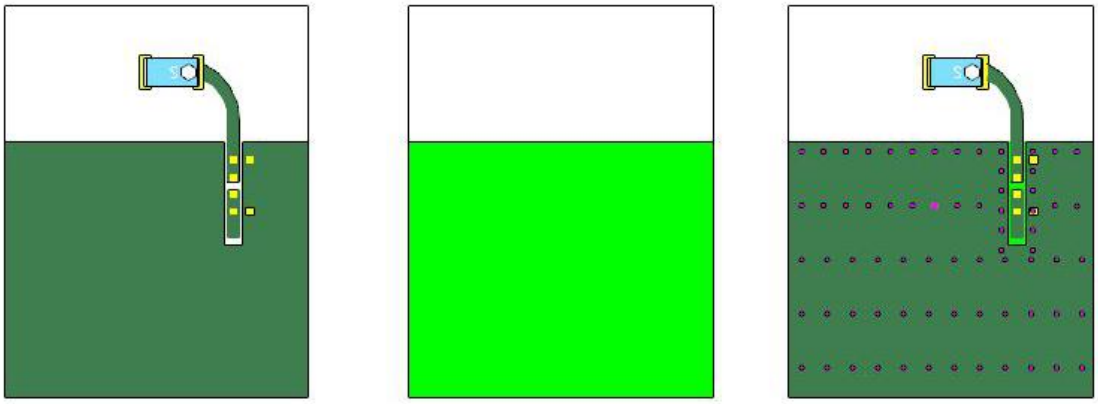

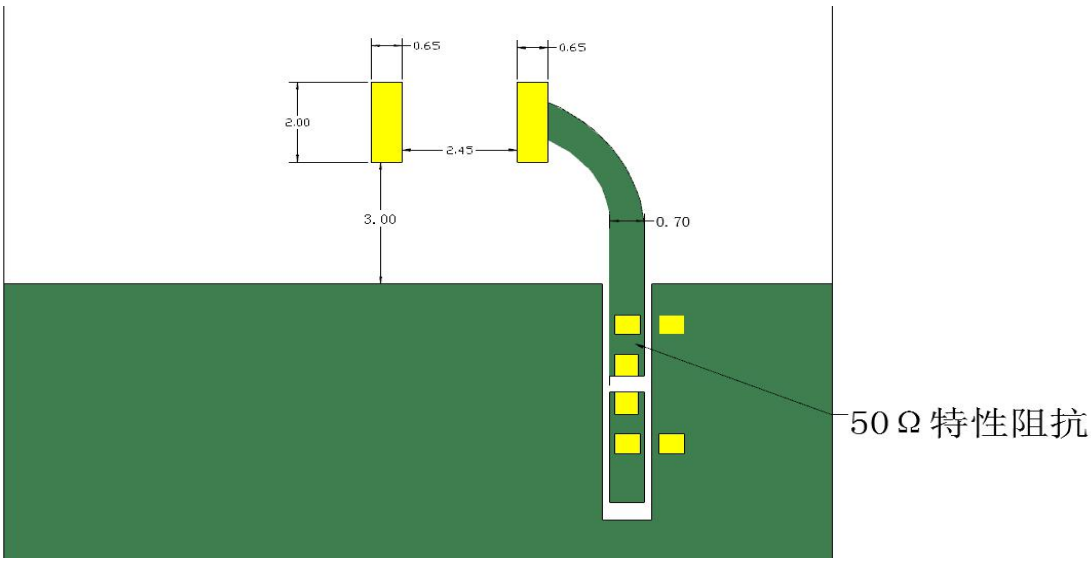

UNLESS OTHER SPECIFIED TOLERANCES ON: **X=±** **X.X=±** **X.XX=** **ANGLES =±** **HOLEDIA =±**		深圳市翎坤科技有限公司	
SCALE：N/A	**UNIT：mm**	THESE DRAWINGS AND SPECIFICATIONS ARE THE PROPERTY OF LINGKUN TECHNOLOGY Limited AND SHALL NOT BE REPRODUCED OR USED AS THE BASIS FOR THE MANUFACTURE OR SALE OF APPARATUS OR DEVICES WITHOUT PERMISSION	
DRAWN BY : Sera	**CHECKED BY: XD**		
DESIGNED BY: Sera	**APPROVED BY: XD**		
TITLE：CHIP2450-3216 Specification		**DOCUMENT NO.** 3216	**SPEC REV.** P1

APPLICATION GUIDE

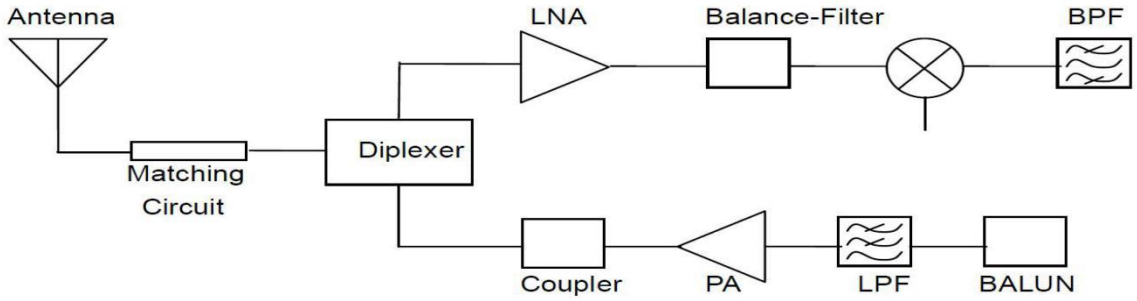

5. SPECIFICATIONS:

No.	Product number	3216DA01	
1	Central Frequency	2440	MHz
2	Bandwidth	100 (Min.)	MHz
3	Return Loss	-11.96 (Max.)	dB
4	Peak Gain	2.73	dBi
5	Impedance	50	Ω
6	Operating Temperature	-40~+85	℃
7	Maximum Power	5	W
8	Resistance to soldering heat	10 (@260℃)	Sec.
9	Polarization	Linear	
10	Azimuth Beam width	Omni-directional	
11	Termination	Sn (leadless)	

THESE DRAWINGS AND SPECIFICATIONS ARE THE PROPERTY OF LINGKUN TECHNOLOGY Limited AND SHALL NOT BE REPRODUCED OR USED AS THE BASIS FOR THE MANUFACTURE OR SALE OF APPARATUS OR DEVICES WITHOUT PERMISSION

6. Electrical Characteristics :

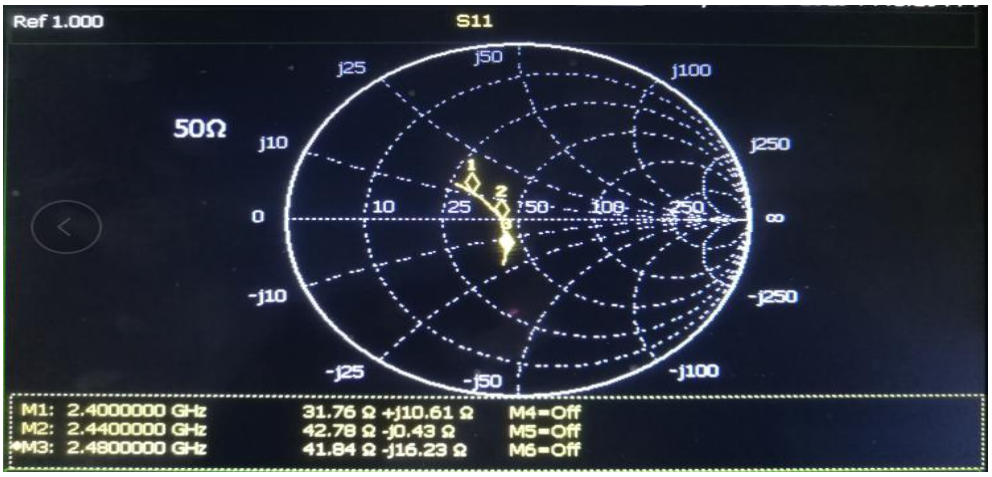

Frequency (MHz)	2400	2450	2500
Avg. Gain (dBi)	-1.83	-1.86	-2.97
Peck Gain (dBi)	2.7	2.58	1.34
Efficiency (%)	65.5	65.22	50.45

X-Y Plane

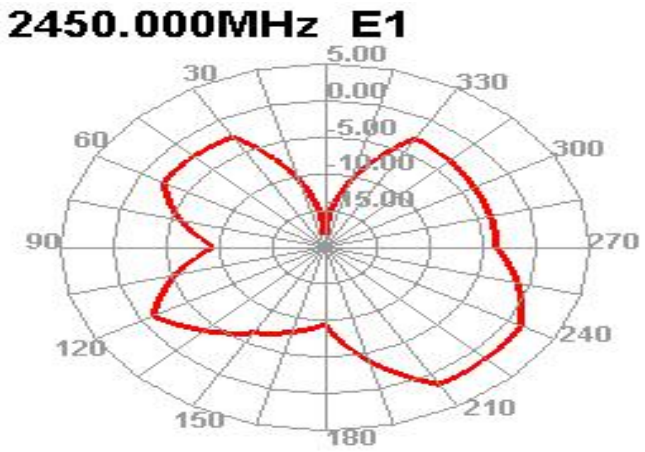

X-Y Plane

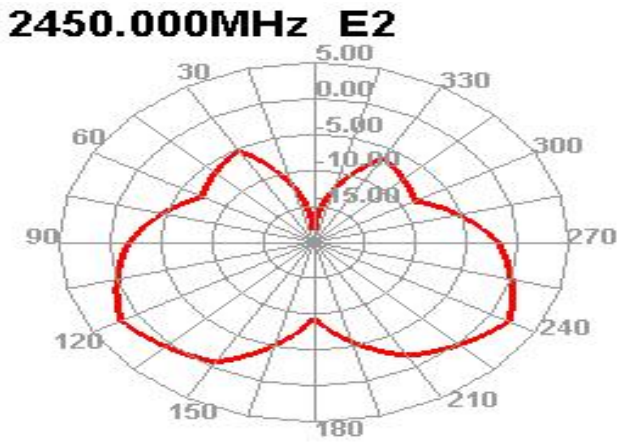

X-Y Plane

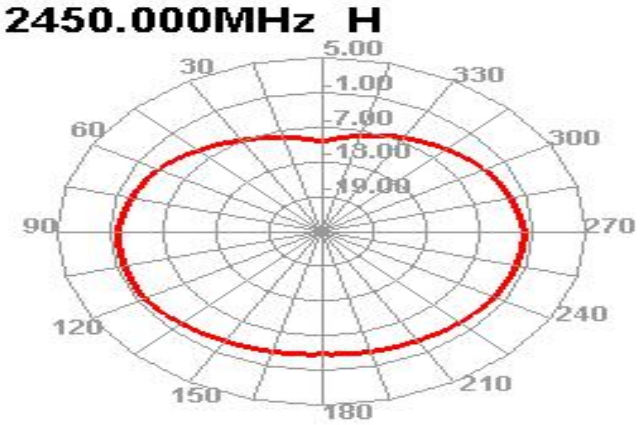

UNLESS OTHER SPECIFIED TOLERANCES ON: X=± X.X=± X.XX= ANGLES =± HOLEDIA =±		深圳市翎坤科技有限公司	
SCALE：N/A	UNIT：mm	THESE DRAWINGS AND SPECIFICATIONS ARE THE PROPERTY OF LINGKUN TECHNOLOGY Limited AND SHALL NOT BE REPRODUCED OR USED AS THE BASIS FOR THE MANUFACTURE OR SALE OF APPARATUS OR DEVICES WITHOUT PERMISSION	
DRAWN BY : Sera	CHECKED BY: XD		
DESIGNED BY: Sera	APPROVED BY: XD		
TITLE：CHIP2450-3216 Specification		DOCUMENT NO.	3216	SPEC REV. P1

3D Radiation Pattern

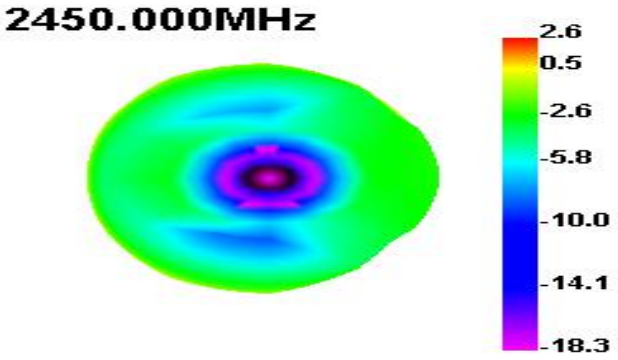

UNLESS OTHER SPECIFIED TOLERANCES ON: X=± X.X=± X.XX= ANGLES =± HOLEDIA =±		深圳市翎坤科技有限公司
SCALE：N/A	UNIT：mm	THESE DRAWINGS AND SPECIFICATIONS ARE THE PROPERTY OF LINGKUN TECHNOLOGY Limited AND SHALL NOT BE REPRODUCED OR USED AS THE BASIS FOR THE MANUFACTURE OR SALE OF APPARATUS OR DEVICES WITHOUT PERMISSION
DRAWN BY : Sera	CHECKED BY: XD	
DESIGNED BY: Sera	APPROVED BY: XD	
TITLE：CHIP2450-3216 Specification	DOCUMENT NO. 3216	SPEC REV. P1

7. Environmental Characteristics

(1) Reliability Test

Item	Condition	Specification
Thermal shock	1. 30±3 minutes at -40° C±5° C, 2. Convert to +105° C (5 minutes) 3. 30±3 minutes at +105° C±5° C, 4. Convert to -40° C (5 minutes) 5. Total 100 continuous cycles	No apparent damage Fulfill the electrical spec. after test.
Humidity resistance	1. Humidity: 85% R.H. 2. Temperature: 85±5° C 3. Time: 1000 hours.	No apparent damage Fulfill the electrical spec. after test.
High temperature resistance	1. Temperature: 150° C±5° C 2. Time: 1000 hours.	No apparent damage Fulfill the electrical spec. after test.
Low temperature resistance	1. Temperature: -40° C±5° C 2. Time: 1000 hours.	No apparent damage Fulfill the electrical spec. after test.
Soldering heat resistance	1. Solder bath temperature : 260±5℃ 2. Bathing time: 10±1 seconds	No apparent damage
Solderability	The dipped surface of the terminal shall be at least 95% covered with solder after dipped in solder bath of 245±5℃ for 3±1 seconds.	No apparent damage

(2) Storage Condition

(a) At warehouse:

The temperature should be within 0 ~ 30℃ and humidity should be less than 60% RH.

The product should be used within 1 year from the time of delivery.

(b) On board:

The temperature should be within -40~85℃ and humidity should be less than 85% RH.

(3) Operating Temperature Range

Operating temperature range : -40℃ to +105℃.

THESE DRAWINGS AND SPECIFICATIONS ARE THE PROPERTY OF LINGKUN TECHNOLOGY Limited AND SHALL NOT BE REPRODUCED OR USED AS THE BASIS FOR THE MANUFACTURE OR SALE OF APPARATUS OR DEVICES WITHOUT PERMISSION

8. Recommended Reflow Soldering

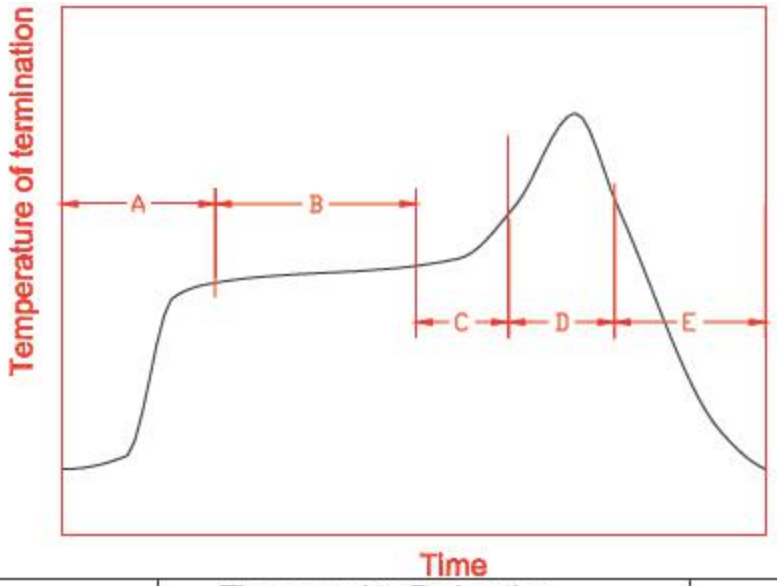

A	1st rising temperature	The normal to Preheating temperature	30s to 60s
B	Preheating	140℃ to 160℃	60s to 120s
C	2nd rising temperature	Preheating to 200℃	20s to 40s
D	Main heating	if 220℃	50s～60s
		if 230℃	40s～50s
		if 240℃	30s～40s
		if 250℃	20s～40s
		if 260℃	20s～40s
E	Regular cooling	200℃ to 100℃	1℃/s ～ 4℃/s

*reference: J-STD-020C

(1) Soldering Gun Procedure

Note the follows, in case of using solder gun for replacement.

(a) The tip temperature must be less than 350° C for the period within 3 seconds by using soldering gun under 30 W.

(b) The soldering gun tip shall not touch this product directly.

(2) Soldering Volume

THESE DRAWINGS AND SPECIFICATIONS ARE THE PROPERTY OF LINGKUN TECHNOLOGY Limited AND SHALL NOT BE REPRODUCED OR USED AS THE BASIS FOR THE MANUFACTURE OR SALE OF APPARATUS OR DEVICES WITHOUT PERMISSION

Note that excess of soldering volume will easily get crack the body of this product.

9. Taping Package and Label Marking: (unit: mm)

(1) Quantity/Reel: 5000pcs/Reel

(2) Carrier tape dimensions

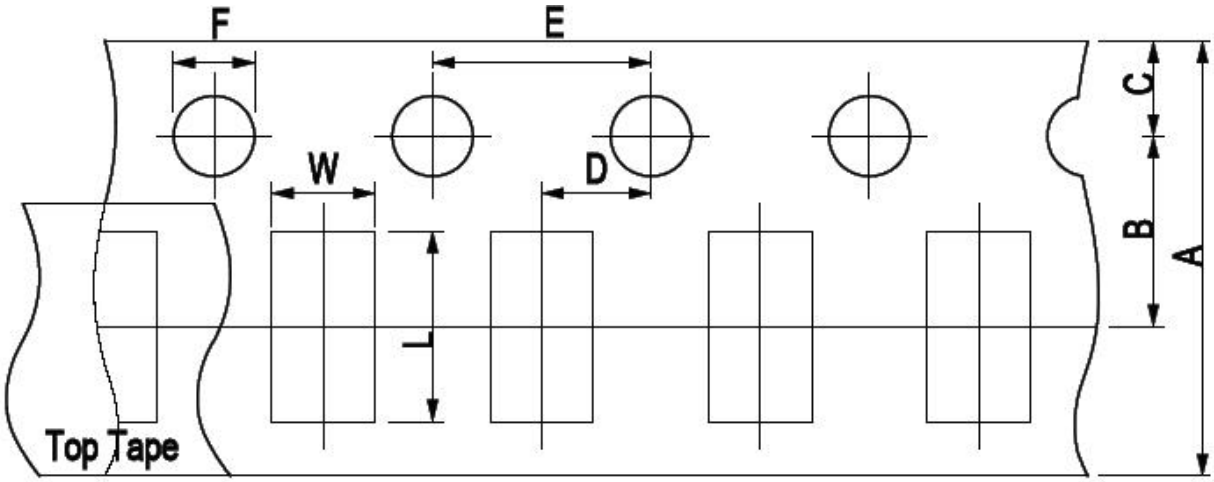

Type	A	B	C	D	E	F	L	W
2450-21	8.00±0.3	3.50±0.05	1.75±0.1	2.00±0.05	4.00±0.1	1.50±0.1	2.30±0.1	1.55±0.1

(3) Taping reel dimensions

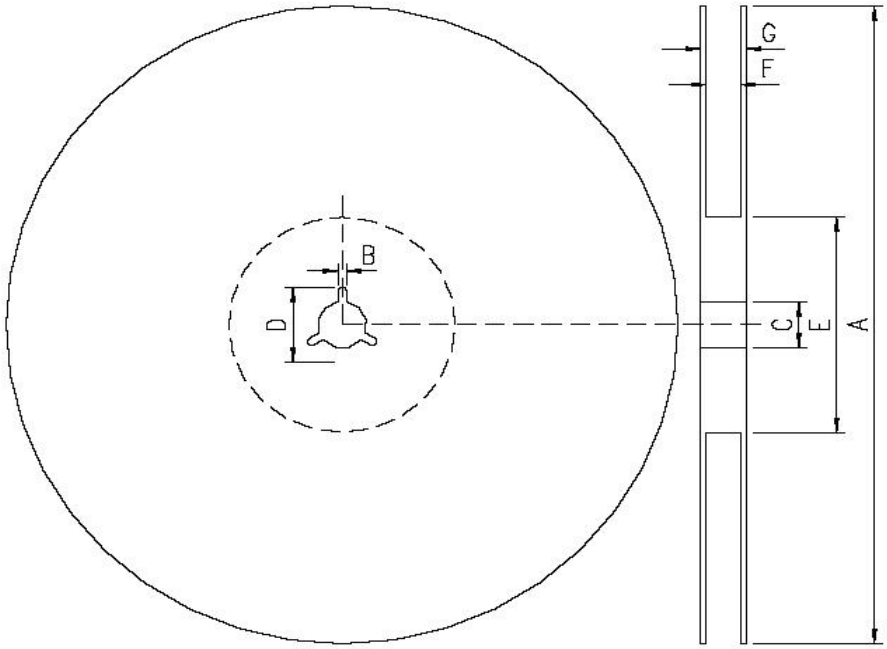

A	178.0±2.0
B	2.0±0.5
C	13.0±0.5
D	21.0±0.8
E	62.0±1.5
F	9.0±0.5
G	13.0±1.0