LOOX5

HÄFELE

Wireless Charger

833.73.822
833.73.823

	V	W	mm/in	T_A	Output Power	Standby Power
833.73.822	24 V	20 W	Ø58 x 23/ Ø2.2x0.9	-10°C – + 40°C +14°F – +104°F	max. 15 W	<0,3 W
833.73.823	12 V					

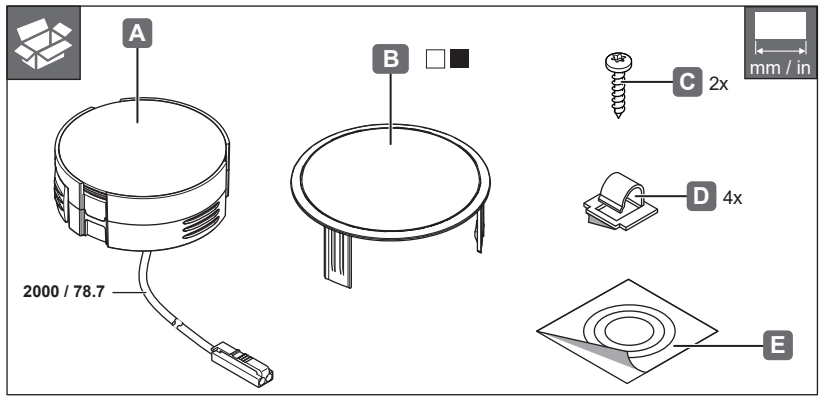

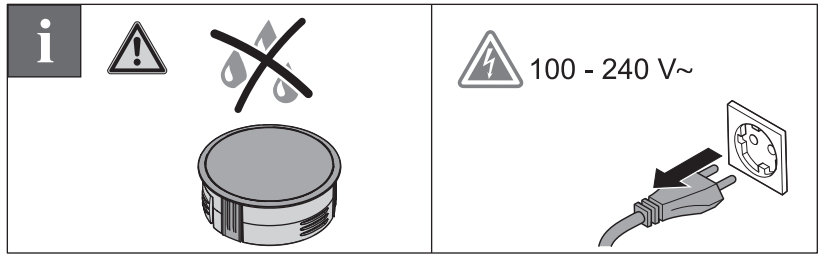

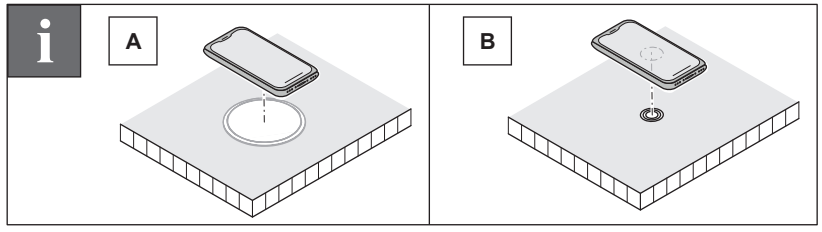

732.28.321

HDE 06.03.2024

HÄFELE

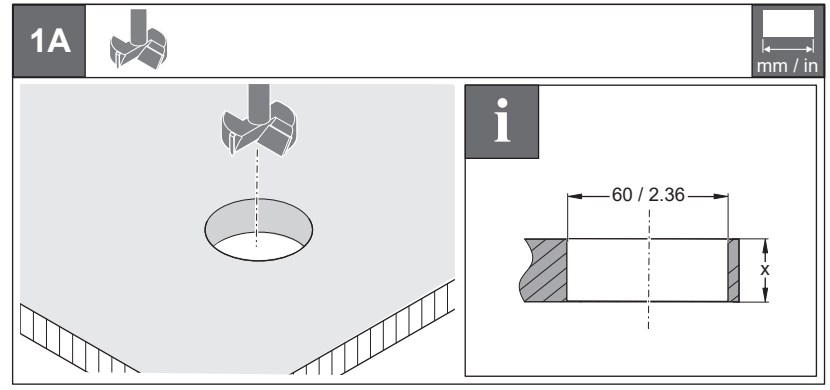

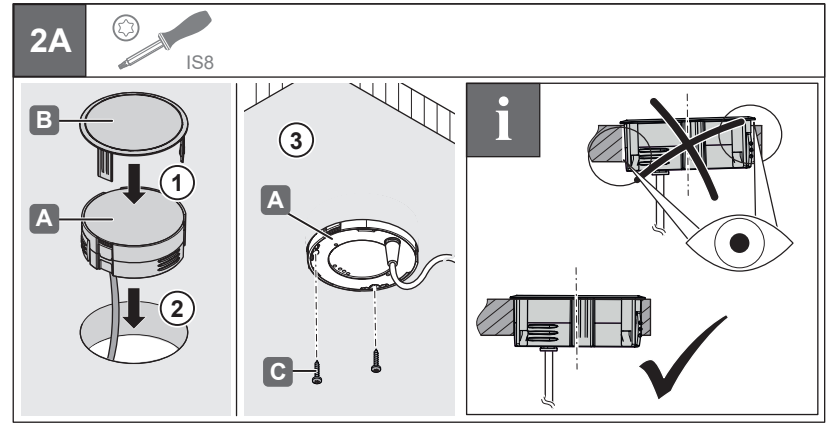

732.28.321

HDE 06.03.2024

IP20

Size:250x190mm
材质:128克书纸
印刷:黑色(白底黑字);双面印刷。

HÄFELE

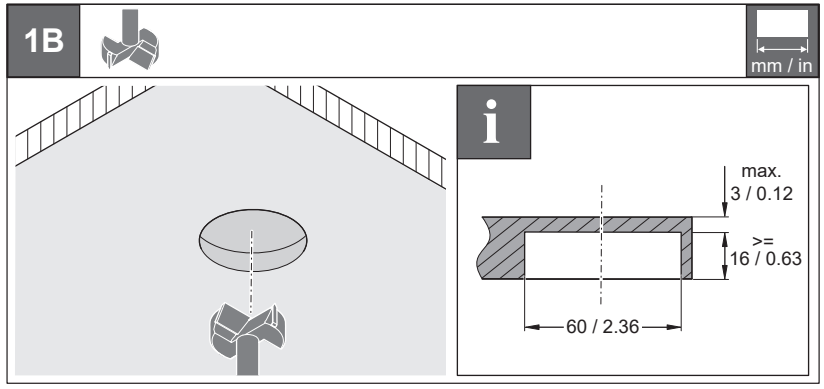

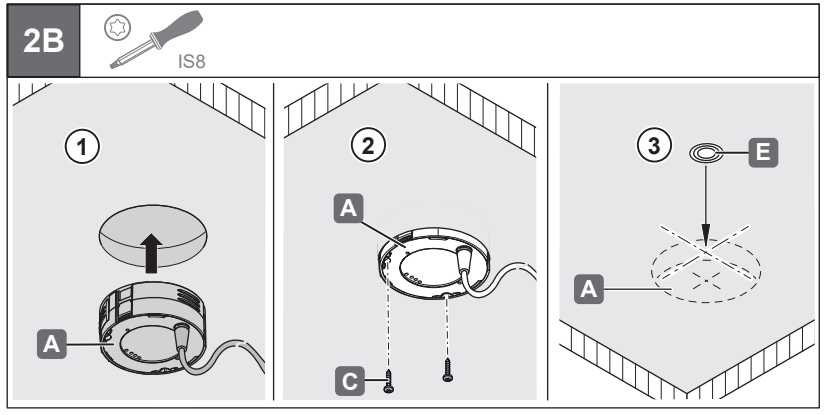

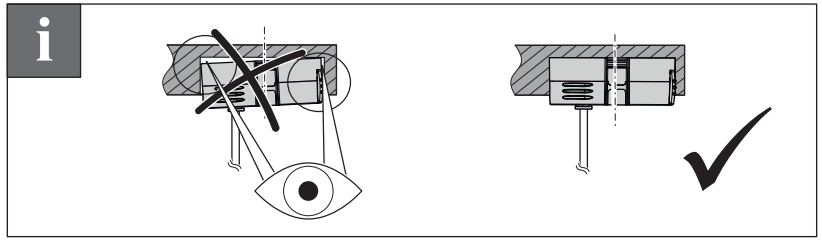

732.28.321

HDE 06.03.2024

HÄFELE

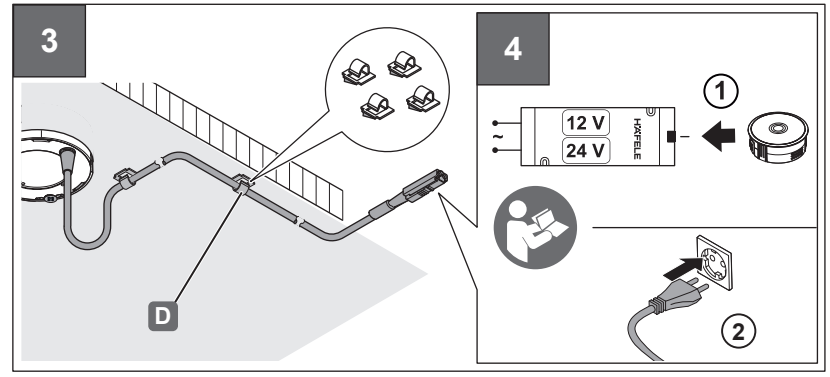

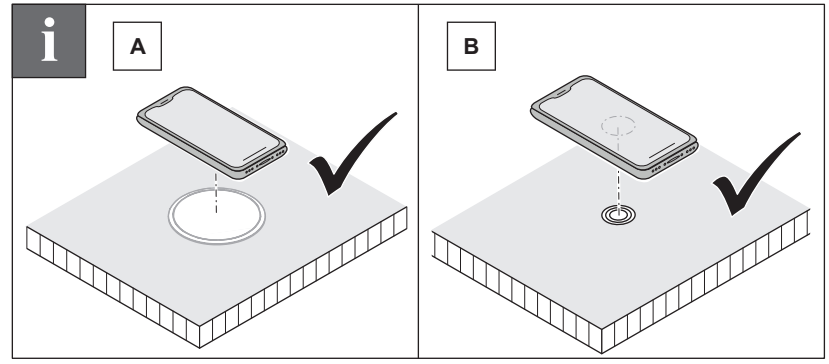

BPP: 127 KHz **MPP:** 360 KHz

FCC Warning

This device complies with part 15 of the FCC Rules. Operation is subject to the following two conditions:(1) This device may not cause harmful interference, and (2) this device must accept any interference received, including interference that may cause undesired operation.

Any Changes or modifications not expressly approved by the party responsible for compliance could void the user's authority to operate the equipment.

This equipment has been tested and found to comply with the limits for a Class B digital device, pursuant to part 15 of the FCC Rules. These limits are designed to provide reasonable protection against harmful interference in a residential installation. This equipment generates uses and can radiate radio frequency energy and, if not installed and used in accordance with the instructions, may cause harmful interference to radio communications. However, there is no guarantee that interference will not occur in a particular installation. If this equipment does cause harmful interference to radio or television reception, which can be determined by turning the equipment off and on, the user is encouraged to try to correct the interference by one or more of the following measures:

- Reorient or relocate the receiving antenna.
- Increase the separation between the equipment and receiver.
- Connect the equipment into an outlet on a circuit different from that to which the receiver is connected.
- Consult the dealer or an experienced radio/TV technician for help.

FCC RF exposure statement:

The equipment complies with FCC radiation exposure limits set forth for an uncontrolled environment. This equipment should be installed and operated with minimum distance between 20cm the radiator your body.

732.28.321

HDE 06.03.2024

Subject to alteration

© 2024 by Häfele SE & Co KG

Adolf-Häfele-Str. 1 · D-72202 Nagold · www.hafele.com

Size:250x190mm
材质:128克书纸
印刷:黑色(白底黑字);双面印刷。

LOOX5 HÄFELE

Wireless Charger

833.73.822
833.73.823

	V	W	mm/in	T_A	Output Power	Standby Power
833.73.822	24 V	20 W	Ø58 x 23/ Ø2.2x0.9	-10°C – + 40°C +14°F – +104°F	max. 15 W	<0,3 W
833.73.823	12 V					

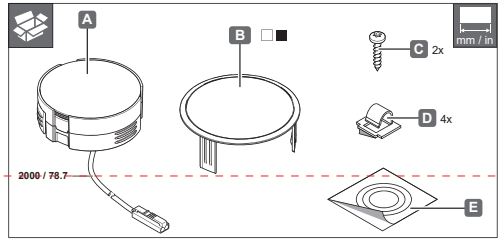

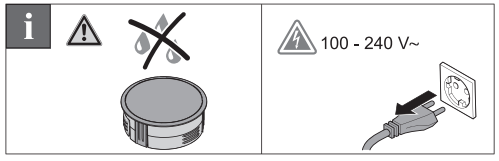

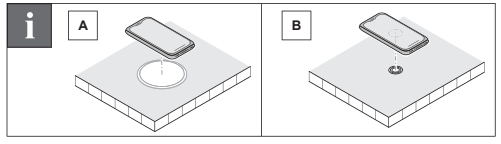

732.28.321

HDE 06.03.2024

IP20

Size:250x190mm

HÄFELE

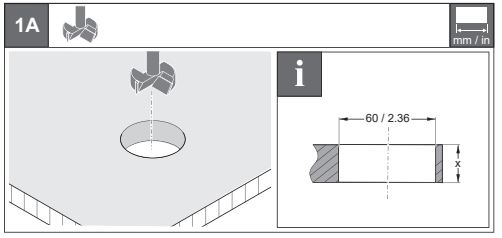

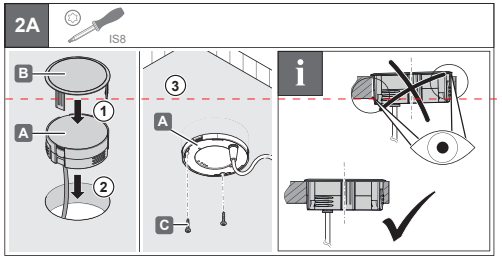

732.28.321

HDE 06.03.2024

LOOX5 HÄFELE

Wireless Charger

833.73.822
833.73.823

	V	W	mm/in	T_A	Output Power	Standby Power
833.73.822	24 V	20 W	Ø58 x 23/ Ø2.2x0.9	-10°C – + 40°C +14°F – +104°F	max. 15 W	<0,3 W
833.73.823	12 V					

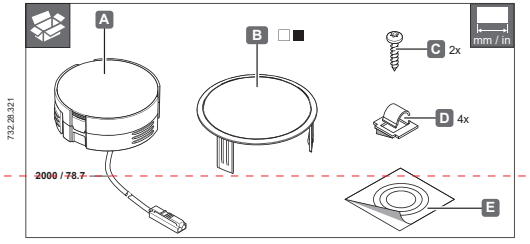

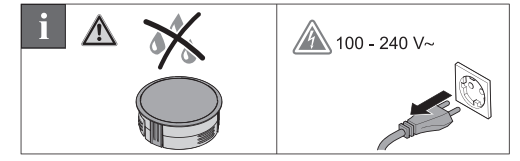

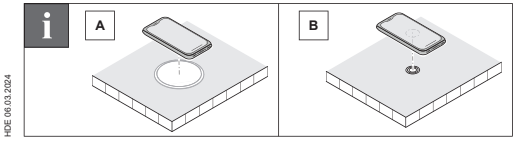

732.28.321

HDE 06.03.2024

IP20

Size:125x190mm

LOOX5 HÄFELE

Wireless Charger

833.73.822
833.73.823

	V	W	mm/in	T_A	Output Power	Standby Power
833.73.822	24 V	20 W	Ø58 x 23/ Ø2.2x0.9	-10°C – + 40°C +14°F – +104°F	max. 15 W	<0,3 W
833.73.823	12 V					

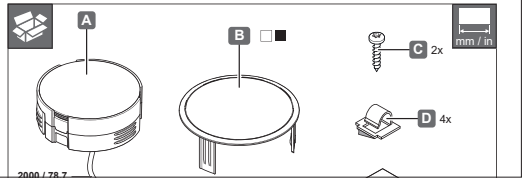

732.28.321

Size:125x95mm