SOM7981 USER MANUAL V1.0

MT7981BA and MT7976C Based System-on-Module

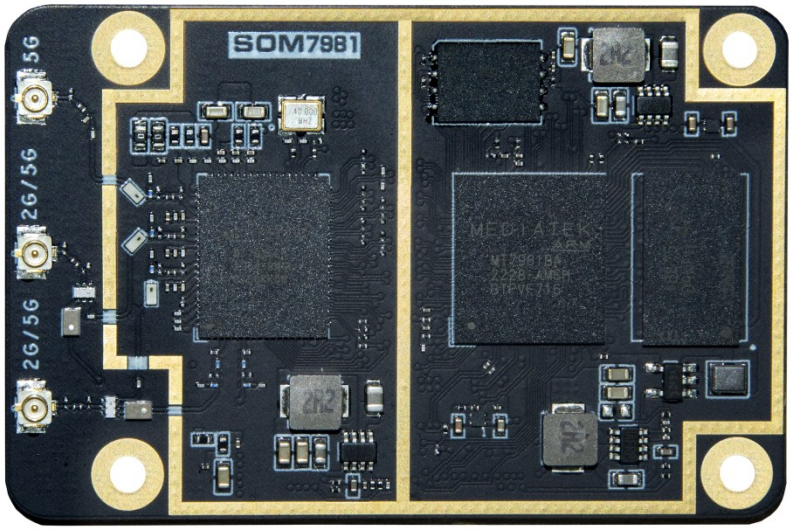

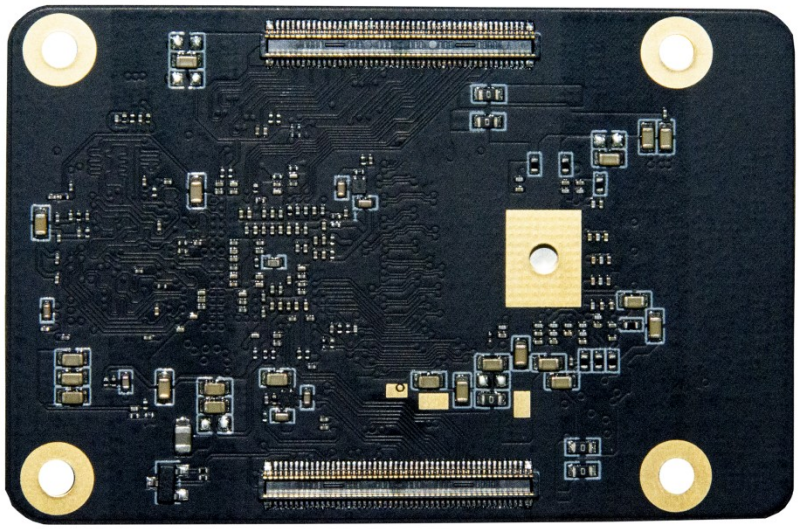

Revision History

Version	Description	Date
Draft	Initial Release	08/04/2024

Contents

1. Introduction

SOM7981 is an advanced System on Module (SoM) equipped with a MediaTek® MT7981BA processor and a powerful Wi-Fi 6 dual-band radio. This compact SOM blends a high-performance CPU with an extended-range radio module, making it perfect for Wi-Fi and IoT applications. It offers a tiny,hackable linux and OpenWrt platform for VPN router,IoT,smart home and more.

Core features of the SOM7981 module include:

- MediaTek® MT7981BA SoC
  - ARM® dual-core Cortex®-A53 CPU running at 1400Hhz
  - HW NAT
  - HW QoS
- 512MB/1GB DDR4 memory
- Up to 256MB SPI NAND flash
- One Gigabit Ethernet (10/100/1000 Mbps)
- One HSGMII interface for 2.5G Ethernet (10/100/1000/2500 Mbps
- On-chip encryption

Hardware Interfaces:

- One HSGMII interface for 2.5G Ethernet (10/100/1000/2500) Mbps
- One Gigabit Ethernet (10/100/1000 Mbps)
- 3x UART
- 3x SPI (50 Mbit/s, including 3 with full duplex I2S audio class accuracy)
- 1x PCM (stereo audio: I2S, PDM, SPDIF Tx)
- 2x SDMMC up to 8-bit (SD / e•MMC™ / SDIO)
- USB 3.0 host
- PCIe Gen2 1-linex1 multiplexed with USB 3.0 interface
- 30+ GPIO multiplexed with our functions

Wi-Fi features:

- IEEE 802.11 Wi-Fi 6 (a/b/g/n/ac/ax)
- Wi-Fi Frequency 2.4GHz, 5GHz
- Antenna 2T3R
- Data Throughput 3Gbps

2. Hardware

The module is built around MT7981BA and MT7976C.

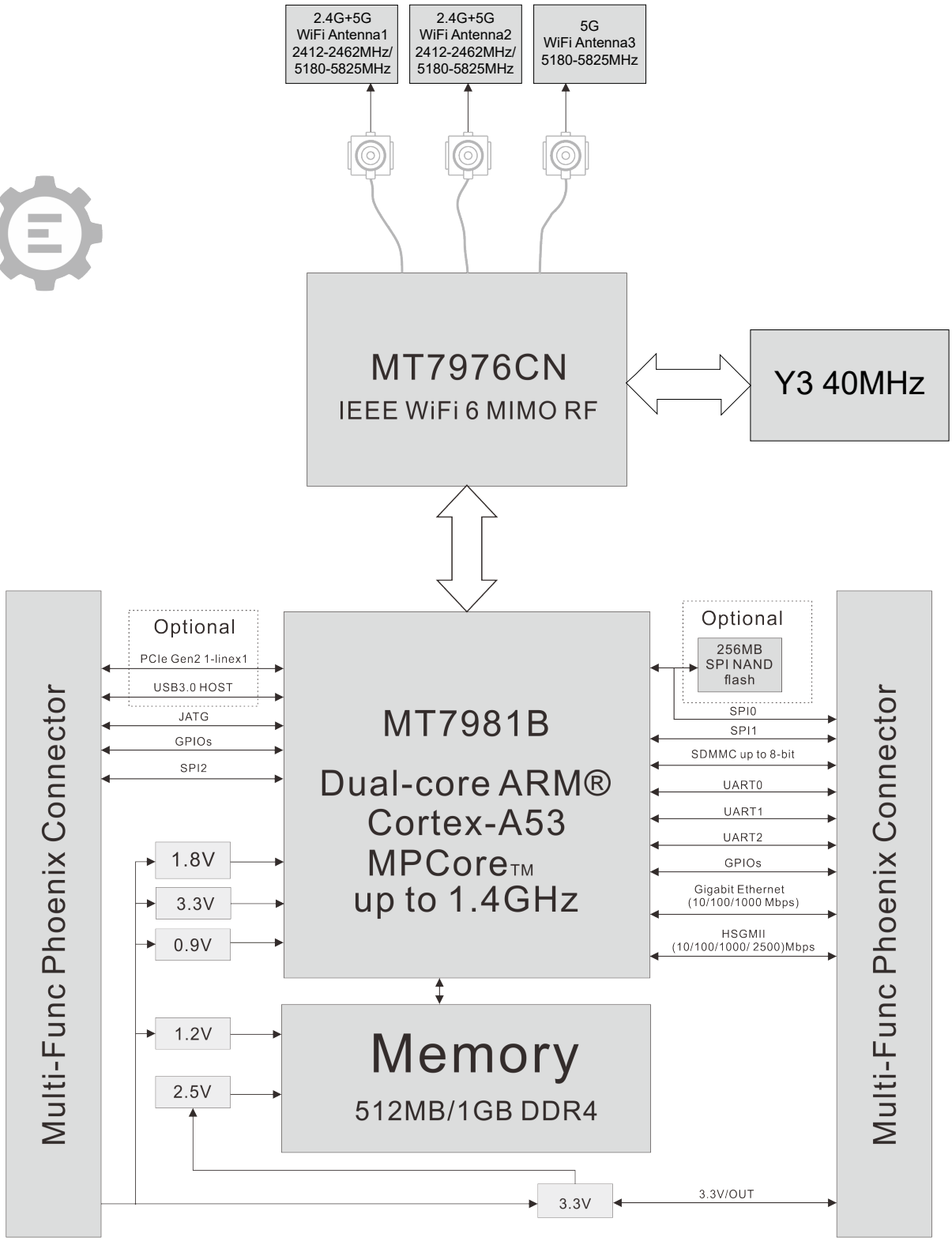

3. Interface

The following sections list the interfaces available on the SoM7981 and details the module pins used to interact with and control each interface. See the MT7981BA Data Sheet and Reference Manual for complete functional descriptions, programming guidelines and register listings for each of these blocks.

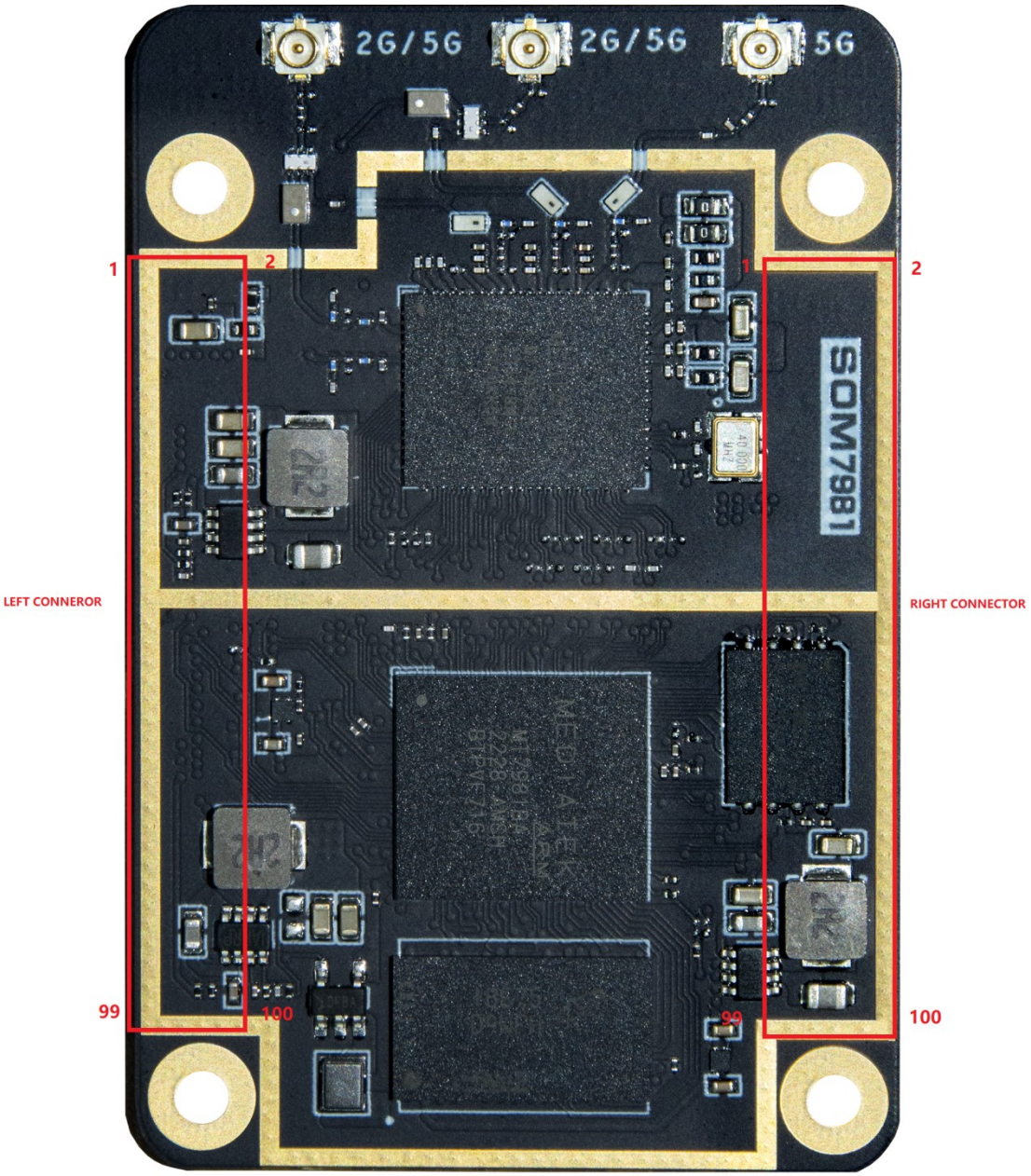

3.1 PINOUT of LEFT CONNECTOR(top view)

	PIN NO.			Func.0	Func.1	Func.2	Func.3	Func.4
GND	1	2	GND					
GND	3	4						
1.8V_OUT	5	6						
1.8V_OUT	7	8						
1.8V_OUT	9	10						
1.8V_OUT	11	12						
1.8V_OUT	13	14						
1.8V_OUT	15	16						
GND	17	18	SYS_RST#					
GND	19	20	GND					
GND	21	22	PCIE_RST#	GPIO3	PCIE_RST#			
GND	23	24	GND					
GND	25	26	PCIE_CLKN					
	27	28	PCIE_CLKP					
	29	30	GND					
	31	32	SSUSB_RXN					
	33	34	SSUSB_RXP					
	35	36	GND					
	37	38	SSUSB_TXN					
	39	40	SSUSB_TXP					
	41	42	GND					
	43	44	USB20_DM					
	45	46	USB20_DP					
	47	48	GND					
	49	50	USB_VBUS	GPIO14	USB_VBUS	PWM1		
	51	52	WF5G_LED	GPIO35	WF5G_LED	PCIE_WAKE#		
	53	54	WF2G_LED	GPIO34	WF2G_LED	PCIE_CLKREQ		
	55	56	GND					
	57	58	SYS_WDT	GPIO2	SYS_WDT			
	59	60	POR_RST#_1V8					
	61	62	GND					
	63	64	JTAG_JTDO	GPIO4	JTAG_JTDO		UART2_RXD	
	65	66	JTAG_JTDI	GPIO5	JTAG_JTDI		UART2_TXD	
	67	68	JTAG_JTMS	GPIO6	JTAG_JTMS		UART2_CTS	
	69	70	JTAG_JTCK	GPIO7	JTAG_JTCK		UART2_RTS	PWM2

	71	72	JTAG_JTRST#	GPIO8	JTAG_JTRST#		GBE_LED0	
	73	74	GND					
GND	75	76	WO_JTDO	GPIO9	WO_JTDO			PCM_TX
GND	77	78	WO_JTDI	GPIO10	WO_JTDI			PCM_RX
GND	79	80	WO_JTMS	GPIO11	WO_JTMS			PCM_CLK
GND	81	82	WO_JTCK	GPIO12	WO_JTCK			PCM_FS
GND	83	84	WO_JTRST#	GPIO13	WO_JTRST#	PWM0	GBE_LED1	PCM_MCK
GND	85	86	GND					
12V_IN	87	88	SPI2_CS	GPIO29	SPI2_CS	UART1_RTS		
12V_IN	89	90	SPI2_MISO	GPIO28	SPI2_MISO	UART1_CTS		
12V_IN	91	92	SPI2_MOSK	GPIO27	SPI2_MOSK	UART1_TXD		
12V_IN	93	94	SPI2_CLK	GPIO26	SPI2_CLK	UART1_RXD		
12V_IN	95	96	SPI2_WP	GPIO31	SPI2_WP	WF5G_LED		I2C_SDA
12V_IN	97	98	SPI2_HOLD	GPIO30	SPI2_HOLD	WF2G_LED		I2C_SCL
GND	99	100	GND					

Table1: left connector

3.2 PINOUT of RIGHT CONNECTOR(top view)

Func.4	Func.3	Func.2	Func.1	Func.0		PIN NO.		
					GND	1	2	GND
						3	4	
						5	6	
					GND	7	8	
						9	10	
						11	12	GND
					GND	13	14	
				GPIO1	RST#	15	16	
				GPIO0	WPS#	17	18	GND
					GND	19	20	
			UART0_TXD	GPIO33	UART0_TXD	21	22	
			UART0_RXD	GPIO32	UART0_RXD	23	24	GND
					GND	25	26	
		I2C_SDA	SMI_MDIO	GPIO37	SMI_MDIO	27	28	
		I2C_SCL	SMI_MDC	GPIO36	SMI_MDC	29	30	GND
			GBE_INT#	GPIO38	GBE_INT#	31	32	
					GND	33	34	
				GPIO39	GBE_RST#	35	36	GND
	PWM1	EMMC_RST#	PWM0	GPIO15	PWM0	37	38	

					GND	39	40	
	UART2_RTS	EMMC_CLK	SPI1_CS	GPIO25	SPI1_CS	41	42	GND
	UART2_CTS	EMMC_CMD	SPI1_MISO	GPIO24	SPI1_MISO	43	44	
	UART2_TXD	EMMC_DAT7	SPI1_MOSI	GPIO23	SPI1_MOSI	45	46	
	UART2_RXD	EMMC_DAT6	SPI1_CLK	GPIO22	SPI1_CLK	47	48	GND
					GND	49	50	
UART1_RTS		EMMC_DAT3	SPI0_CS	GPIO19	SPI0_CS	51	52	
UART1_CTS		EMMC_DAT2	SPI0_MISO	GPIO18	SPI0_MISO	53	54	GND
UART1_TXD		EMMC_DAT1	SPI0_MOSI	GPIO17	SPI0_MOSI	55	56	
UART1_RXD		EMMC_DAT0	SPI0_CLK	GPIO16	SPI0_CLK	57	58	
		EMMC_DAT5	SPI0_WP	GPIO21	SPI0_WP	59	60	
		EMMC_DAT4	SPI0_HOLD	GPIO20	SPI0_HOLD	61	62	
					GND	63	64	
					HSGMII_RXP	65	66	
					HSGMII_RXN	67	68	
					GND	69	70	
					HSGMII_TXN	71	72	GND
					HSGMII_TXP	73	74	GND
					GND	75	76	GND
					NET1_TRXP3	77	78	GND
					NET1_TRXN3	79	80	GND
					GND	81	82	GND
					NET1_TRXP2	83	84	3.3V_OUT
					NET1_TRXN2	85	86	3.3V_OUT
					GND	87	88	3.3V_OUT
					NET1_TRXP1	89	90	3.3V_OUT
					NET1_TRXN1	91	92	3.3V_OUT
					GND	93	94	3.3V_OUT
					NET1_TRXP0	95	96	3.3V_OUT
					NET1_TRXN0	97	98	3.3V_OUT
					GND	99	100	GND

Table2: Right connector

3.3 Power supply Signals

When developing a carrier board for SOM7981,the power supply signals should be considered first.

- All GND signals should be connected to system ground directly.
- 12V_IN , main power supply of the module.
- USB_VBUS, 5V USB power supply.
- 3.3V_OUT, on board 3.3V DC-DC output .

3.4 System Signals

3.4.1 SYS_RST#

It is a directional, open drain signal, pulled up to the 3.3V_OUT. The signal is used as global module reset. When driven low by the carrier board, it reset the whole module.When module power sequence is complete,it can be used as carrier board supply enable, used to ensure proper power on/off sequencing between module and carrier board power supplies,an 4.7kΩ resistor is used to pull-up to the 3.3V_OUT.

3.4.2 Boot mode and storage

Boot Strapping Pin Name	Description	Boot Sequence
{PWM0, USB_VBUS}	Boot mode	00: SPI-NOR **01: SPI-NAND==>SD** 10: eMMC 11: SNAND(SFNI)==>SD

The SPI-NAND boot is the first boot mode in boot sequence(The SPI-NAND chip has been equipped in the SOM when shipped out). But if the customer need the eMMC as mass storage,you may change the boot mode to eMMC and need to place the eMMC on the carrier PCB board.

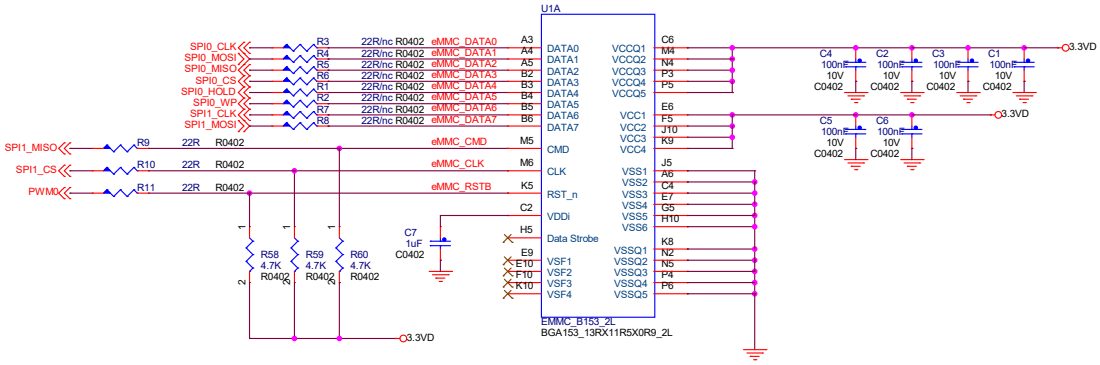

NOTE:

The SPI0 and eMMC can't be used at the same time.

If you want to use the eMMC as system storage,the SPI-NAND pre-solded chip should be removed

3.4.3 EthernetS

The MT7981BA integrates an Ethernet PHY internally with 10/100/1000 BASE-T IEEE 802.3 compliant .

Name	Direction	Type	Description
NET1_TRXP0	Bidirectional	MDI	MDI Data0
NET1_TRXN0			
NET1_TRXP1	Bidirectional	MDI	MDI Data1
NET1_TRXN1			
NET1_TRXP2	Bidirectional	MDI	MDI Data2
NET1_TRXN2			
NET1_TRXP3	Bidirectional	MDI	MDI Data3
NET1_TRXN3			
GBE_LED_ACT	Output		Ethernet Activity LED(yellow)
GBE_LED_LINK	Output		Link LED (green) enable,only lighted in 1000 Mbps mode

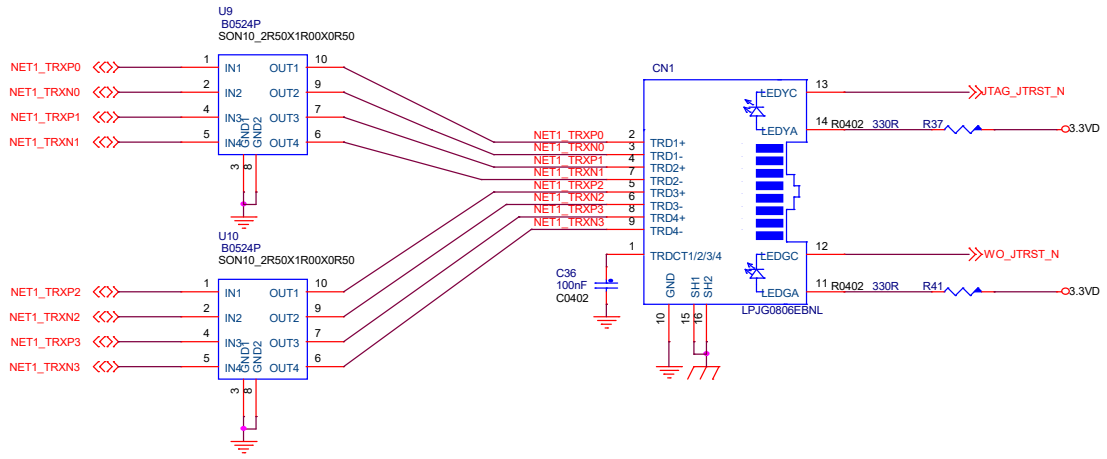

4.Electrical specifications

4.1 Recommended Operation Conditions

Symbol	Comments	Min	Typical	Max	Uint
12V_IN	Main power supply	4.5	12V	16	V
3.3V_OUT	Main 3.3V power out put	3.0	3.3	3.6	V
1.8V_OUT	Main 1.8V power out put	1.6	1.8	2.0	V
I/O pins	Other GPIO with specified	-0.3	3.3	3.6	V

Note:

1. All GPIO pins should be powered after **VDD_3V3_OUT**
2. The total current of **VDD_3V3_OUT** should under 1.0A.

5. Mechanical Drawings(TBD)

6. Application examples (TBD)

OEM integration instructions:

This device is intended only for OEM integrators under the following conditions: The transmitter module may not be co-located with any other transmitter or antenna. The module shall be only used with the external antenna(s) that has been originally tested and certified with this module. As long as the conditions above are met, further transmitter test will not be required. However, the OEM integrator is still responsible for testing their end-product for any additional compliance requirements required with this module installed (for example, digital device emissions, PC peripheral requirements, etc.).
Validity of using the module certification:
In the event that these conditions cannot be met (for example certain laptop configurations or co-location with another transmitter), then the FCC authorization for this module in combination with the host equipment is no longer considered valid and the FCC ID of the module cannot be used on the final product. In these circumstances, the OEM integrator will be responsible for re-evaluating the end product (including the transmitter) and obtaining a separate FCC authorization.
End product labeling:
The final end product must be labeled in a visible area with the following: "Contains Transmitter Module FCC ID: 2BKE9-SOM7981".
Information that must be placed in the end user manual:
The OEM integrator has to be aware not to provide information to the end user regarding how to install or remove this RF module in the user's manual of the end product which integrates this module. The end user manual shall include all required regulatory information/warning as show in this manual.
Integration instructions for host product manufacturers according to KDB 996369 D03 OEM Manual v01
2.2 List of applicable FCCrules
FCC Part 15 Subpart C 15.247 & 15.207 & 15.209 & 15.407
2.3 Specific operational useconditions
The module WiFi Module is a module with WIFI 2.4G / WIFI 5G function.
Operation Frequency:
WIFI 2.4G:2412~2462MHz
WIFI 5G:5150 MHz~5250MHz; 5250MHz~5350MHz; 5470MHz~5725MHz;
5725MHz ~5850MHz
Type:
WIFI 2.4G: External Antenna; Gain: Antenna 1: 4.3dBi; Antenna 2: 4.3dBi
WIFI 5G: External Antenna; Gain:Antenna 1:5.16dBi; Antenna 2:5.16dBi;
Antenna 3:5.16dBi
The module can be used for mobile or applications with the maximum ; The host manufacturer installing this module into their product must ensure that the final composit product complies with the FCC requirements by a technical assessment or evaluation to the FCC rules, including the transmitter operaition. The host manufacturer has to be aware not to provide information to the end user regarding how to install or remove this RF module in the user's manual of the end product which integrates this module. The end user manual shall include all required regulatory information/warning as show in this manual.

2.4 Limited module procedures
Not applicable. The module is a Single module and complies with the requirement of FCC Part 15.212.
2.5 Trace antennadesigns
Not applicable. The module has its own antenna, and doesn't need a host's printed board microstrip trace antenna etc.
2.6 RF exposureconsiderations
The module must be installed in the host equipment such that at least 20cm is maintained betweenthe antenna and users' body; and if RF exposure statement or module layout is changed, then the host product manufacturer required to take responsibility of the module through a change in FCC ID or new application. The FCC ID of the module cannot be used on the final product. In these circumstances, the host manufacturer will be responsible for re-evaluating the end product (including the transmitter) and obtaining a separate FCC authorization.
2.7 Antennas
Antenna Specification are as follows:
Type:
WIFI 2.4G: External Antenna; Gain: Antenna 1: 4.3dBi; Antenna 2: 4.3dBi
WIFI 5G: External Antenna; Gain:Antenna 1:5.16dBi; Antenna 2:5.16dBi;
Antenna 3:5.16dBi
This device is intended only for host manufacturers under the following conditions: The transmitter module may not be co-located with any other transmitter or antenna; The module shall be only used with the internal antenna(s) that has been originally tested and certified with this module. The antenna must be either permanently attached or employ a 'unique' antenna coupler. As long as the conditions above are met, further transmitter test will not be required. However, the host manufacturer is still responsible for testing their end-product for any additional compliance requirements required with this module installed (for example, digital device emissions, PC peripheral requirements, etc.).
2.8 Label and complianceinformation
Host product manufacturers need to provide a physical or e-label stating "Contains FCC ID:2BKE9-SOM7981"with their finished product.
2.9 Information on test modes and additional testingrequirements
Data transfer module demo board can control the EUT work in RF test mode at specified test channel. Additional testing, Part 15 Subpart B disclaimer.
The module without unintentional-radiator digital circuit, so the module does not required an evaluation by FCC Part 15 Subpart B. The host should be evaluated by the FCC Subpart B.
2.10 Additional testing, Part 15 Subpart Bdisclaimer
The modular transmitter is only FCC authorized for FCC Part 15 Subpart C 15.247 & 15.207 & 15.209 & 15.407 and that the host product manufacturer is responsible for compliance to any other FCC rules that apply to the host not covered by the modular transmitter grant of certification. If the grantee markets their product as being Part 15 Subpart B compliant. (when it also contains unintentional-radiator digital circuity), then the grantee shall provide a notice stating that the final host product still requires Part 15 Subpart B compliance testing with the modular transmitter installed.

Antenna information:

Manufacturer:ShenZhen XinErSheng Technology Co.,Ltd
Model:SFANT12E13352

FCC STATEMENT :

This device complies with part 15 of the FCC Rules. Operation is subject to the following two conditions:

(1) this device may not cause harmful interference, and (2) this device must accept any interference receivedincluding interference that may cause undesired operation.Any changes or modifications not expressly approved by the party responsible for compliance could void the user's authority to operate the equipment.

NOTE: This equipment has been tested and found to comply with the limits for a Class B digital device, pursuant Part 15 of the FCC Rules. These limits are designed to provide reasonable protection against harmful interference in a residential installation. This equipment generate, uses and can radiate radio frequency energy and, if not installed and used in accordance with the instructions, may cause harmful interference to radio communications. However, there is no guarantee that interference will not occur in a particular installation. If this equipment does cause harmfu interference to radio or television reception, which can be determined by turning the equipment off and on, the user is ncouraged to try to correct the interference by one or more of the following measures: -- Reorient or relocate the receiving antenna.

interference by one or more of the following measures:

-- Reorient or relocate the receiving antenna.

-- Increase the separation between the equipment and receiver.

-- Connect the equipment into an outlet on a circuit different from that to which the receiver is connected.

-- Consult the dealer or an experienced radio/TV technician for help.

This equipment complies with FCC radiation exposure limits set forth for an uncontrolled environment.

This equipment should be installed and operated with minimum distance 20cm between the radiator & your body.

Changes or modifications not expressly approved by the party responsible for compliance could void the user's authority to operate the equipment.

Operations in the 5.15-5.35GHz band are restricted to indoor usage only.