尺寸：165mm*（65*4）mm　三折4页 105g铜版纸

Overview

Congratulations on your purchase of the TOPOS wireless temperature probe, a digital food thermometer with temperature display. You will now be able to remotely monitor the temperature of grilling food and the temperature inside your grill from anywhere in your home. If you have any question or need support, please feel free to contact us at：jane@toposen.com

Before Using

1.Please read the instruction manual carefully. This information will help you to familiarize yourself with your new device, to find out important details about its first use and how to operate it and to get help in the event of malfunction.

2. Following and respecting the instructions in the manual will prevent damage to your device and loss of your statutory rights arising from defects due to incorrect use.

3.We shall not be liable for any damage due to non-following of these instructions or misuse of the device.

4. Please take note of the safety advice.

5. Please keep this instruction manual for future reference

Part List

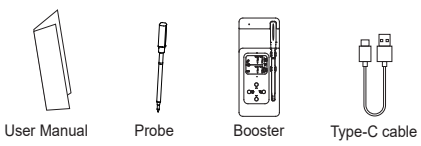

Key Manual

① Setting：Set temperature alarm task, long press 10 seconds to reset.
② Temp+：Turning up temperature +1.
long press for fast turning up.
③ Temp-：Turning down temperature -1.
long press for fast turning down.
④℃/℉ Switching：Click to toggle the temperature units.

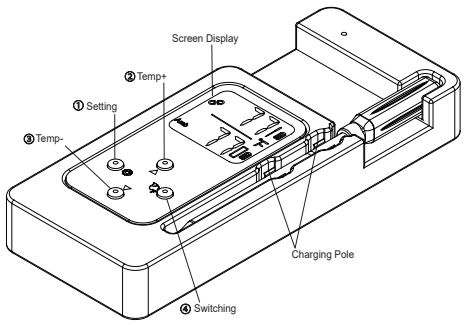

Ceramic Safety line：Industry first, excellent thermal insulation and eye-catching white logo. Reduce the influence of high temperature heat transfer in the furnace to the tip of the probe (to detect the temperature of the meat), accurately control the temperature and ensure the taste of the meat.

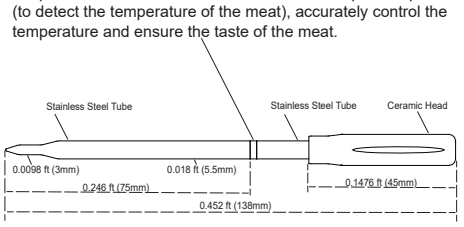

Usage

Follow the steps below to set up your TPSC001.

Step 1. Download and install the AIBBQ APP Scan the QR Code follow or search AIBBQ in Apple Store for iOS or Google Play for Android. Download the App and install it on your smart device.

iOS
App Store Search AIBBQ

Android
Google Play Search AIBBQ

Step 2. Enable Bluetooth on your smart device,**and remove the probe from the booster,check that the temperature value is displayed on the booster screen**.after showing, search for nearby devices to connect.
Products require application permissions to be added to the app. Don't worry, we don't collect any of your privacy, but Google systems requires that you have this permission to scan your device products.App is a stand-alone version, no network can also be used, the app will not upload any of your privacy, please agree to all permissions, rest assured to use.

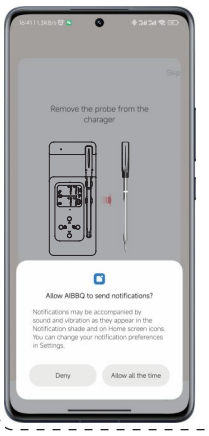

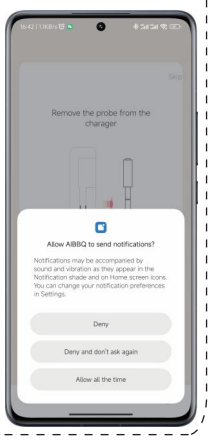

Step 3. Agree to located permissions.Note: you must agree to it, if you use the Android system.

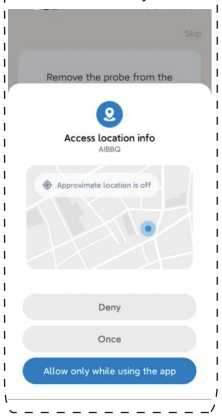

Step 4. Open the App and click “Add Device”.

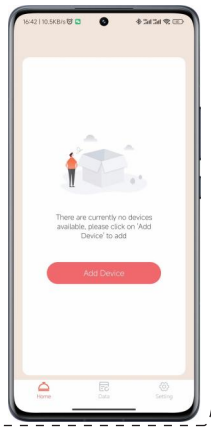

Step 5. Allow AIBBQ to discover and connect to the devices nearby.

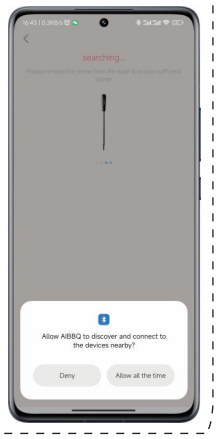

Step 6. Find the device (e.g., meat probe) to pair . Before connecting the device, check that the temperature value is displayed on the booster screen.

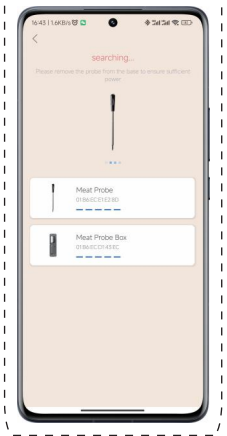

Step 7. After pairing the probe, click “Choose Food” Choose the food to prepare

And then. Choose the food to cook.You don't need to pair them again for future uses.

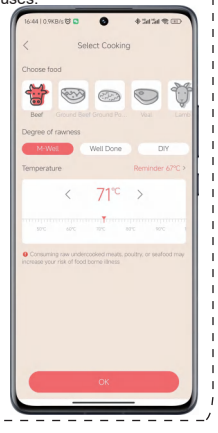

After Use

①The probe should be cleaned before and after each use.

②After the probe is cleaned, it needs to dry the water stains before it can be put back into the booster.

③The thermometer should be stored in a dry, cool and vaporless location to maintain its performance.

④If you have any problems during the use of the product, you can try to reset the product by long press the Setting key for more than 10s. If there is still any problem after the reset, contact the seller.

FCC Requirement

Any changes or modifications not expressly approved by the party responsible for compliance could void the user’s authority to operate the equipment.
This device complies with Part 15 of the FCC Rules. Operation is subject to the following two conditions:
(1) this device may not cause harmful interference, and
(2) this device must accept any interference received, including interference that may cause undesired operation.
This transmitter must not be co-located or operating in conjunction with any other antenna or transmitter.

Note: This equipment has been tested and found to comply with the limits for a Class B digital device, pursuant to Part 15 of the FCC Rules. These limits are designed to provide reasonable protection against harmful interference in a residential installation. This equipment generates, uses, and can radiate radio frequency energy, and if not installed and used in accordance with the instructions, may cause harmful interference to radio communications. However, there is no guarantee that interference will not occur in a particular installation. If this equipment does cause harmful interference to radio or television reception, which can be determined by turning the equipment off and on, the user is encouraged to try to correct the interference by one or more of the following measures:
– Reorient or relocate the receiving antenna.
– Increase the separation between the equipment and receiver.
– Connect the equipment into an outlet on a circuit different from that to which the receiver is connected.
– Consult the dealer or an experienced radio/TV technician for help.
The device has been evaluated to meet general RF exposure requirement. The device can be used in portable exposure condition without restriction.

Made in China

Start cooking

- Insert the probe into the meat deeply enough so that the safety line on the probe is fully covered by the meat.

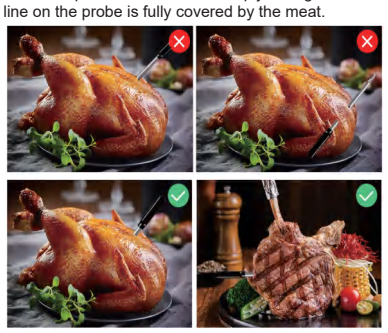

- Set your desired meat temperature or select the meat type and doneness you desire within the AIBBQ App.
- Once the current temperature reaches your target temperature, an alarm will sound from the App.

Attention!

1. In order to keep Bluetooth connection and not get disconnection, we recommend that the distance between the booster and the probe stay within 16.4ft(5 meters), the closer the booster is from the probe,the better,The booster should be placed 2.62ft(80cm) above the floor or at the same height as the oven, and the distance between the phone and the booster is preferably within 98.4ft(30 meters).
Based on our rigorous testing and comparison, in open areas, it can support a maximum distance of 197ft(60 meters) between the probe and the booster, and the maximum distance between the booster and the phone is 164ft to 295ft(50 to 90 meters).

2. After connecting the app, insert the probe into the centre or thickest part of the food, avoiding the bone,all the way to the safety line position.

3. Do not place the booster in cooking equipment or hot areas.

4. Do not put the probe in the microwave, it will destroy the magnetic properties of the probe, causing it to be damaged.

5. If you have any problems during the use of the product, you can try to reset the product by long press the Setting key for more than 10s. If there is still any problem after the reset, contact the seller.

Display function

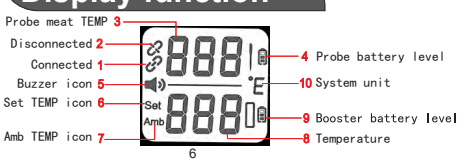

①、Icon of successful connection between mobile APP and booster:OFF when disconnected, ON when connected.
②、Mobile APP and booster disconnect icon: OFF when connected, ON when disconnected.
③、Probe meat temperature display area, "----" is displayed when the probe is disconnected.
④、Probe battery power display, : blinking under low battery with a beep every 30 seconds(the probe needs to be charged in time). When the probe is charging in the booster, the icon shows 0, 1, 2 and 3 cells sequentially.
⑤、Buzzer icon: when the device is ON and there is a temperature alarm task(after setting the temperature) the icon is always on, when the target temperature is reached the buzzer alarms and the icon blinks.
⑥、Preset TEMP icon: Setting icon, press the setup key to enter the set temperature alarm mode, press +,- key to set the food temperature (⑧ regional display), the upper limit of 100 °C, press the setup key again to complete the setup (15 seconds of no operation is automatically confirmed).
⑦ 、Amb TEMP icon : Ambient temperature icon, it will light up (SET icon will go out) when the Ambient temperature is displayed in ⑧ area.
⑧、Setting temperature and Ambient temperature display area: SET lights up when the target temperature is displayed, Amb goes out; SET goes out when the ambient temperature is displayed, Amb lights up.
⑨、Booster battery power icon: display the base battery real-time power, charging icon from 0, 1, 2, 3 grid sequential display, When charging, the icon shows from 0, 1, 2, 3 frames sequentially, when low battery,LO is displayed on ⑧ area,the the outer frame blinks and beeps every 30 seconds which needs to be charged in time.
⑩、Display temperature unit icon; °C/°F key control switch display,default display °F.

Function

①Temperature Alarm Setting: Press setup key to enter the alarm temperature setting, press "+","-" key to set the temperature (the upper limit of temperature is 212°F), press setup key again to complete the setting (no operation for 15 seconds to confirm automatically), when the meat temperature reaches the target temperature, it will trigger the temperature alarm, press any key to cancel the alarm when it is alarmed. Put the probe into the booster, you can cancel the alarm task manually.
②Protective alarm: when the oven temperature reaches 572°F or meat temperature reaches 212°F it will trigger the protective alarm, at this time, you can press any key to cancel the alarm, or the alarm will be canceled automatically when the temperature returns to normal.
③Automatic shutdown: after no operation for 30 seconds,the screen will go out automatically, press any key,the screen will light up for 30 seconds.
④The large screen with physical buttons allows you to quickly set the desired warning temperature away from the app.
⑤If you do not use the app, the procedure for setting the alarm temperature by the physical button is the same as that of the app.
⑥booster low battery indicator. LO is displayed on the low battery screen, and the product cannot be used, and needs to be charged for 2h before use

TOPOS

TPSC001

Wireless Temperature Probe

User Manual

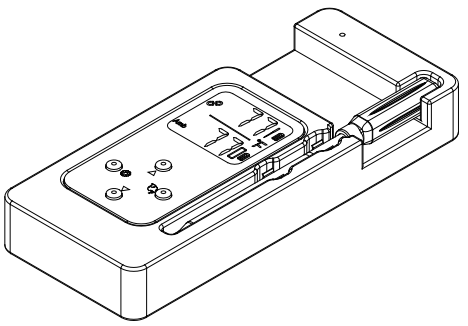

Product Specification

Temperature Range：	
Internal Temperature	-4~212°F（-20~100°C）
Ambient Temperature	32~572°F（0~300°C）
Transmission Range (probe and booster)	197 ft（60m）Outdoor space
Transmission Range (booster and app)	164~295 ft（50~90m）Outdoor space
Measurement accuracy：	
32~212°F（0~100°C）	±1.8°F（±1°C）
212~392°F（100~200°C）	±3.6°F（±2°C）
392~572°F（200~300°C）	±5.4°F（±3°C）
Battery Life：	
Probe	up to 24h
Battery life on full charge (Booster)	120~240h
Fully charged standby (Booster)	About 160 days
Dimension：	
LCD display	1.4 * 1.24 in
Booster	0.98 in * 6.69 in * 2.75 in