Solar Crank Radio Receiver

AM/FM/SW/WB/VHF Receiver w/ Bluetooth/MP3 Player

User's Manual

Schematic Diagram

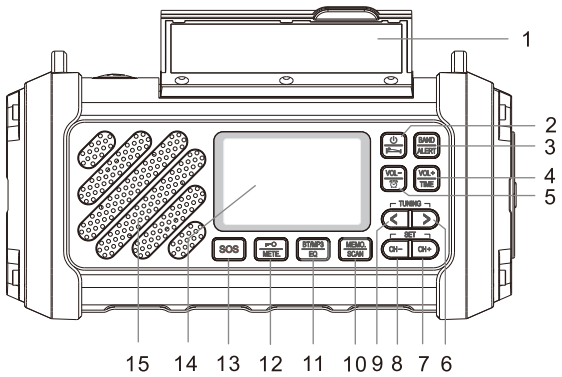

1. 8-LED Reading Lamp
2. Power/Mute/Pause/Sleep Timer Setting Button
3. Band Select/NOAA Weather Alert Button
4. Volume+/Clock Setting Button
5. Volume-/Alarm Setting Button
6. Tuning Adjust/Bandwidth Select/Time Adjustment Button
7. Stored Memories+/Frequency Reception Setting Button
8. Stored Memories-/Bandwidth Setting Button
9. Tuning Adjust/Bandwidth Select/Time Adjustment Button
10. Memories (Manual Storage)/Scan and Preset (Automatic Storage)/WB (Weather Band) Setting Button
11. Bluetooth/MP3/EQ (Equalizer) Button
12. Key Lock/Metter Band Button
13. SOS Mode Button
14. Screen
15. Speaker

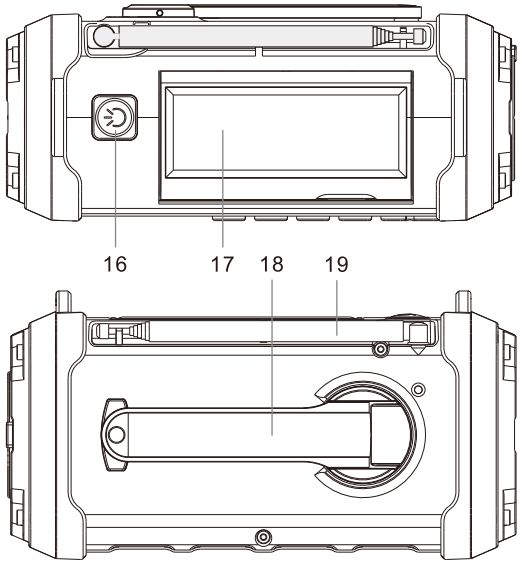

16. Torch Button
17. Solar Panel
18. Dynamo Crank Handle
19. Telescopic Antenna

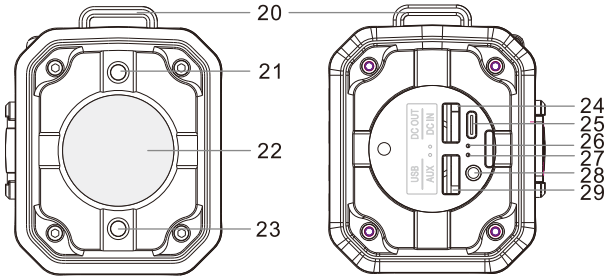

20. Strap Fastener
21. Red Bulb
22. Torch Lighting
23. Blue Bulb
24. DC Output Port
25. USB-C Input Charge Port
26. DC Output Indicator
27. Charging Indicator
28. AUX Input Jack
29. USB Input Port for USB Stick

Screen Display

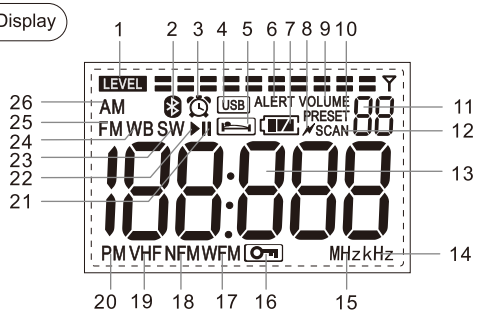

1. Signal Level Icon
2. Bluetooth Icon
3. Alarm Icon
4. USB Stick Icon
5. Sleep Timer Icon
6. NOAA Weather Alert Display
7. Battery Capacity Icon
8. Charging Icon
9. Volume Display
10. Preset (Automatic Storage) Display
11. Volume Level/Memories No./EQ (Equalizer) Display
12. Scan Display
13. Frequency/Time Display
14. kHz Display
15. MHz Display
16. Key Lock Icon
17. VHF (Very High Frequency)-WFM Display
18. VHF (Very High Frequency)-NFM Display
19. VHF (Very High Frequency) Display
20. p.m. Display
21. Mute/ Pause Icon
22. Play Icon
23. SW (Shortwave Band) Display
24. WB (Weather Band) Display
25. FM Band Display
26. AM (MW Band)/a.m. Display

Charging the Built-in Rechargeable Battery

1. USB-C Cable

- Use the attached USB-C cable to connect the power supply to the USB-C Input Charge Port 25 on the right side of the radio to charge it.
- When charging successfully, the blue Charging Indicator 27 blinks, and the Battery Capacity Icon blinks in steps.
- When the battery is fully charged, the Charging Indicator 27 keeps it lit, but the Battery Capacity Icon will not blink.
- Unplug the USB-C cable at this time, the Charging Indicator 27 will be off, and green DC Output Indicator 26 will lit for 30 seconds.

2. Crank Dynamo Power

- Pull out the Dynamo Crank Handle 18 from its recessed holder at the rear of the radio.
- Turn the Dynamo Crank Handle 18 in the clockwise or reverse direction at a steady speed to generate power, to charge the built-in rechargeable battery. The Charging Icon is displayed when the Screen 14 is lit.

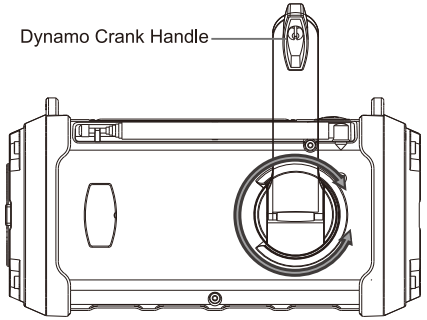

3. Solar Power Panel

- The Solar Panel 17 on the top of the radio can be adjusted at different angles. It converts the energy contained in sunlight into electrical energy by photoelectric conversion and charges the radio's built-in rechargeable battery in case of an emergency.
- Put the radio in strong direct sunlight, the Solar Panel 17 will charge the built-in rechargeable battery and the Charging Icon will display on Screen 14.

Note: When the Screen 14 is off and using the USB-C cable to charge the built-in lithium battery, the Screen 14 lights up and the Charging Icon appears. When charging the built-in lithium battery using Solar Panel 17 or a Dynamo Crank Handle 18, the Screen 14 will not light up to save power.

Battery Capacity Icon Description

- C means battery capacity, when the battery level is low, you will hear "low battery please charge".
- 3 cells of battery power: C > 75%
- 2 cells of battery power: 50% < C < 75%
- 1 cell of battery power: 25% < C < 50%
- 0 cells of battery power: 3% < C < 25%
  C < 3% blink

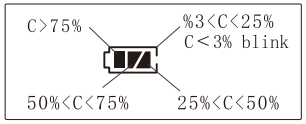

DC Output for USB Devices Charging

The radio has a built-in rechargeable battery with a 10,000mAh capacity, which can be used to charge other USB devices.

- Connect your cellphone or other devices with the DC Output Port 24 on the right of the radio via a charging cable.
- Observe that the green DC Output Indicator 26 is lit, indicating that emergency charging is in progress. Before this, make sure your cellphone or other devices are using DC 5V charging voltage.

Torch Lighting

- Press Torch Button 16, SOS Mode Button 13, or Power Button 2 to wake up the Screen 14.
- Repeatedly press button 16 and the ultra-spotlight Torch Lighting 22 changes as follows:
  Low Beam – High Beam - SOS Flashing – Lights Off

8-LED Reading Lamp

- Adjust the Solar Panel 17 to any angle and the 8-LED Reading Lamp 1 turns on automatically.
- Close the Solar Panel 17 and the 8-LED Reading Lamp 1 goes out automatically.

SOS Mode

- Press SOS Mode Button 13, Torch Button 16, or Power Button 2 to wake up the Screen 14. You can also long-press the SOS Mode Button 13 to proceed to the next step.
- Long press SOS Mode Button 13, Blue Bulb 23, and Red Bulb 21 Start SOS flashing. Press SOS Mode Button 13 to cancel Flash.
- After Blue Bulb 23 and Red Bulb 21 SOS flashing, long press SOS Mode Button 13 for 2 seconds to switch on the SOS alarm and torch flashing. Press SOS Mode Button 13 to turn off all lights and alarms.

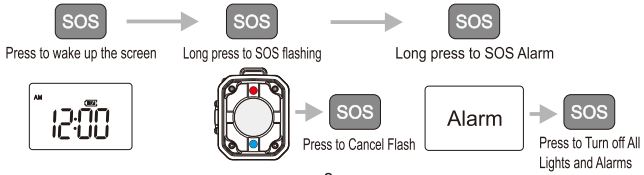

Operation the Radio

Listen to Radio Station

a.Press Power Button 2, SOS Mode Button 13, or Torch Button 16 to wake up the Screen 14. Press Power Button 2 again, **and the radio starts to receive radio waves and you can listen to radio stations, or start to enter Bluetooth/MP3 mode, which means entering the play mode.**

b.In play mode, press Mute/Pause Button 2, and the radio will mute/pause. Press Mute/Pause Button 2 again to continue playing.

c.**To exit play mode, long press Power Button 2 for 2 seconds, which will enter the clock mode.** If no further operations are performed, the Screen 14 will go out after 10 seconds.

Note: In the clock mode, long press the Sleep Timer Setting Button 2 for 2 seconds to set the sleep timer time, for details, refer to the description of "Sleep Timer Setting".

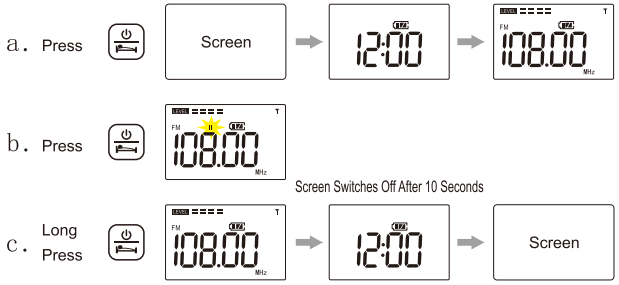

Sleep Timer Setting (In Clock Mode)

- Long press Sleep Timer Setting Button 2, The Sleep Timer Icon will display and blink on the Screen 14.
- Repeatedly press Sleep Timer Setting Button 2 to select the length of time you want the sleep timer to be:
  90 – 80 – 70 – 60 – 50 – 40 – 30 – 20 – 10 – Radio On
- Wait a few seconds to save settings. When the radio plays for the set length of time, the radio will automatically switch off, if you want to switch off earlier, long press Power Button 2.

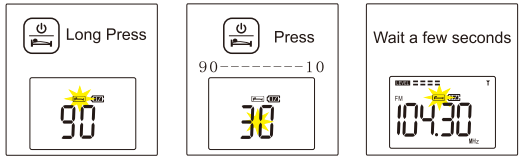

Band Select (In Play Mode)

In play mode, press Band Select Button 3 to select FM/AM/SW (Shortwave)/VHF (NFM/WFM)/WB (Weather Band).

Adjust the Sound Volume (In Play Mode)

In play mode, press Volume+ Button 4 or Volume- Button 5 to change the volume level. There are 32 levels of volume.

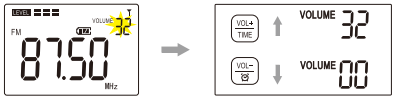

Scan and Preset (Automatic Storage) Radio Stations (In Play Mode)

- After selecting your favorite band in the play mode, long press Scan and Preset (Automatic Storage) Button 10 for 2 seconds to scan the range of frequencies, and automatically store the stations found in memory.
- When the automatic storage is finished, press Stored Memories+ Button 7 or Stored Memories- Button 8 to select the radio station in Memory No. (P01-99).

Note: Each band can store maximum 99 stations in the memory.

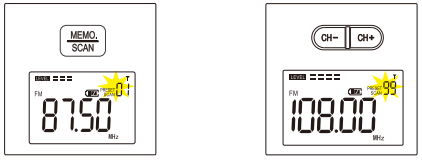

Tuning to a Radio Station (In Play Mode)

- After selecting your favorite band in the play mode, press Tuning Adjust Button 6 or Tuning Adjust button 9 to adjust the frequency reception.
- Long press Tuning Adjust Button 6 or Tuning Adjust button 9, the frequency adjusts fast and stops adjusting when a radio station is searched.

Manual Storage Radio Stations (In Play Mode)

- When you tuning to a radio station, press Memories (Manual Storage) Button 10, the "PRESET" and Memories No. (P01-99) will display and blink.
- Press Stored Memories+ Button 7 or Stored Memories- Button 8 to select the Memories No. you prefer.
- Press Memories (Manual Storage) Button 10 to save the settings.

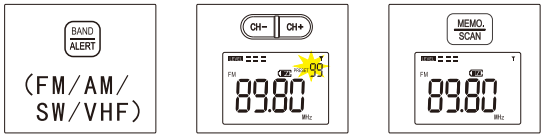

SW (Shortwave) Meter Band Operation (In Play Mode)

When SW (Shortwave) is selected, press the Meter Band Button 12 repeatedly to fast-reach the frequency you want to receive.

3.95MHz-4.75MHz-5.60MHz-7.35MHz-9.90MHz-12.10MHz-13.87MHz-15.80MHz-17.90MHz-19.10MHz-21.85MHz

VHF (Very High Frequency) Bandwidth Setting (In Clock Mode)

The radio can receive VHF (Very High Frequency)-NFM/WFM dual modulation mode, band step is 25kHz.

- VHF (Very High Frequency)-NFM: The bandwidth of NFM mode is 5kHz.
- VHF (Very High Frequency)-WFM: In this mode, 4 bandwidths 50kHz, 100kHz, 150kHz, or 200 kHz can be chosen. The operation of selecting the bandwidth is as follows:

a.In clock mode, long press Bandwidth Setting Button 8 for 2 seconds to enter bandwidth selection.

b.Press Bandwidth Select Button 6 or Bandwidth Select Button 9 to choose a bandwidth you prefer.

c.Wait for 5 seconds to save the setting.

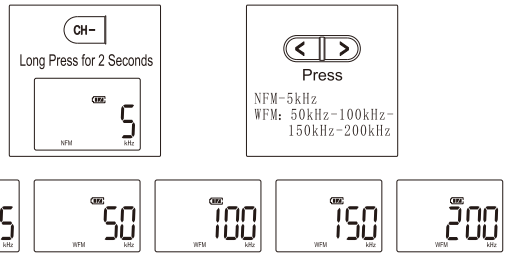

Bluetooth (In Play Mode)

The Bluetooth name of the radio is "HD-2415".

- In play mode, press Bluetooth Button 11 to switch to Bluetooth mode, the Bluetooth Icon and "bt" will display on Screen 14 and blink. Please switch on Bluetooth on your mobile phone to connect to the radio.
- After a successful connection, the Bluetooth Icon and "bt" no longer blink and you will hear "Bluetooth connected". Press Pause Button 2 to pause play or unpause. Press Tuning Adjust Button 6 or Tuning Adjust Button 9 to control next/previous.
- When disconnecting Bluetooth, you will hear "Bluetooth disconnected".

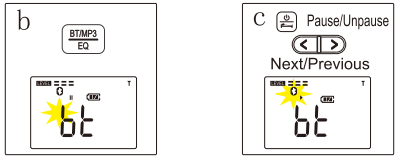

Mp3 Playback (In Play Mode)

- In play mode, insert a USB stick and pres MP3 Button 11 will automatically perform MP3 playback.
- Press Pause Button 2 to pause play or unpause. Press Tuning Adjust Button 6 or Tuning Adjust Button 9 to control next/previous.

AUX-in (In Play Mode)

- In play mode, connect the playback device and this radio by using the AUX cable.
- Press Mp3 Button 11 to playback.

EQ (Equalizer) Setting (In Play Mode)

In play mode, long press EQ (Equalizer) Button 11 to enter setting, then press EQ (Equalizer) Button 11 continuously to select your favorite sound effect. Wait for 3 seconds to save the setting.

E1 – Normal E2 – Pop
E3 – Rock E4 – Jazz
E5 – Classic E6 – Country

WB (Weather Band) Description

WB (Weather Band) can only receive 7 frequencies, which are:

1-162.400MHz 2-162.425MHz
3-162.450MHz 4-162.475MHz
5-162.500MHz 6-162.525MHz
7-162.550MHz

NOAA Weather Alert Function Operation

Enable the NOAA Weather Alert function, when receiving a weather alert from NOAA, the radio will enter the SOS mode, after pressing the SOS Mode Button 13 to exit this mode, the broadcast content will be played automatically. Operation as follows:

- In WB (Weather Band) or clock mode, long press NOAA Weather Alert Button 3 for 2 seconds, then "ALERT" blinks on Screen 14.
- Exit the NOAA Weather Alert function, long press NOAA Weather Alert Button 3 for 2 seconds, then automatically enter the WB (Weather Band).

Note: Enable the NOAA Weather Alert function, pressing any button does not work Except the NOAA Weather Alert Button 3.

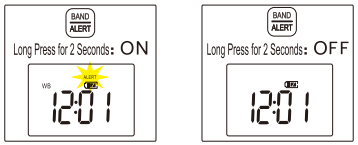

Frequency Range

Type	FM Frequency Range	VHF Frequency Range	AM Frequency Range	SW Frequency Range	WB Frequency Range
1	87.5-108MHz	30.00-199.975MHz	522-1710kHz/9kHz	3.20-21.95MHz	162.400-162.550MHz
2	87-108MHz	30.00-199.975MHz	520-1710kHz/10kHz	3.20-21.95MHz	162.400-162.550MHz
3	76-108MHz	30.00-199.975MHz	522-1710kHz/9kHz	3.20-21.95MHz	162.400-162.550MHz
4	64-108MHz	30.00-199.975MHz	522-1710kHz/9kHz	3.20-21.95MHz	162.400-162.550MHz

Frequency Reception Setting (In Clock Mode)

There are 4 types of frequency ranges above, and this radio can be set by you to the frequency range you want to receive.

Type I – Europe and China Type II - North and South America
Type III – Japan Type IV – Russia

The setting operations are as follows:

a.Long press Frequency Reception Setting Button 7, one of "87.5", "87", "76", "64" will display and blink on the Screen 14.

b.Press Tuning Adjust Button 6 or Tuning Adjust Button 9 to choose one.

c.Press Frequency Reception Setting Button 7 to save the settings.

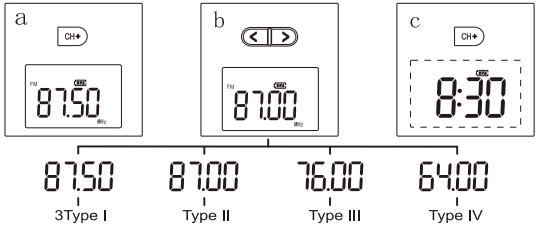

Note: During the frequency reception setting, the screen only displays the low end of the FM frequency. Find out which type of frequency range you have selected by looking at the frequency ranges above. For example, when you save the FM 87 MHz setting, which means you have selected type 2, the AM frequency range will change and the step is 10 KHz.

WB (Weather Band) Setting (In Clock Mode)

a.Long press WB (Weather Band) Setting Button 10, "OFF" or "EN" will display and blink on Screen 14.

b.Press Tuning Adjust Button 6 or Tuning Adjust Button 9 to choose one.

c.Press WB (Weather Band) Setting Button 10 again or wait for 5 seconds to save the setting.

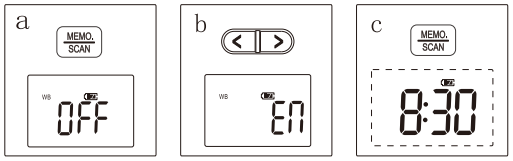

Key Lock Function

a.Long press Key Lock Button 12, and the keys are locked, but you can check the clock when pressing the Power Button 2, Torch Button 16, and SOS Mode Button 13.

b.Long press Key Lock Button 12 to cancel the key lock, pressing all other buttons will have no effect.

Restore Factory Setting (In Clock Mode)

In clock mode, press in turn: CH+ — CH- — CH+, "rESEt" appears and blinks on Screen 14. Then press Power Button 2 to restore the factory setting.

Blinking for 3 seconds, press the button during this time.

Clock Setting (In Clock Mode)

a.Long press Clock Setting Button 4 for 2 seconds, then the hours blinks on the Screen 14. Press Time Adjustment Button 6 or Time Adjustment Button 9 to adjust the hours.

b.Press Clock Setting Button 4, then the minutes blink on the Screen 14. Press Time Adjustment Button 6 or Time Adjustment Button 9 to adjust the minutes.

c.Press Clock Setting Button 4, then “24Hr” or “12Hr” blink on the Screen 14. Press Time Adjustment Button 6 or Time Adjustment Button 9 to select the timing method you prefer.

d.Press Clock Setting Button 4 to save the setting.

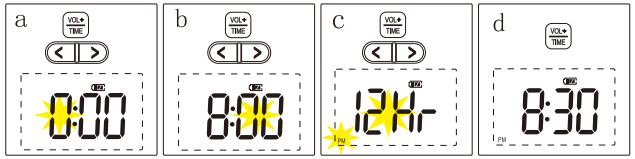

Note: The above settings need to be completed when blinking, each blinking time is 5 seconds, and the blinking stop will exit the current operation.

Alarm Setting (In Clock Mode)

a.Long press Alarm Setting Button 5 for 2 seconds, then the hours blinks on Screen 14. Press Time Adjustment Button 6 or Time Adjustment Button 9 to adjust the hours.

b.Press Alarm Setting Button 5, and the minutes blink on the Screen 14. Press Time Adjustment Button 6 or Time Adjustment Button 9 to adjust the minutes.

c.Press Alarm Setting Button 5, then “PON” or “bU2” blink on the Screen 14. Press Time Adjustment Button 6 or Time Adjustment Button 9 to choose “bU2”. If "bU2" is selected, there are "N1" and "N2" bells to choose from, again using Time Adjustment Button 6 or Time Adjustment Button 9 to select one of the bells. Press Alarm Setting Button 5 or wait a few seconds to save the settings.

d.Press Alarm Setting Button 5 to switch the alarm on or off.

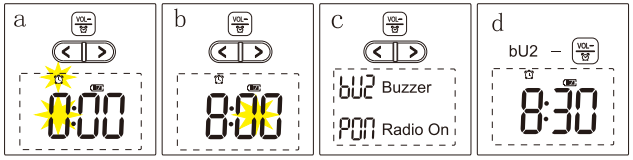

Select "bU2": When the set alarm time is reached, the Alarm ( ) Icon blinks and the buzzer alarm 5 minutes later, the alarm stops.Press the Alarm Setting Button 5 to switch off the bell.

Snooze: When the buzzer alarm, press any button to snooze. The snooze time is 9 minutes and can be repeated or the snooze function can be exited earlier by pressing Alarm Button 5.

Select “PON”: When the set alarm time is reached, The radio switches on and plays the mode before switching off (if Bluetooth mode was used before switching off, you need to click play on the Bluetooth device). The setting procedure starts from step c of the alarm setting:

c. Press Alarm Setting Button 5, then “PON” or “bU2” blink on the Screen 14. Press Time Adjustment Button 6or Time Adjustment Button 9 to choose “PON”.

d. Press Alarm Setting Button 5 to the next step, then press Time Adjustment Button 6 or Time Adjustment Button 9 to choose a switch-off time.

e.Press Alarm Setting Button 5 to save the setting.

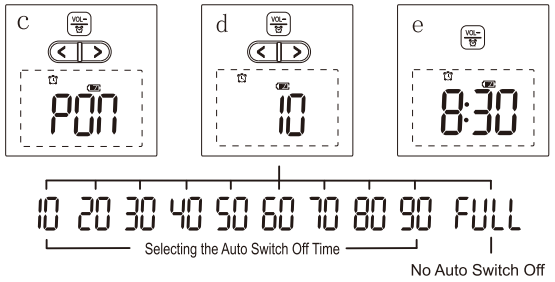

Use of Antenna

- When listening to the FM/SW/VHF/WB stations, extend the Telescopic Antenna 19 to its longest length for optimal reception.
- An external antenna can also be used to enhance reception as described above.
- When listening to AM stations, the radio uses its internal iron oxide bar antenna to receive the AM signal. To improve the radio’s AM reception, try to change the radio’s location or adjust its orientation.

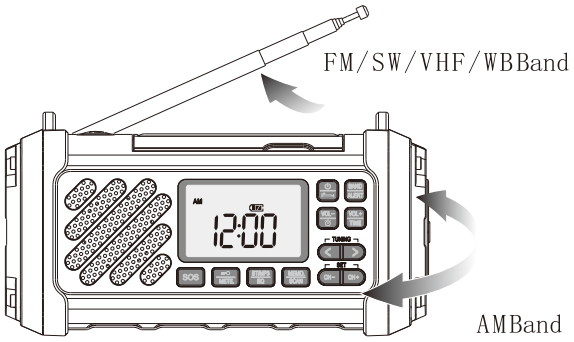

Specifications

Frequency Range	FM:64-108 MHz VHF:30.00-199.975 MHz AM:520-1710 kHz SW:3.20-21.95 MHz WB:162.400-162.550 MHz
Noise Limit Sensitivity	FM:≤15dB VHF:≤15dB AM:≤70dB SW:≤40dB
Number of Memorized Stations	FM=99，VHF=99，AM=99，SW=99
Bluetooth Version	VER 5. 3
Bluetooth Transmission Range	≤15m
MP3 Playback Formats	MP3&WAV&WMA
USB Stick	256G
Max. Power Consumption	≤15W
Power Source	DC 5V/2A
DC Output	OUT PUT DC 5V/2. 4A
Lithium Battery	10000mAh/3.7V
Speaker	Φ40mm/4Ω/5W
AUX Input Jack	3.5mm/plug
Dimensions (Approx)	169. 5x89x72mm
Weight	515g

Warranty

The device has a full 12-month warranty against manufacturing defects from the date of purchase.

Packing List

- Radio Receiver x 1
- USB-C Cable x 1
- User’s Manual x 1
- Strap x 1
- AUX Cable x 1

Made in China

FCC Warning:
This equipment has been tested and found to comply with the limits for a Class B digital device, pursuant to part 15 of the FCC Rules. These limits are designed to provide reasonable protection against harmful interference in a residential installation. This equipment generates, uses and can radiate radio frequency energy and, if not installed and used in accordance with the instructions, may cause harmful interference to radio communications. However, there is no guarantee that interference will not occur in a particular installation. If this equipment does cause harmful interference to radio or television reception, which can be determined by turning the equipment off and on, the user is encouraged to try to correct the interference by one or more of the following measures:

- Reorient or relocate the receiving antenna.
- Increase the separation between the equipment and receiver.
- Connect the equipment into an outlet on a circuit different from that to which the receiver is connected.
- Consult the dealer or an experienced radio/TV technician for help.

Caution: Any changes or modifications to this device not explicitly approved by manufacturer could void your authority to operate this equipment.

This device complies with part 15 of the FCC Rules. Operation is subject to the following two conditions: (1) This device may not cause harmful interference, and (2) this device must accept any interference received, including interference that may cause undesired operation.

The device has been evaluated to meet general RF exposure requirement.
This equipment complies with FCC radiation exposure limits set forth for an uncontrolled environment.