INSTRUCTION

SMART TOILET

Concealed cistern series

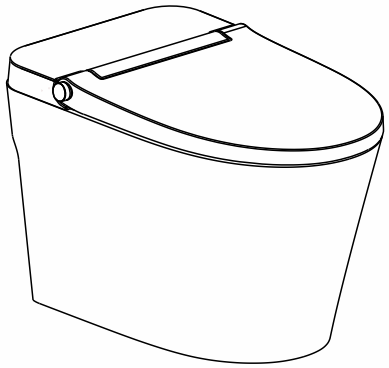

Thank you for purchasing our product.

Before using, please read the instruction carefully.

Please keep the instruction properly for further reference.

Catalogue

Component Name 02
Function Introduction 03
Attention 04
Installation Instruction 07
The Preparation of Use 12
Panel Instruction 13
How to Use 16
Function Setting and Adjustment 17
Cleaning and Maintenance 21
FAQ 25
Product Specification 26
Packing List 27
Operation Record 28

Component Name

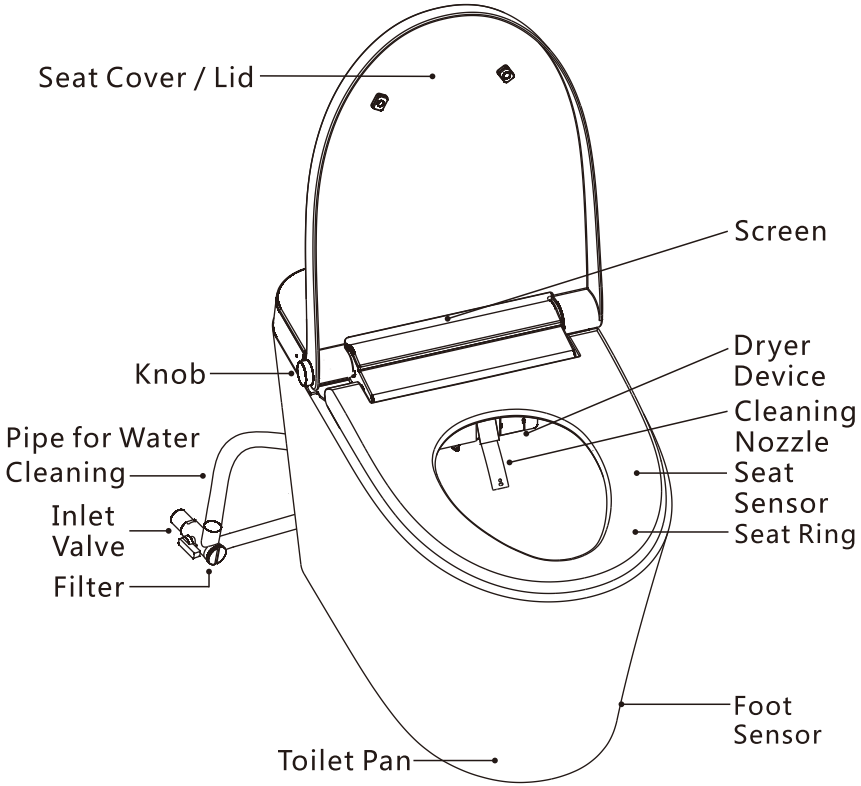

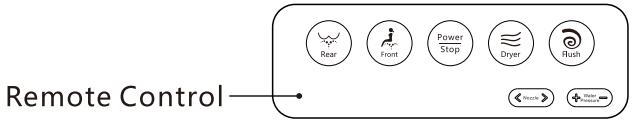

Function Introduction

Remark:The below function can be adjusted by remote control,detail will be listed later.

Auto lid---Auto open the lid when human body gets close to the front of toilet.

Foot sense to open the lid or the seat ring---Auto open the lid or the seat ring when human body gets close to the toilet.

Aperient---Single hole nozzle and strongest pressure.

H/C massage---Cleaning water will alternate hot and cold.

Rear cleansing---Single hole nozzle, powerful cleansing.

Moving rear cleansing---Nozzle moving to wash with wide range.

Front cleansing---Special nozzle hole for female, gently cleansing.

Moving front cleansing---Nozzle moving to wash with wide range.

Strength adjustment---Adjust the cleansing strength according to what you like.

Position adjustment---Adjust cleansing position by moving the nozzle forward and backward.

Cleansing water temp. adjustment---4 levels of cleansing water temp. circulation adjustment: normal/high/medium/low.

Warm air drying---Drying after cleansing.

Seat sense---All functions can be conducted after seated.

Seat ring temp. adjustment---Seat ring with built-in heating device; 4 levels of seat temp. circulation adjustment: normal/high/medium/low.

Remote control---All functions can be conducted by the remote control.

Auto flush---Auto flush after you use the toilet and stand up.

Flush by remote control---Flush by pressing the flushing button on the remote control.

Foot sense flush---Can flush by foot sense.

Night light---With light inside, convenient for night using.

Nozzle cleaning---Press this button when unseated, the nozzle will be self-cleaning, easy for daily maintenance.

Nozzle auto cleaning---Nozzle will be auto-cleaning before and after using.

Attention

WARNING

NO DISASSEMBLE

Please do not disassemble, repair or modification of this product.

◆May to cause fire,electric shock damage.

NO WATER

Please do not use wet hand to pull the plug.

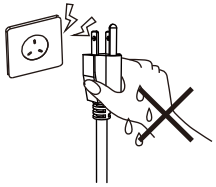

◆May to cause electric shock damage.

NO SOAKING

Please do not pour water、or detergent or deodorant, etc. on the equipment and the power plug.

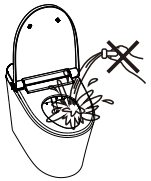

◆May to cause fire,electric shock damage.

PROHIBIT

Only support 220V AC.Please do not put through power supply before making sure the inlet valve open.

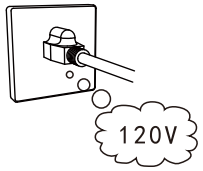

◆May to cause fire.

PROHIBIT

No scratch,damage the wire.No change,curve/tensile,bend.bind.bear.pirch the wire.No using loosening socket.

◆May to damage the wire,to canse electric shock or fire.

PROHIBIT

Do not connect with outer water supply

◆May to cause corrosion inside and fire.

◆May to cause inflammation of the skin.

GROUND WIRE

Please be sure to come it with the ground wires.

◆It is easy to get an electric shock when failure and leakage.

PROHIBIT

Do not put it in the wet area.

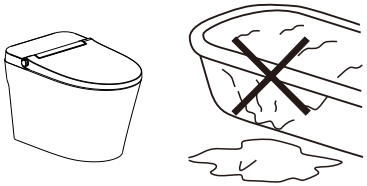

◆Easy to get an electric shock and fire.

ABIDANCE

Long time using,set the temperature to the normal level.

◆Long time using +1 level.may cause scald.

NO BURNING

Keep away from fire.

◆Easy to get on fire.

ABIDANCE

Chilren,old man.patient.tired person. drunk person.person who having sleeping pills.

The above stated people,need to be accompanyed with .and set the dry temperature on 1.

◆Long time uing +1 level.may cause scald.

PROHIBIT

Do not use wet hand to operate remote control, or to purl the remote.

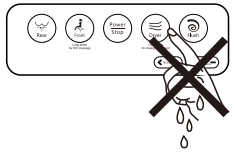

◆Easily lead to the remote control failure.

■ Intelligent toilet installation method

1. Confirmation of installation environment

Before installation, please confirm that the wall and floor tiles of the bathroom have been completed, and the sewage pipe, waterway andelectrical appliances have been reserved as shown in the following figure. And select the relative toilet based on the roughingin (300mm/400mm). Inlet pressure range : 0.15 Mpa (dynamic state)-0.75Mpa (static state) , Inlet water temperature : 4-35℃.

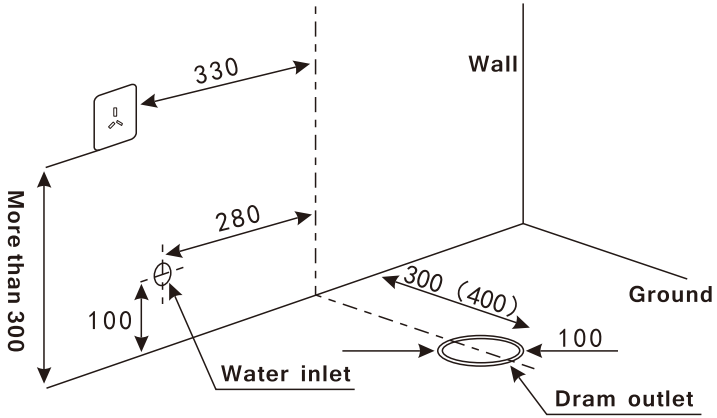

2. Assembly of special inlet valve

Install the inlet valve attached to the product to the outlet pipe.

◆ Note: Remove the inlet valve if it has been installed before.

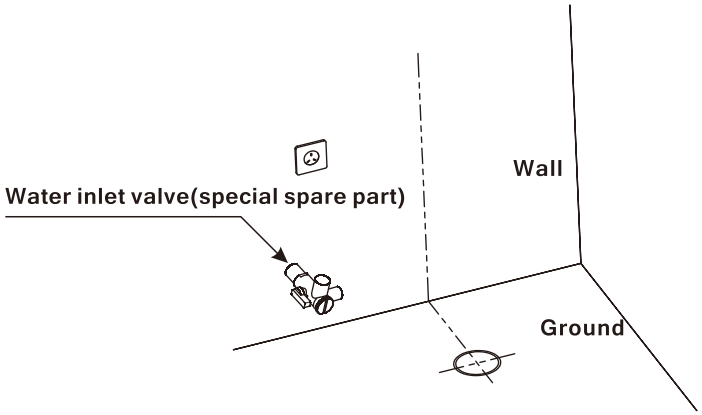

3. Installation and fixation of the toilet

<1.1> Align the "flange-ABS" on the ground drain outlet, adjust the "flange-ABS" arrow to point vertically to the wall, and mark the drilling position of the ground. Drill four holes in the ground according to the marks.

<1.2> Install "sealing wax ring-thin" at the bottom of "flange-ABS"

<1.3> Insert the "expansion plastic sleeve - small" completely into the small hole; Align the hole position and install "flange-ABS" and "sealing wax ring-thin"; Use "round head self tapping screw-5×36mm "to lock.

<1.4> Insert the "bolt-8×43mm" into the slot of" flange-ABS "; Adjust "bolt-8 x 43mm" to make the center line of the two bolts perpendicular to the arrow marked on the flange body.

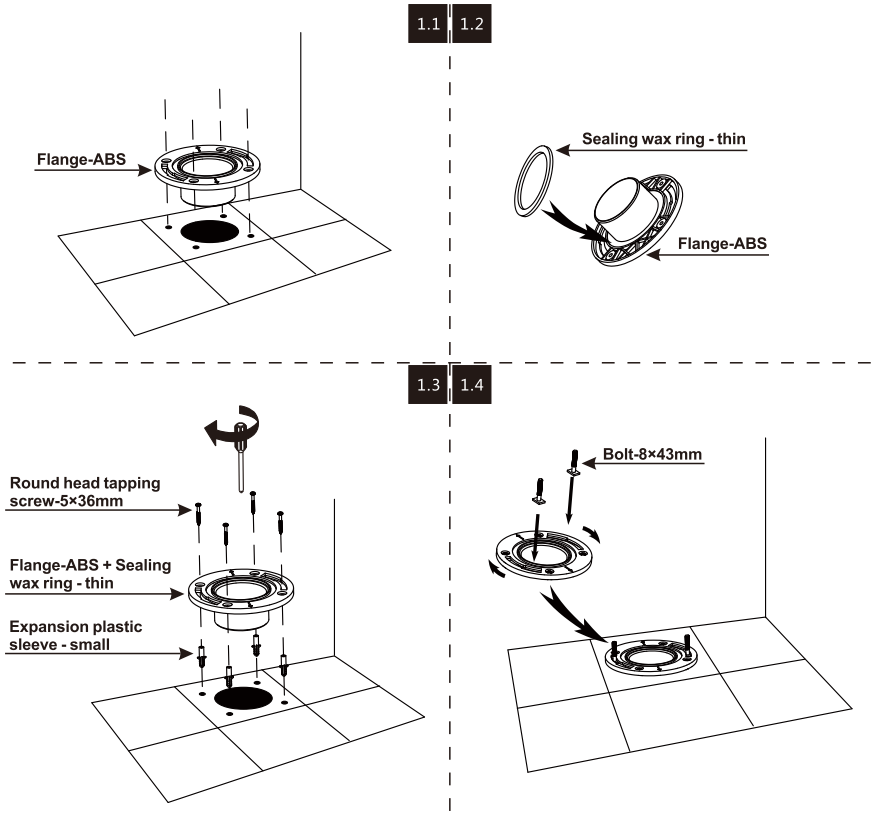

<2.1> Align the "sealing wax ring-thick" with the drain outlet and install it on the "flange-ABS". Insert two L-shaped plastic fixed blocks and gaskets into "bolt-7×43mm"; Then install the "large washer-8×24×1.8mm" and "nut 5/16" in sequence.

<2.2> Align the drain outlet of the intelligent toilet with the center of the flange for installation.

<2.3> Install the "T-shaped pad" on the small holes on both sides of the ceramic pan, and drive in the "flat head self tapping screw-5×75mm".

<2.4> Cover the "T-shaped pads" on both sides with the "decorative caps".

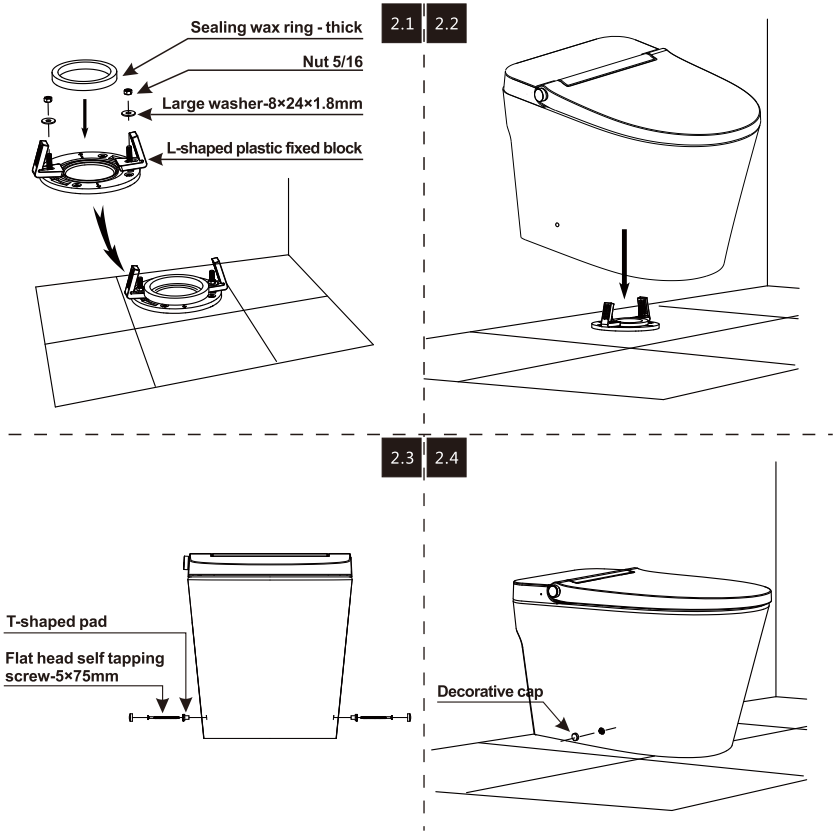

<3> Apply a layer of glass glue at the bottom of toilet.

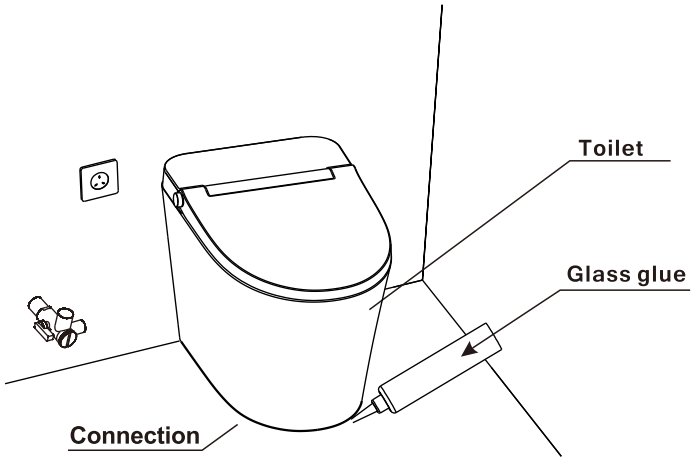

4. Connection for the inlet water pipe

Connect the inlet pipe with the inlet valve & filter cotton by using the tools like spanner.

◆ Notice: Turn on the water inlet valve after installation to check whether it leaks.

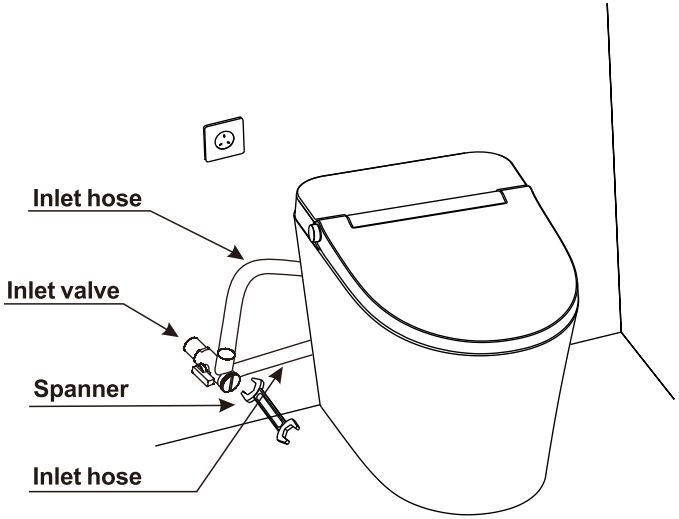

■ The installation method of remote control

1. Check the installation of remote control batteries.

Open the battery cover of the remote control and put two alkaline batteries (AAA) into the remote control one by one.

- When installing the battery, do not put the positive and negative sides of the battery in reverse.
- Do not use different or different types of batteries at the same time.
- Remove the battery when it is not in use for a long time.

2. Confirm the installation location of the remote control.

Install the remote control in a suitable area where it should be easy for getting or operating when you sit on the smart toilet.

3. Install the remote control bracket on the wall.

Tear off the protective tape of 3M tape on the back of bracket and apply to the selected dry tile surface.

4. Install remote control.

Align the remote control with the bracket, insert it from top to bottom, and the installation is completed.

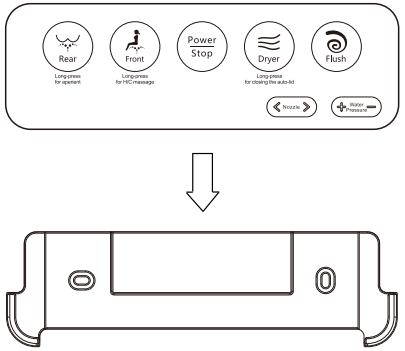

The Preparation of Use

1. Open inlet valve

Turn the valve switch counterclockwise to fully open the inlet valve.

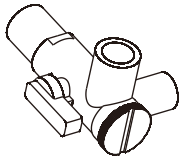

2. Plug the power plug into the socket.

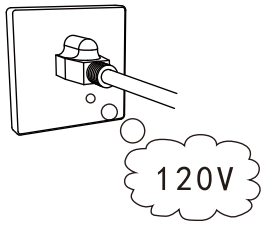

Plug the power plug into the 120V socket, and the intelligent toilet will be self -checked and run once, and the host is in standby state.

◆ Automatic lid and ring open reset by itself, no artificial obstruction.

◆ Do not use the wiring that exceeds the power supply specification such as the wiring board.

◆ The socket must have a reliable safety grounding.

3. Adjust the cleaning water temperature and the seat temperature to the appropriate level.

4. Referring to the function adjustment instructions, press the remote control operation button to realize each function.

Panel Instruction

This product could be conducted mostly by remote control, assisted by the host operate panel.

◆Remote control panel

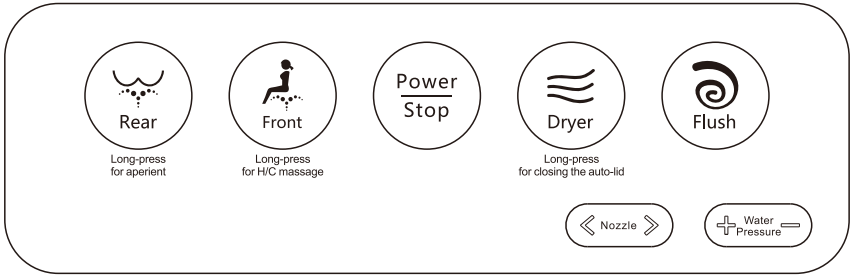

Front

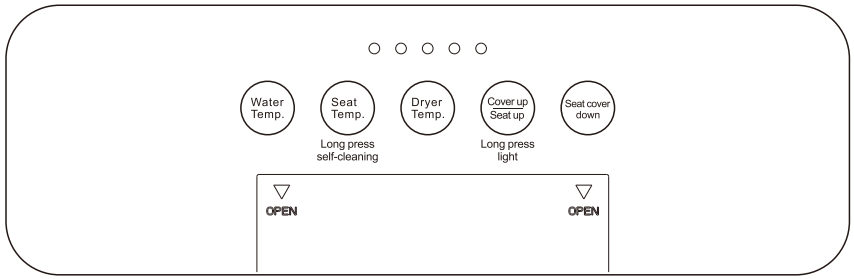

Back

This device complies with Part 15 of the FCC Rules. Operation is subject to the following two conditions: (1) this device may not cause harmful interference, and (2) this device must accept any interference received,including interference that may cause undesired operation

Changes or modifications to this unit not expressly approved by the party responsible for compliance could void the user’ s authority to operate the equipment.

NOTE: This equipment has been tested and found to comply with the limits for a Class B digital device,pursuant to Part 15 of the FCC Rules. These limits are designed to provide reasonable protection against harmful interference in a residential installation. This equipment generates uses and can radiate radio frequency energy and, if not installed and used in accordance with the instructions, may cause harmful interference to radio communications.

However, there is no guarantee that interference will not occur in a particular installation. If this equipment does cause harmful interference to radio or television reception, which can be determined by turning the equipment off and on, the user is encouraged to try to correct the interference by one or more of the following measures:

- Reorient or relocate the receiving antenna.
- Increase the separation between the equipment and receiver.
- Connect the equipment into an outlet on a circuit different from that to which the receiver is connected.
- Consult the dealer or an experienced radio/TV technician for help.

◆The host operate knob(with light)

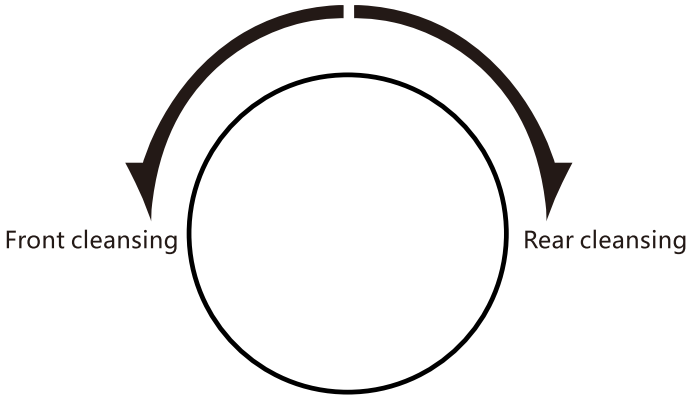

press the knot to switch to flush/Stop

- Under non-working condition, like no cleaning or drying etc, to press the knob vertically is to flush once; to long press the knob for 4 seconds is to switch on and off.
- In the state of seated on the toilet, rotate clockwise to turn on the rear cleansing function; rotate counterclockwise to turn on the front cleansing function; and press the knob vertically to stop the running function like rear cleansing, front cleansing or drying.
- When you start rear cleansing and front cleansing, rotate again in the same direction, than you will enter into drying function.

■ Main board screen

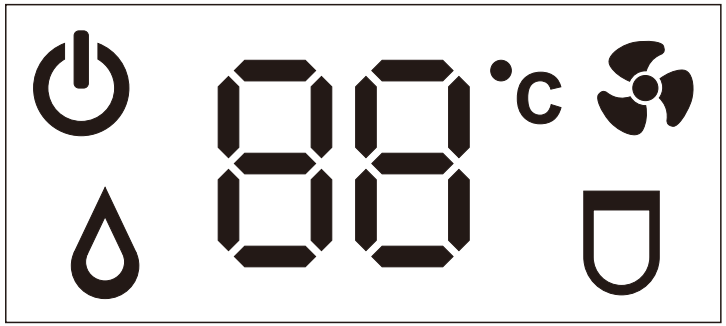

Power indicator: Light up when the host switches on.

Temperature level: Show the setting temperature when the host switches on.

Warm air temperature icon: When the icon lights up, it will show the setting warm air temperature.

Seat temperature icon: When the icon lights up, it will show the setting seat ring temperature.

Cleaning water temperature icon: When the icon lights up, it will show the setting cleaning water temperature.

● The temperature showed on the screen is the setting temperature. It will circularly show the cleaning water temperature, seat temperature and warm air temperature with 30 seconds interval.

● When the human body leaves the toilet sensor area, the screen will be automatically turned off after about 30 seconds.

How to Use

■ When seated on the seat

◆ When hear" di" , all the functions start up.

◆ Auto clean the nozzle once.

■ Start rear cleansing or front cleansing function

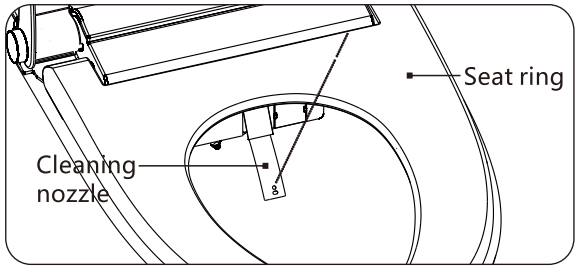

◆ Start the rear cleansing or front cleansing function by remote control.

◆ Adjust the cleaning position and water pressure by remote control.

◆ Start drying function by remote control.

◆ Press "stop" button, rear cleansing, front cleansing or drying stops working.

■ When unseated on the seat

◆ Auto flush the toilet once.

Function Setting and Adjustment

■ Sensor to open the lid

When people get close to about 30cm in front of the toilet, the lid will auto open. Long press the button of "Close the lid" on the remote control to turn on/off this function.

■ Lid/Seat ring open

This product has the function of lid/seat open. When people get close to the toilet, the lid and seat ring will be auto opened by foot sense.

Press the button "Open the lid / seat ring" on the remote control to open/ close the lid and seat ring.

Open the lid/seat by foot sense: In the state of unseated, when the seat/lid in the low position, sense the foot sensor of toilet side with your foot one time, the lid will open. And when the lid in the high position and the seat in the low position, sense the foot sensor of toilet side with your foot one time, the seat will open; when the seat and lid are in the high position at the same time, sense the foot sensor of toilet side with your foot one time, the lid and seat will close and flush one time (the lid will close but won't flush any more if last operation is flushing).

Open the lid/seat ring by remote control: In the state of unseated, press the button "Open the lid / seat ring" on the remote control to open/ close the lid and seat ring. Press the button "Close the lid", the lid and seat ring will be fallen to the low position, and the toilet will flush once (the lid will close but the toilet won't flush if last operation is flushing).If the lid and seat ring are both in the low position, press the button "Close the lid", there will be no operation for the toilet.

● When the toilet is in the state of rear cleansing, front cleansing, drying, etc, the function of Lid/Seat ring open can not be used.

■ Aperient

This product has the function of helping purge by using the single hole.

You can long press the button on remote control to enjoy it.

When you seat no it and function of helping purge do not on work, please press the function button of remote control to help purge, you will hear di and the function of helping purge will be on. And you can wertical pressure button to flushing or on remote control to stop.

● Under this situation, Water pressure could not be adjusted,but the position of spray and water temperature could be adjusted.

■ Rear cleansing

This product has the function of rear cleansing by using single hole nozzle.

You can press the button on remote control to enter the rear cleansing mode, by using single hole nozzle.

In the state of rear cleansing, you can press this button again to enjoy moving cleansing (the nozzle moves back and forth) . Then pressing this function button again, you can stop the moving cleansing (the nozzle stops moving) , and then switch the cleaning mode. And you can operate it circularly.

● The rear cleansing function will be off automatically in about 90 seconds. It can be directly switched to other functions or press the button to stop with in 90 seconds.

● The nozzle will auto-clean before and after rear cleansing function.

■ Lady cleansing/Front cleansing

This product has the function of front cleansing by using a feminine applicator for gentle cleaning.

Please press the button on the remote control and enjoy the gently care.

In the state of front cleansing, press this button again can enjoy moving cleansing (the nozzle moves back and forth). Then press this button once again, moving cleansing will stop (the nozzle stops moving) , switch to the cleaning mode. It can be operate circularly.

● Front cleansing function will be off automatically in about 90 seconds. It can be directly switched to other functions or press the button to stop it directly.

● The nozzle will auto-clean before and after Front cleansing function.

■ Water pressure adjustment

In the state of moving cleansing or Front cleansing, press the button to adjust the strength of water pressure according to your preference.

● 4 levels of water pressure are available. Press the button to start this function and adjust it to the comfortable water pressure intensity.

■ Nozzle position adjustment

In the state of moving cleansing or Front cleansing, press the button to move the nozzle back and forth and adjust to the appropriate cleaning position to your preference.

● 5 levels of nozzle position are available. Press the button to start this function and adjust it to the comfortable cleaning position.

■ Washing water temperature adjustment

Pressing the button on remote control, you will hear "di" and it will enter the state of water temperature . Then you can adjust it to the comfortable water temperature for cleansing.

● 4 levels of water temperature are available: normal, high, medium and low. The water temperature will switch to another level once you press the button of water temperature.

■ H/C massage

Long press the button of front cleansing , the water temperature will alternate hot and cold, changing from normal level to setting level. If set to normal level, then it will alternate from normal level to low level.

■ Drying function

Press the button on the remote control, it will dry the wet part.

● The drying function will be off automatically in about 3 minutes. You can directly switch to other functions or can press the button to stop it directly within 3 minutes.

■ Dryer temperature adjustment

Pressing the button on remote control, you will hear"di" and it will enter the state of dryer temperature . Then you can adjust to the comfortable dryer temperature.

● 4 levels of dryer temperature normal are available: normal, high, medium and low temperature .The dryer temperature will switch to another level once you press button of dryer temperature.

■ Seat ring temperature adjustment

Press the button on remote control, you will hear "di" and it will enter the state of seat ring temperature setting . Then you can adjust to the comfortable seat ring temperature.

● 4 levels of seat ring temperature are available: normal , high, medium and low temperature. The seat ring will switch to another level once you press the button of seat ring temperature.

■ Night light

This product is equipped with lighting function, which is convenient for nightly use.

● Turn on/off the lighting function by long pressing remote control button , the glim lamp will be on or off.

■ Nozzle cleaning

Long press the button , water will flow out from nozzle to clean.

● Only when no one is on seat, the function of nozzle cleaning can be on.

● The nozzle cleaning function will be off in about 60 seconds. Press button on remote control to finish it.

■ Power button

Press the power button on remote control to start or close the host system by .

■ Flush by remote control

Press the flush button to flush the toilet once. Continuous flush needs 30 seconds interval.

● If the cleaning function turn on, the flush operation would not be available.

■ Flush by foot sensor

Designed for men to urinate, no need to bend down to find the buttons or remote control to flush. Foot sensor can achieve flush.

◆ Using capacitive induction technology. Stretching your foot lightly against the sensor sign on the ceramic surface, it will achieve flush after your foot leaves.

Cleaning and Maintenance

Clean and maintain power plug

Please clean the power plug regularly: when cleaning, remove the power plug from the socket and wipe it with dry cloth.

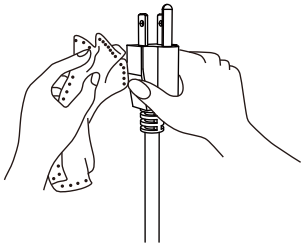

● Dust accumulated on the power plug may cause fire.

Clean and maintain the main engine part of intelligent toilet

When cleaning the surface of the main engine, please wipe it with a soft wet cloth.

〈1〉 When cleaning and maintaining, please pull the power plug out of the socket to avoid contact with water.

〈2〉 If the surface has stubborn blot, you can use a soft wet cloth with kitchen detergent (neuter) to swab.

Clean and maintain the ceramic part of intelligent toilet

You can pour a neutral toilet cleaner into a soft brush or sponge and rinse with tap water.

〈1〉 Do not use detergent or disinfector contained with chlorine or acidity.

〈2〉 Do not use brushes with abrasive materials.

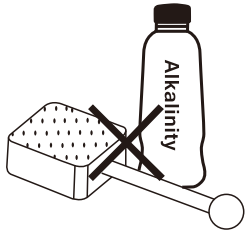

Cleaning and maintain of nozzle

In the normal operating status, please press the nozzle cleaning button (Self-cleaning) on remote control, the nozzle will stretch out and auto-clean. You could use the tooth-brush to clean it at the same time. Please do not stretch the nozzle by force.

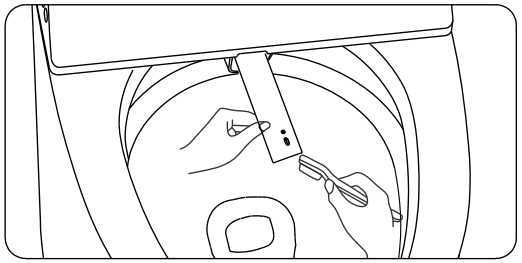

Cleaning and maintain of water inlet filter

〈1〉 Shut off the inlet valve first to stop water supplying .

〈2〉 Use coin to open the filter counterclockwise, then clean it by brush or water directly.

〈3〉 Reinstall the filter and screw up. Do not leave behind the seal ring of filter.

〈4〉 Open the inlet valve to check if leakage. if there is any leakage , please recheck and reinstall .

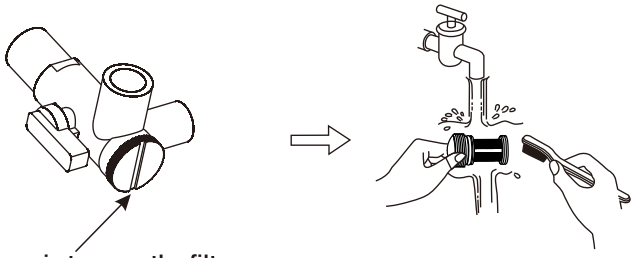

Use the coin to open the filter

■ Not to use for a long time

When not to use this product for a long time , please do the following operation : draining out all the water in smart toilet to prevent water pollution or frozen; shutting off the power; taking out the batteries in the remote control.

〈1〉 Shut off the inlet valve first , stop supplying water.

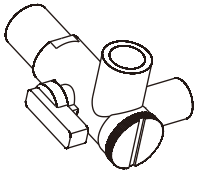

〈2〉 Pull off the plug from the power socket.

〈3〉 Remove the inlet pipe from the the inlet valve to drain out the water inside pipe and reinstall the pipe.

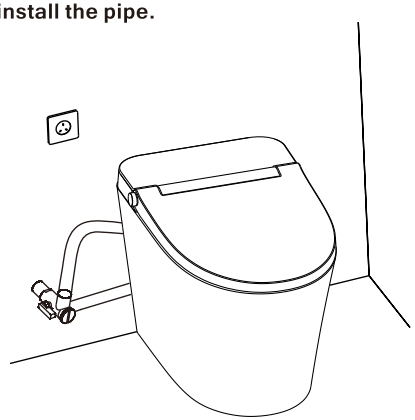

◆ When reusing the product , you can just open the inlet valve, put the plug into the socket and starting up.

■ Frozen

In winter, the intelligent toilet may be damaged for the frozen inside. To prevent the frozen, please keep the power on and operate as follows :

◆ Set the temperature of seat and water to the highest level.

◆ In case the inlet pipe frozen inside, the nozzle can not work, please use warm cloth to heat the inlet valve or open the heating also can fixed this problem.

■ Moisture condensation

Because the temperature and humidity are different between indoor and ceramic pan/seat cover , the ceramic pan and seat cover may be moisture condensation. Please change air completely in the bathroom in case of moisture condensation.

◆ In case of moisture condensation, please use the dry cloth to scrub.

■ Change the batteries in remote control

Change new batteries when remove control insensitive or the indicator could not work.

◆ Do not mistake the positive pole and negative pole when install the batteries.

◆ Do not mix the different type of battery.

◆ Please take out the battery if not using for a long time.

FAQ

Some problems can be fixed by simple operation. Please confirm below items before entrusting service.

Problem		Reason	Solution
Not working after pressing the power button(no light)		The socket power on or not?	Please check if power out or tripping operation
		Does power plug switch close or not? Are power indicator on plug off?	Press the reset button on power plug to light the indicator.
		Is it the power plug connected well?	Reconnect the power plug
Remote control is insensitive or not working		The battery run out of power	Change new battery
The temperature of seat cover, washing water and dryer are not heat enough.		Check if the setting of remote control correct or not?	Setting related temperature
		Check if it is in power-saving state?	Close the power-saving function
Button not working		Some buttons are no response on normal working state.	Some operations can not working in the same time, please read the instruction carefully.
Nozzle could not spray water or low spray water pressure	Can hear alarm	The water supply cut off?	Waiting for water supply
		Inlet valve open or not?	Open the inlet valve
		The filter blocking	Clean the filter
	Can not hear alarm	Low water pressure or you have set the low level water pressure on remote control.	Press the button (Water Pressure) to increase the water pressure
		Have you hear "di" when sitting? Whether it is in the range of the sensor?	Please sit down on the seat cover and make sure you have proper posture

Product Specification

Voltage		120V~ 60HZ
Power rate		1300W(inflow15℃(+/-1℃), water pressure 0. 24Mpa, max level for rear washing)
Length of power line		1M
Water pressure		0. 15Mpa(dynamic pressure)~0. 75Mpa(static pressure)
Water level		Level 1
Flushing quantity		1.11gPf(4.2Lpf)
Cleaning water consumption		Less then0.7L/min
Energy consumption per unit cycle		Less then0.42kW・h
Product size		LWH:680*400*445mm
Weight		43KG
Cleaning device	Heating way	Instantaneous hot water heater
	Water pressure	4 level to be adjusted
	Water temperature	4 level to be adjusted: low level 95℉; medium level 100℉; high level 104℉; normal level.
	Max power rate for water heating	1300W
	Safety device	Thermal cut-off
Heating seat cover	Power rate	40W
	Seat over temperature	4 level to be adjusted: low level 95℉; medium level 100℉; high level 104℉; normal level.
	Safety device	Thermal cut-off
Drying device	Wind speed	More than 4m/s
	Power rate for air heating	270W
	Wind temperature	4 levels to be adjusted: 95℉-131℉(can set the normal level)
	Safety device	Thermal cut-off/recoverable heat protector

Packing list

Dear customer :

Please open the packing box of the product and count the following items in the box :

1. One pc of toilet
2. One set of instruction manual
3. One pc of remote control (with mounting bracket)
4. One pc of dedicated angle valve
5. One pc of ceramic installation package

Operation Record

After installation,please try to operate the toilet and write down result below.

Item	Result
Power socket is AC 120V+/-10% , load more than 2000W ?	
Power socket loose or not? And connected well or not ?	
Do the connection of fittings loose? or found any leakage ?	
Lighting up on toilet ?	
Nozzle leakage ?	
Function of rear washing is well or not ? (including levels adjustment)	
Function of lady washing is well or not ? (including levels adjustment)	
Function of wide washing is well or not ? (including levels adjustment)	
Function of water temperature is well or not ?(including levels adjustment)	
Function of seat cover temperature is well or not ? (including levels adjustment)	
Function of nozzle cleaning is well or not ?	
Remote control function is well or not ?	
Function of manual flushing and auto-flushing is well or not ?	
Function of drying is well or not ? (including levels adjustment)	
Remark:	

Shop:	Installers:	Checking personnel:	Date: