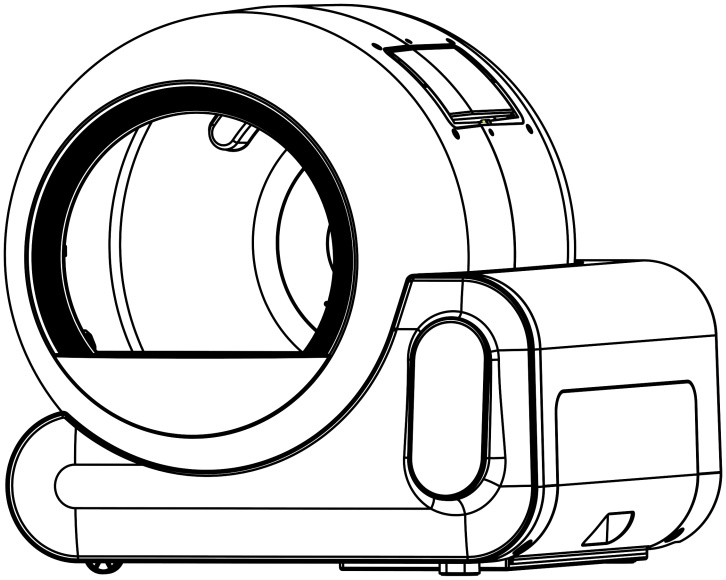

Smart Cat Litter Box

Quick Start Guide

Please read this product manual carefully before use and keep it properly!

1. Please note that this product can only be connected to the matching power adapter and must not be used together with the adapters of other electronic products.
2. When installing or cleaning the machine, please disconnect the power supply first. After cleaning, install and fix all accessories before connecting the power supply.
3. Place it in a safe place to avoid children's touch.
4. This appliance can be used by children aged from 8 years and above and persons with reduced physical, sensory or mental capabilities or lack of experience and knowledge if they have been given supervision or instruction concerning use of the appliance in a safe way and understand the hazards involved.
5. Children shall not play with the appliance. Cleaning and user maintenance shall not be made by children without supervision.
6. the appliance is only to be used with the unit provided
7. Do not dispose of electrical appliances as unsorted municipal waste, use separate collection facilities. Contact you local government for information regarding the collection systems available.If electrical appliances are disposed of in landfills or dumps, hazardous substances can leak into the groundwater and get into the food chain, damaging your health and well-being.

During installation, use and maintenance, do not operate with wet hands to avoid electric shock.

一、Product Introduction

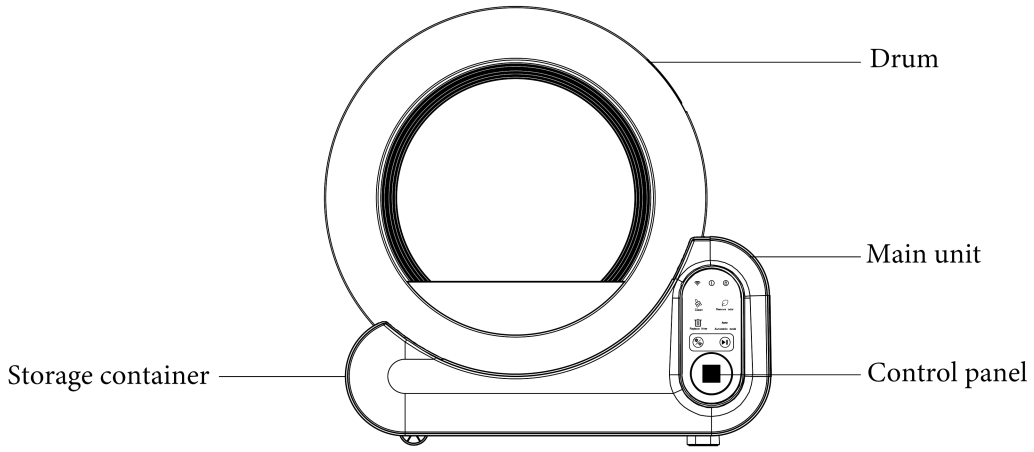

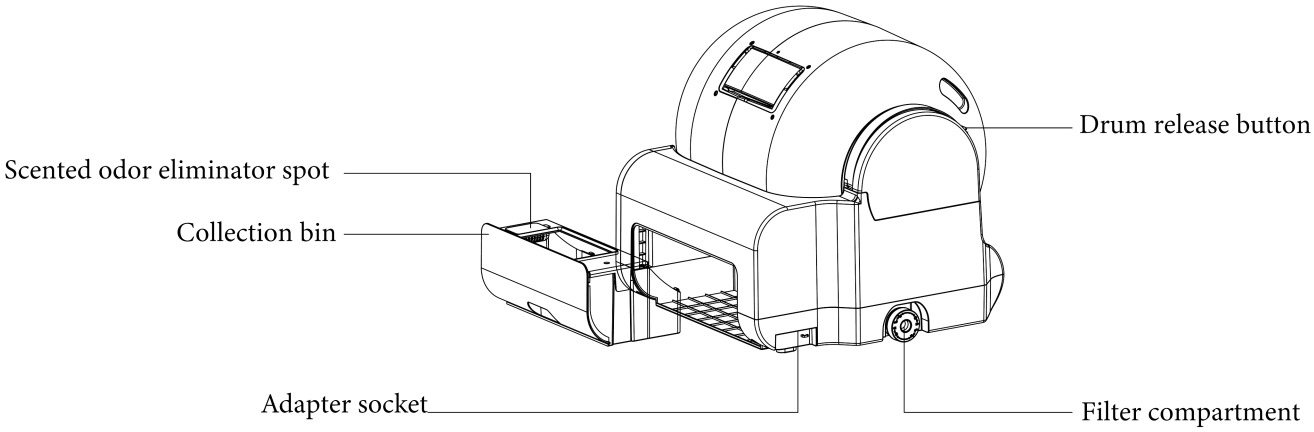

2. Packing List

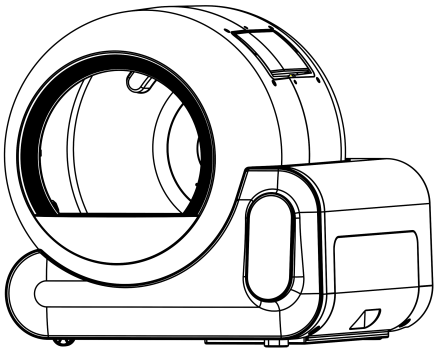

Main unit*1

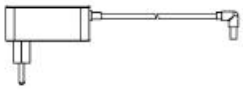

Adapter*1

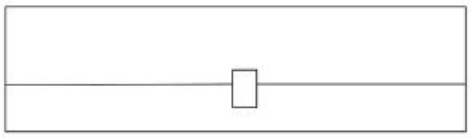

trash bag*1

Manual*1

Scented odor eliminator*1

3. Unpacking Operation

* Make sure your cat weighs more than 1.5KG to ensure the maximum safety of the product and your pet *

1. Check whether all items are complete according to the (product introduction) diagram.
2. Place the products properly according to the (product introduction) illustration.
3. Plug one end of the power adapter that comes with the product into the power port on the back of the product (do not power it on yet) as shown in Figure (1).
4. Check whether the garbage bag is properly put on and place the deodorizing bag, as shown in Figure (2), and push the feces collection bin back to its original position.
5. The carbon cartridge needs to have both sealing stickers removed before being installed into the host.
6. Check the usage environment.

① Make sure the product is placed on a flat, hard surface and there is no foreign matter on the bottom. ------As shown in Figure (3)

② Make sure the product is not resting on any objects and there is no foreign object on top. ------As

shown in Figure (4)

③ Make sure the product is close to the WIFI signal source and away from other household appliances with strong interference. ------As shown in Figure (5)

7. Self-test operation (power on for this step).

After power is supplied, the device starts up and automatically enters the self-test state. The next step can be performed only after the self-test is completed.

8. Refer to (Network Configuration Operation) to perform network configuration.

9. Add enough cat litter to the drum, below the Max scale line. After adding cat litter, the length of the selected cat litter must be shorter than 1.2 cm and the diameter must be less than 3 mm. (You can first select the type of cat litter and the number of times to use it in the APP), then press Execute ⏯ to clean once to smooth the cat litter.

10. After completing the above steps, the cat litter box can be used normally.

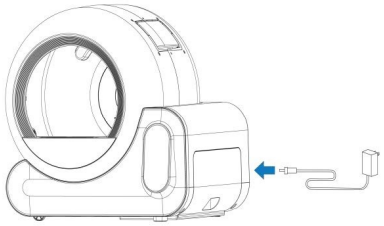

(1)

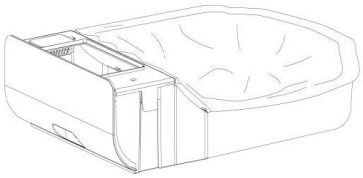

(2)

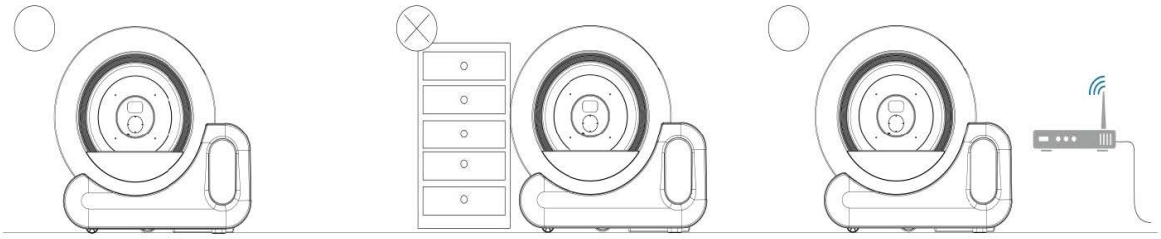

(3) (4) (5)

4. Control Panel

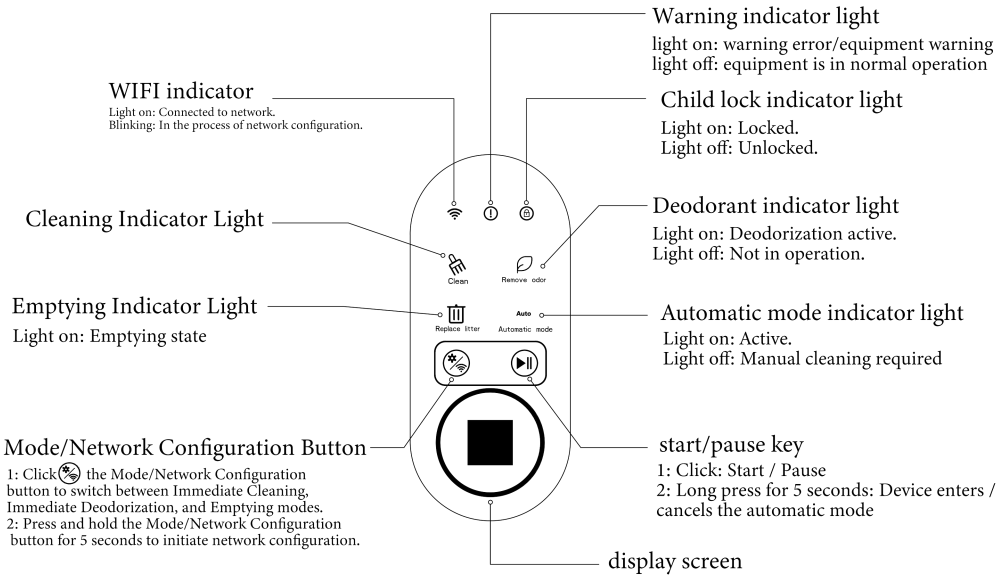

5. Button Operation Instructions

Function keys		Procedure	illustrate
Start/Pause button		1: Click : Start / Pause 2: Long press for 5 seconds: the device enters/cancels automatic mode	
Mode/network switch key		1: Click the "Mode/Network Distribution" button to switch between the three modes: immediate cleaning, immediate deodorization, and clearing. 2: Press and hold the (Mode / Network Configuration) button for 5 seconds to configure the network.	
Child lock to prevent accidental touch	+	1: Press and hold the "Mode/Network Configuration" and "Start/Pause" buttons for 5 seconds at the same time to turn on the child lock function of the device. 2: Press and hold the "Mode/Network Configuration" and "Start/Pause" buttons for 5 seconds to unlock the child lock.	
WIFI network key		Press and hold the " " (Mode/Network Configuration) button for 5 seconds, the device enters the network configuration state, and the "WiFi indicator light" flashes.	The WiFi network indicator light is always on, which means you are connected to the network.

Automatic mode	Auto Automatic mode	Press and hold the " ⏯" (Start/Pause) button for 5 seconds, the device will enter automatic mode. After the cat finishes using the toilet, the device will automatically operate and clean the waste into the feces collection bin.	Press and hold the " ⏯" (Start/Pause) button for 5 seconds, the indicator light goes out and the device cancels the automatic mode.

6. Other operations

01Replace cat litter

Note: It is recommended to replace the garbage bags before clearing the warehouse.

1. Short press the mode switch button once until it switches to clearing mode. Replace litter
2. Press the Start/Pause button once to clear the warehouse (Note: If the warehouse is not completely cleared, you can perform another clearing operation.)
3. After the drum is reset, pull out the feces collection bin, seal it and discard the waste sand, put on a new garbage bag and push the feces collection bin back to its original position.
4. Add enough cat litter into the drum to below the MAX scale line. After adding the litter, short press the Start/Pause button to perform a cleaning once to smooth the cat litter.
5. After replacing the cat litter, you need to recalibrate the number of times the cat litter is used in the APP.

02 Activated carbon replacement

1: For the first use, take out the activated carbon cartridge, tear off/poke open the stickers at both ends, and push them back to their original positions (Note: Replace every six months)

2: Unscrew the lid of the carbon box and pour out the old activated carbon, put the new activated carbon back into the carbon box, screw back the lid and push it back to its original position to replace the activated carbon.

(Note: Available at designated sales outlets/agents.)

Adding cat litter and precautions

1: After the self-test is completed, the screen will show the cat litter icon, manually add 2-3kg cat litter (below the MAX scale line), short press the start/pause button , the machine will automatically analyze the number of times the cat litter can be used and synchronize the number with the APP. (If there is no operation, the machine will automatically default to 40-60 times, depending on the weight of the cat litter)

VII. Maintenance, cleaning and precautions

Note: The main unit contains electronic components, which cannot be washed directly with water, but can only be wiped with wet wipes

1. Refer to the steps in (Replacing cat litter), empty the cat litter and turn off the power.
2. Remove the roller (note that you need to press the roller release button first)
3. Pull out the stool collection bin and take out the deodorizing bag
4. Take out the carbon box (it is recommended to replace the activated carbon in the carbon box every six months)
5. The drum, feces collection bin, three-proof cat litter mat, pad, cat litter filter, and litter collection bin components can be washed directly. Be sure to wipe them dry and air dry after washing (Note: remove other components as shown in the picture)
6. After cleaning, put the new deodorant package back into the deodorant cover, and assemble the other parts in reverse order, then you can use it normally.

8. Basic parameters

Product Parameters	
Product Name	Smart Cat Litter Box
Production model	AL70A
Main Materials	PP ABS
Product size	550X540X516mm
Adaper	Input 100-240V~ 50-60Hz 0.8A Output 12V⎓ 2.0A
Host input	12V⎓ 2.0A
Rated Power	24W
Scope of application	1.5-10KG
Machine weight	10.2KG
Recommended pet	cat

types	
Operating frequency	2412MHz-2484MHz
Maximum transmission power	18dBm

9. APP download and connection

1. Download and install the APP

- Solution 1: Open Google Play/App Store on your phone, search for "AigoSmart", download and install it;
- Solution 2: Scan the QR code on the left to download and install "AigoSmart".

2. APP registration and login

Turn on mobile phone positioning, open the "AigoSmart" APP to register and log in, and make sure that WiFi and Bluetooth permissions are turned on, and allow our APP to access (use);

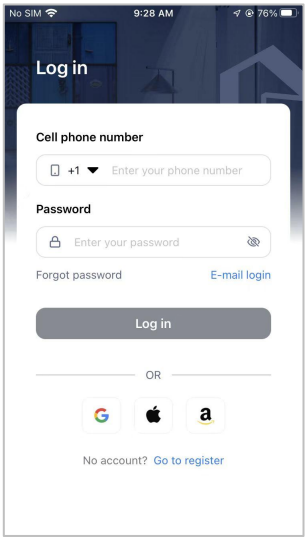

3、Equipment network configuration

1) After successfully installing the device, use the feed button to verify that the device can be controlled;

2) When the device is powered on, log in to the AigoSmert APP and click the [Add Device] button in the pop-up window to add the device. If the device is not found after opening the APP and waiting for a while, you can find the device by clicking the "+" in the upper right corner.

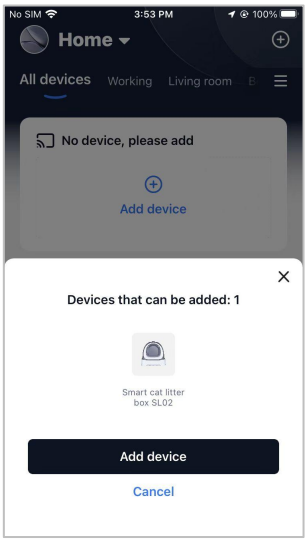

3) In the automatic discovery interface, click the + sign on the right side of the device, enter the correct WiFi password, and wait for the device to be successfully connected to the network;

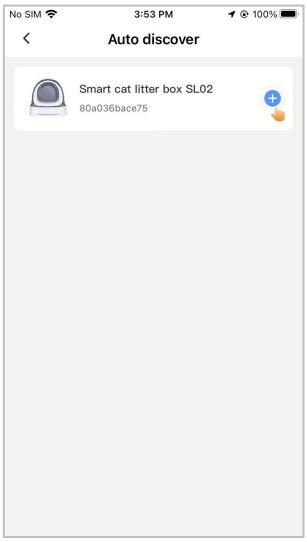

Others: If you cannot find the device or pair with the network successfully, click "+" in the upper right corner of the homepage, find the Pet-Smart Cat Litter Box SL02 (Bluetooth) entry in the Add Device interface, and complete the operation step by step according to the prompts of the APP.

4、Screenshot of APP control interface

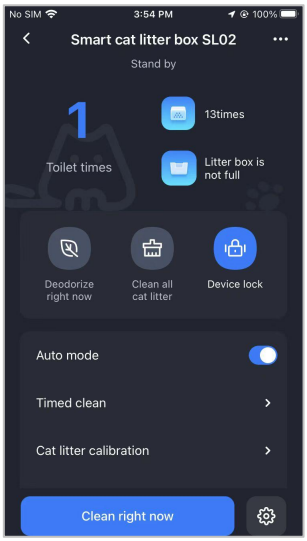

Through the APP, you can set functions such as immediate cleaning, immediate deodorization, clearance, automatic mode, scheduled cleaning, do not disturb mode, etc. You can also check your pet's toilet data.

Tips: Due to the continuous development and upgrade of the APP, the APP page may be partially fine-tuned. Please refer to the actual version. For detailed instructions on how to use the host functions involved in the APP interface, please refer to the relevant instructions on the APP.

5、other

This product supports Amazon Alexa and Google Home app control.

Please scan the QR code to get more details information of operation guidance.

Note : Some devices feature different display interfaces due to different functions.
The free application “ AigoSmart ” is compatible with mobile devices. The versions of IOS13.0, Android5.0(and higher) offer a better experience.
After entering the “ more settings ” page, you can enter “ help center ” for latest user guides. If your problems haven ' t been solved,leave a feedback,we will wholeheartedly give you the best service.

10. Abnormal Situation Handling

Abnormal situations	How to deal with it	Procedure
The equipment stops running due to abnormal fullness of the feces collection bin	Manual release	This pattern will appear on the display Replace litter To clean the feces collection bin, press the start/pause button and smooth the cat litter once to remove the full bin icon. Replace litter
The device is in clearing mode, the cat is temporarily suspended during operation, and a cat entry warning appears during clearing.	Manual release	Press the Start/Pause button again to restart the device
The drum does not rotate during self-test	Manual release	Check whether the roller and the main engine gear assembly are properly placed
When the deodorizing function is not good	Manual release	Check whether the carbon box is blocked or replace the activated carbon (replace once every six

		months)
Drum door stuck	Manual release	Check the door on the drum to see if there is any foreign object stuck
The weighing data is inaccurate (Inaccuracies caused by applicable environment have been excluded)	Weighing Calibration	1 Prepare reference objects (the whole machine must be empty during calibration.) You can use 1.5kg of items, 1.5L of mineral water or 3 bottles of 500mL of mineral water. 2 Turn off the power and restart. 3 After the drum rotates, put a 1.5kg weight into the drum. 4 Press and hold the Start/Pause button, release it after hearing a prompt tone, the number 1500 will be displayed on the display, and then two prompt tones will sound, and the weighing calibration is completed.
After the network configuration is successful, the APP will show that the remaining times of the device are 0	Manual release	Through the (Cat Litter Calibration) function on the APP, the status of the device and APP can be synchronized.

Electrical and electronic repair and recycling

Proper disposal of this product	
	This symbol indicates that this product should not be disposed of with your entire household waste. To prevent possible harm to the environment or human health from uncontrolled waste disposal , waste should be recycled responsibly to promote the sustainable reuse of material resources . To return your used device, please use the return and collection system or contact the retailer where you purchased the product . They can take this product for environmentally friendly recycling.

Warranty period: In the European region, if consumers purchase relevant products from distributors, they will enjoy the relevant legal rights stipulated in the Consumer Rights Code. Professional customers will benefit from the relevant rights protection regulations in the Civil Code.

FCC Warning

This device complies with part 15 of the FCC Rules. Operation is subject to the following two conditions: (1) This device may not cause harmful interference, and (2) this device must accept any interference received, including interference that may cause undesired operation.

Note: This equipment has been tested and found to comply with the limits for a Class B digital device, pursuant to part 15 of the FCC Rules. These limits are designed to provide reasonable protection against harmful interference in a residential installation. This equipment generates, uses and can radiate radio frequency energy and, if not installed and used in accordance with the instructions, may cause harmful interference to radio communications. However, there is no guarantee that interference will not occur in a particular

installation. If this equipment does cause harmful interference to radio or television reception, which can be determined by turning the equipment off and on, the user is encouraged to try to correct the interference by one or more of the following measures:

—Reorient or relocate the receiving antenna.

—Increase the separation between the equipment and receiver.

—Connect the equipment into an outlet on a circuit different from that to which the receiver is connected.

—Consult the dealer or an experienced radio/TV technician for help.

Note: The Grantee is not responsible for any changes or modifications not expressly approved by the party responsible for compliance. such modifications could void the user's authority to operate the equipment.

The device has been evaluated to meet general RF exposure requirement.

To maintain compliance with FCC's RF exposure guidelines, the distance must be at least 20 cm

between the radiator and your body, and fully supported by the operating and installation