SPECIFICATION

Shenzhen Guandetong Electronic Limited

Shenzhen Guandetong Electronics Co., Ltd

2.4G B flat copper tube antenna **1.13** gray wire length **255**MM with terminal

Company address: 3rd floor, building d, huanguan nan maoyuan industrial park, guanhu street, Longhua district, Shenzhen tel: 0755-88298396 fax: 0755-89733896

http://www.szgdtrf.com

1.Photo

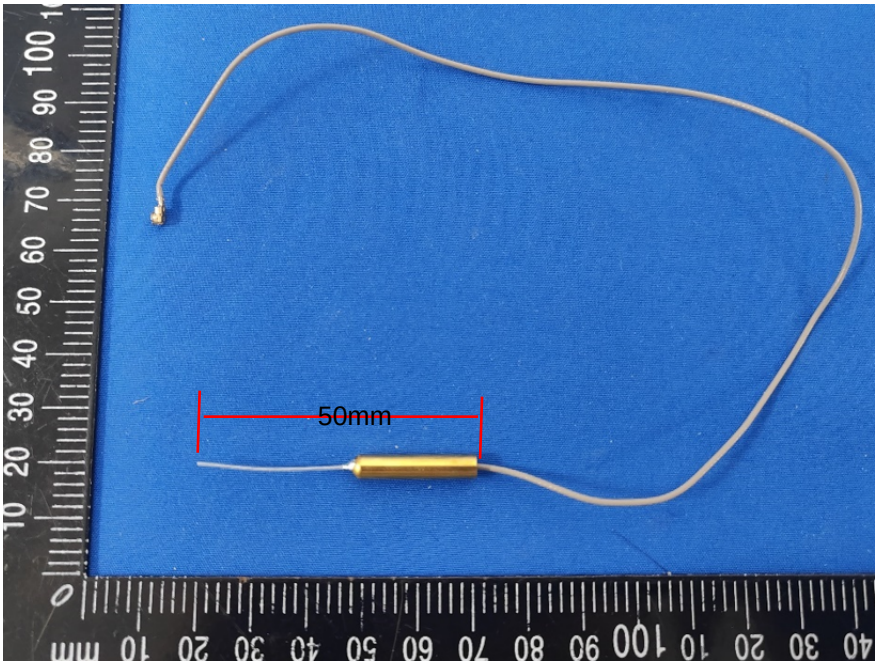

2. product parameters

Product Test			
Name of Product **(Name)**	Antenna **2.4G**	Type of product **(Model Type)**	
Index of electrical performance **(Electrical Specifications)**			
Range of Frequency **(Frenquency Range)**	2400MHz-2500MHz	Polarization mode (**Polarization**)	Vertical
Impedance input **(Impedance)**	50Ω	radiation direction	omni-directional
Standing wave ratio (**VSWR**)	≦ 2.0	Capacity of Power **(Power)**	50W
Gain	2dBi	bandwidth **(Bandwidth**	100MHz
Mechanical **(Mechanical Specifications)**			
(Dimensions)	104.7*12.8-+0.3mm	Color of shell **(Radome Color)**	White
Type of connector **(Connector)**	IPEX Generation	**Cable Length**	255-+5mm
Radome Material Material Housing	ABS		
Working temperature **(Working Temperature)**	-40 ℃-+85 ℃	Storage temperature **(Limit Temperature)**	-40 ℃-+85 ℃

3、VSWR 、Return loss 、Smith

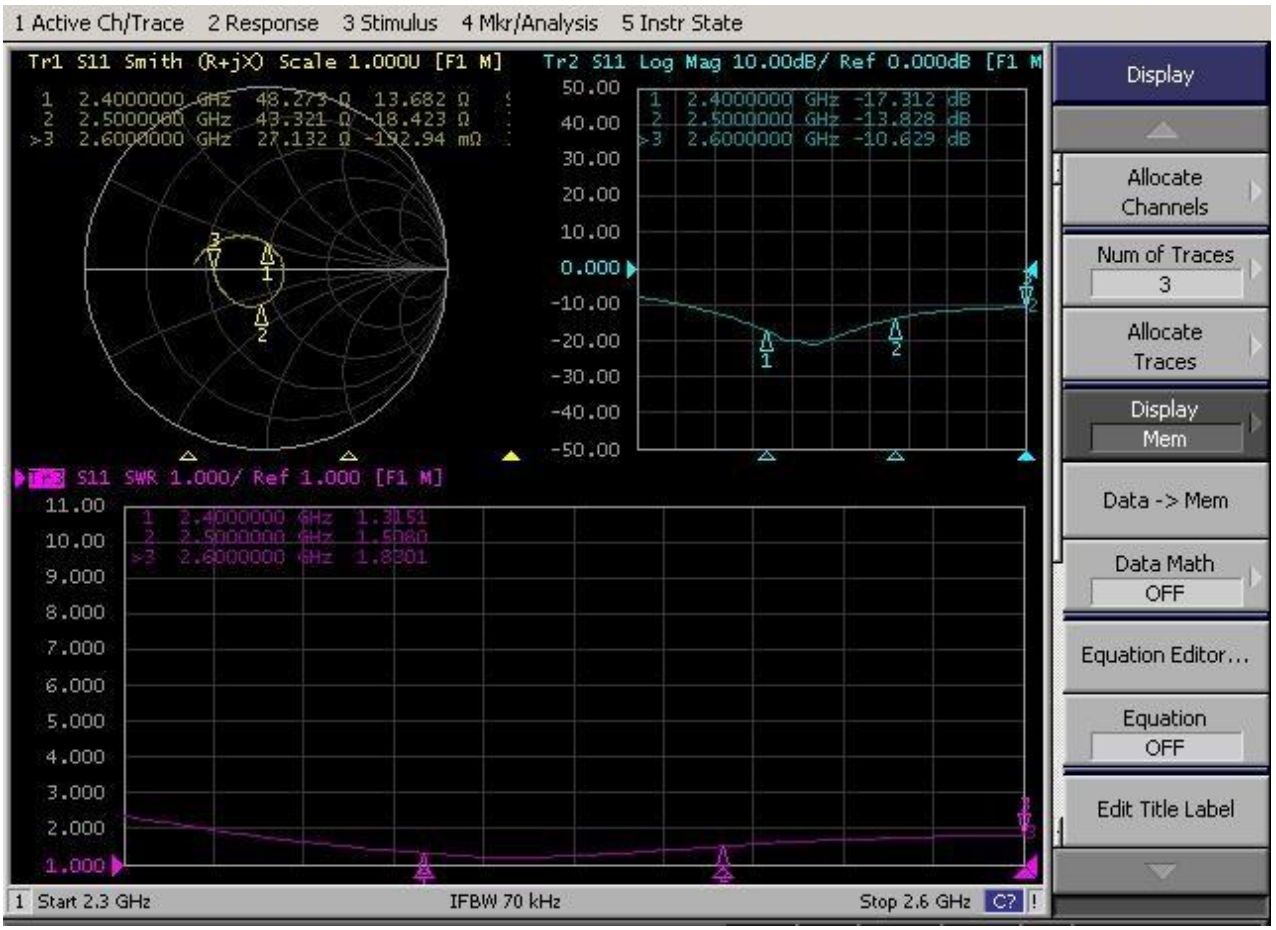

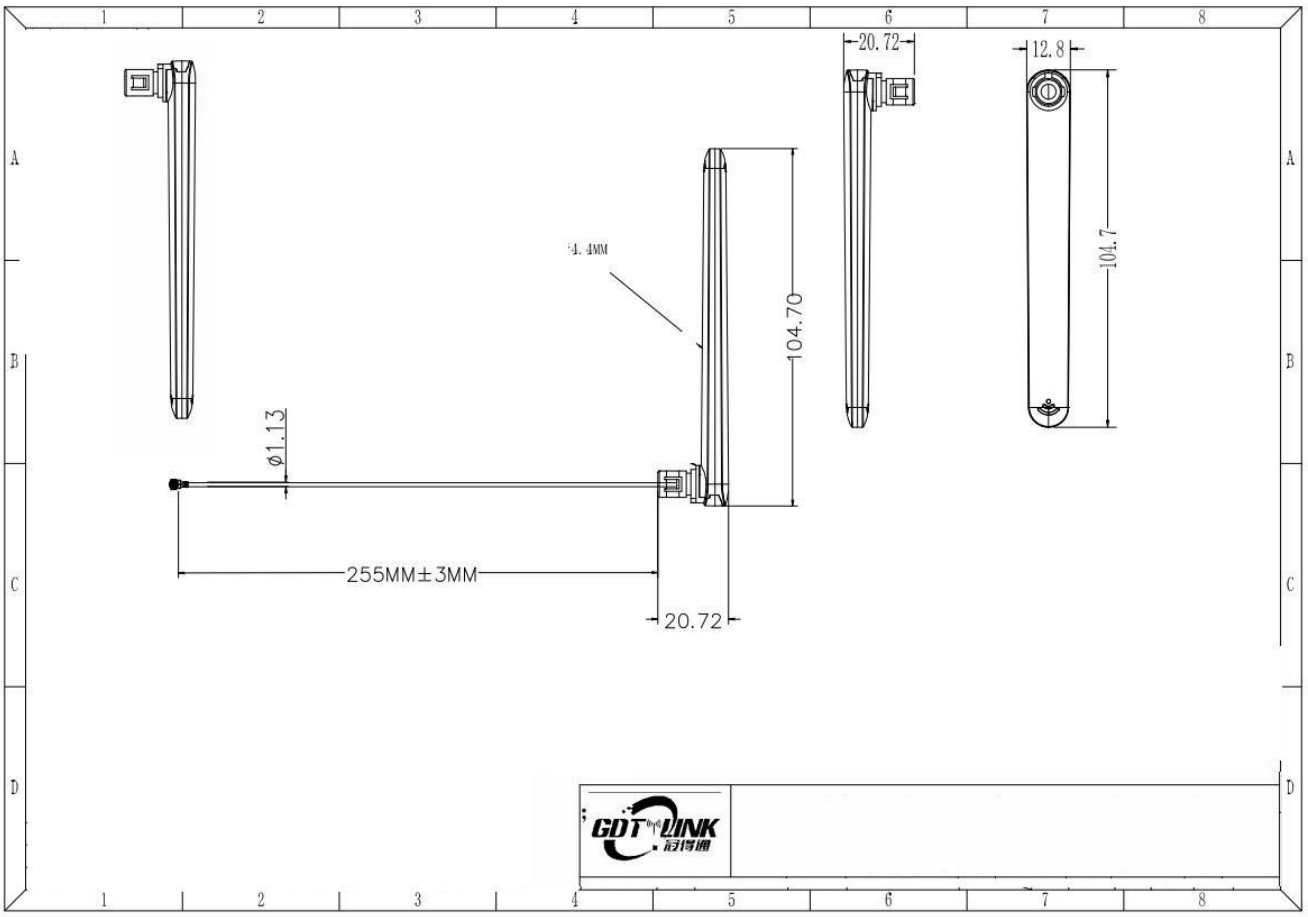

4.（Effi./Gain）test data

Freq (MHz)	Effi (%)	Effi (dB)	Gain (dBi)
2400	43.74	-3.59	1.41
2410	41.66	-3.8	1.36
2420	42.13	-3.75	1.61
2430	40.26	-3.95	1.57
2440	39.81	-4	1.64
2450	40.41	-3.94	2.00
2460	38.83	-4.11	1.44
2470	38.49	-4.15	1.44
2480	38.5	-4.15	1.35
2490	39.71	-4.01	1.48
2500	40.48	-3.93	1.4

Total

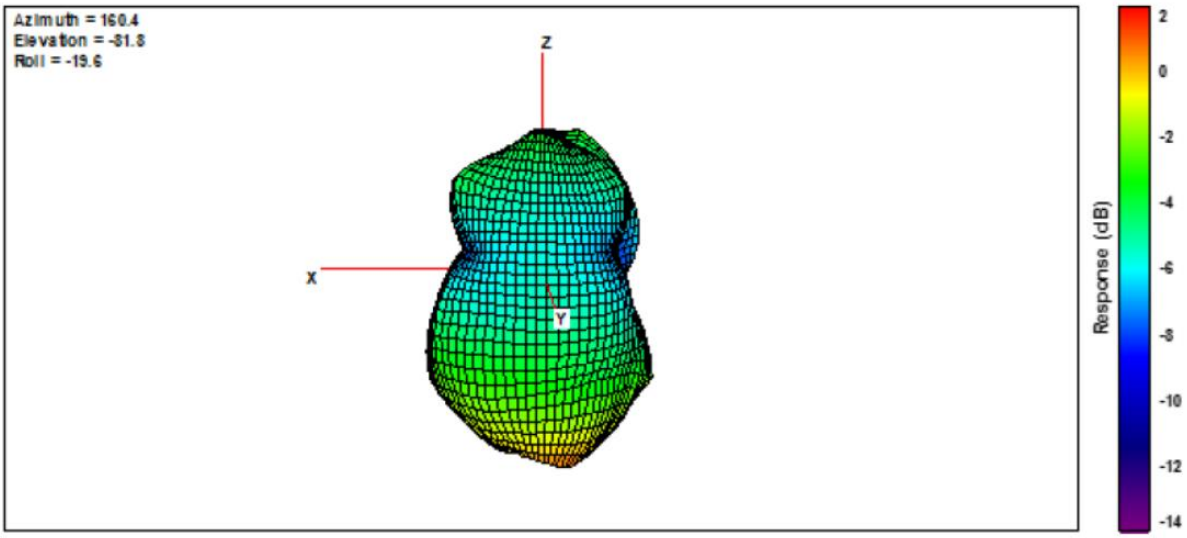

Total

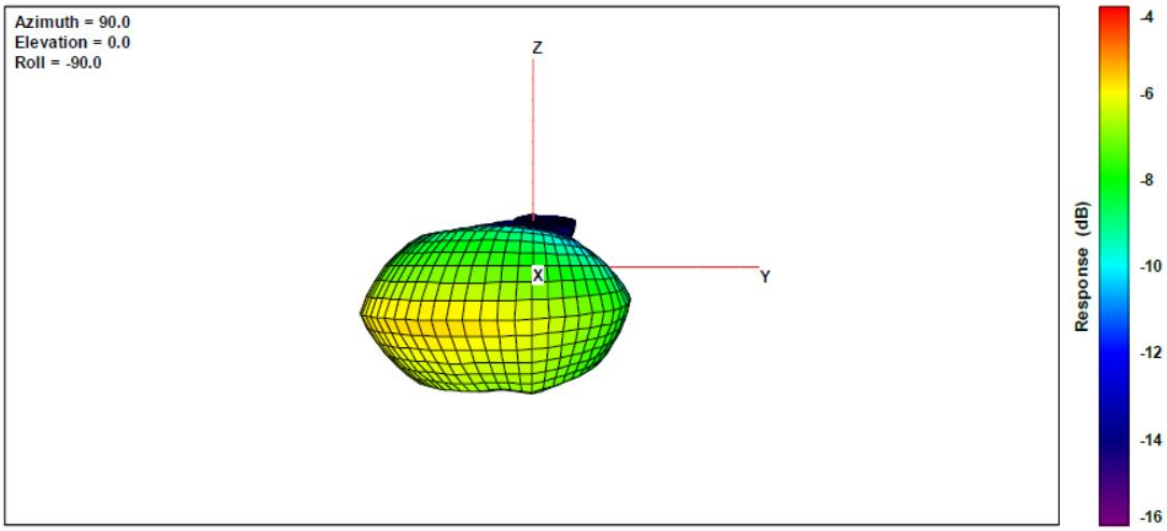

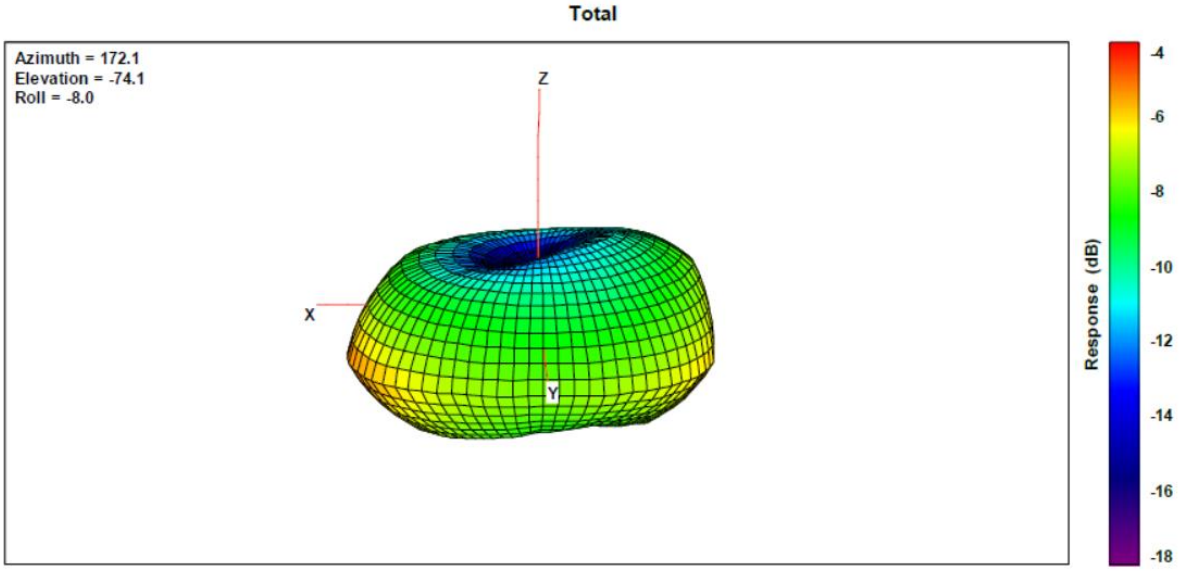
Total
Azimuth = 172.1
Elevation = -74.1
Roll = -8.0
Z
X
Y
Response (dB)
-4
-6
-8
-10
-12
-14
-16
-18