FCC Test Report

Report No: FCS202409246W01

Issued for

Applicant:	Shenzhen HongdeTechnology Co., Ltd.
Address:	808, No. 16, Sanhe Overseas Chinese District 2, Huarong Community, Dalang Street, Longhua District, Shenzhen
Product Name:	10 in 1 Wireless Charging Station
Brand Name:	N/A
Model Name:	M3
Series Model:	M3A, M3B, JC03, JC03A, JC03B
FCC ID:	2BLOC-M3
Issued By: Flux Compliance Service Laboratory Add: Room 105 Floor Bao hao Technology Building 1 NO.15 Gong ye West Road Hi-Tech Industrial, Song shan lake Dongguan Tel: 769-27280901 Fax:769-27280901 http://www.fcs-lab.com	

TEST RESULT CERTIFICATION

Applicant's Name..... :	Shenzhen HongdeTechnology Co., Ltd.
Address..... :	808, No. 16, Sanhe Overseas Chinese District 2, Huarong Community, Dalang Street, Longhua District, Shenzhen
Manufacture's Name..... :	Shenzhen HongdeTechnology Co., Ltd.
Address..... :	808, No. 16, Sanhe Overseas Chinese District 2, Huarong Community, Dalang Street, Longhua District, Shenzhen

Product Description

Product Name..... :	10 in 1 Wireless Charging Station
Brand Name .....:	N/A
Model Name..... :	M3
Series Model.....:	M3A, M3B, JC03, JC03A, JC03B
Test Standards..... :	FCC Rules and Regulations Part 15 Subpart C, Section 209
Test Procedure..... :	ANSI C63.10:2013

This device described above has been tested FCS, the test results show that the equipment under test (EUT) is in compliance with the FCC requirements. And it is applicable only to the tested sample identified in the report.
This report shall not be reproduced except in full, without the written approval of FCS, this document may be altered or revised by FCS, personal only, and shall be noted in the revision of the document..

Date of Test..... :

Date (s) of performance of tests. :	Sep. 18 2024 ~ Sep. 23 2024
Date of Issue.....:	Sep. 23 2024
Test Result.....:	Pass

Tested by : Scott Shen

(Scott Shen)

Reviewed by : Duke Qian

(Duke Qian)

Approved by : Jack Wang

(Jack Wang)

Table of Contents **Page**

1. SUMMARY OF TEST RESULTS 5
1.1 TEST FACTORY 6
1.2 MEASUREMENT UNCERTAINTY 6
2. GENERAL INFORMATION 7
2.1 GENERAL DESCRIPTION OF THE EUT 7
2.2 DESCRIPTION OF THE TEST MODES 9
2.3 DESCRIPTION OF NECESSARY ACCESSORIES AND SUPPORT UNITS 10
2.4 EQUIPMENTS LIST 11
3 CONDUCTED EMISSION MEASUREMENT 12
3.1 LIMIT 12
3.2 TEST PROCEDURE 12
3.3 TEST SETUP 13
3.4 TEST RESULTS 14
4. RADIATED EMISSION MEASUREMENT 16
4.1 LIMIT 16
4.2 TEST PROCEDURE 17
4.3 TEST SETUP 18
4.4 TEST RESULTS 19
(30MHZ-1000MHZ) 20
5. 20 DB BANDWIDTH TEST 22
5.1 LIMIT 22
5.2 TEST PROCEDURE 22
5.3 TEST SETUP 22
5.4 TEST RESULTS 23
6. ANTENNA REQUIREMENT 26
6.1 STANDARD REQUIREMENT 26
6.2 EUT ANTENNA 26

Revision History

Rev.	Issue Date	Effect Page	Contents
00	Sep. 23 2024	N/A	N/A

1. SUMMARY OF TEST RESULTS

FCC Rules and Regulations Part 15 Subpart C, Section 209			
Standard Section	Test Item	Judgment	Remark
15.207	Conducted Emission	PASS	--
15.209(a) (f)	Radiated Spurious Emission	PASS	--
15.215(c)	20dB Bandwidth	PASS	--
15.203	Antenna Requirement	PASS	--

NOTE:

(1)" N/A" denotes test is not applicable in this Test Report

(2) All tests are according to ANSI C63.10-2013

1.1 TEST FACTORY

Company Name:	Flux Compliance Service Laboratory
Address:	Room 105 Floor Bao hao Technology Building 1 NO.15 Gong ye West Road Hi-Tech Industrial, Song shan lake Dongguan
Telephone:	+86-769-27280901
Fax:	+86-769-27280901
Laboray Accreditations：	
FCC Test Firm Registration Number:	514908
CNAS Number:	L15566
Designation number:	CN0127
A2LA accreditation number:	5545.01
ISED Number:	25801
CAB ID：	CN0097

1.2 MEASUREMENT UNCERTAINTY

The reported uncertainty of measurement **y ±U**, where expended uncertainty **U** is based on a standard uncertainty multiplied by a coverage factor of **k=2**, providing a level of confidence of approximately **95** %.

No.	Item	Uncertainty
1	RF output power, conducted	±0.71dB
2	Unwanted Emissions, conducted	±2.98 dB
3	Conducted Emission (9KHz-150KHz)	±4.13 dB
4	Conducted Emission (150KHz-30MHz)	±4.74 dB
5	All emissions,radiated (9KHz -30MHz)	±3.1 dB
6	All emissions,radiated(<1G) 30MHz-1000MHz	±3.2 dB
7	All emissions,radiated (1GHz -18GHz)	±3.66 dB
8	All emissions,radiated (18GHz -40GHz)	±4.31 dB
9	Occupied bandwidth	±0.3 dB

2. GENERAL INFORMATION

2.1 GENERAL DESCRIPTION OF THE EUT

Product Name	10 in 1 Wireless Charging Station
Trade Name	N/A
Model Name	M3
Series Model	M3A, M3B, JC03, JC03A, JC03B
Model Difference	The above product with same circuit, PCB layout, electrical parts, materials and wiring structures, Appearance shape, the materials of decorative accessories is same, the only difference is the model name and colour.
Channel List	Please refer to the Note 2.
Operation frequency	115-205KHz
Modulation Type	MSK
Antenna Type	Inductive Loop Antenna with 1.0dBi
Power Supply	Input: AC 100V-240V 50-60 Hz USB-C1:(5V/3A 9V/3A 15V/3A 20V/3.25A) USB-C2:(5V/3A 9V/3A 15V/3A 20V/3.25A) USB-C3:(5V/3A 9V/2.2A 12V/2.5A) USB-C4:(5V/3A 9V/2.2A 12V/2.5A) USB-A1:(5V/4A) USB-A2:(5V/4A) USB-A3:(5V/4A) Cell phone wireless charging output: 5W, 7.5W, 10W, 15W Watch wireless charging output: 5W Headphone wireless charging output: 5W
Hardware version number	V1.0
Software version number	V1.0
Connecting I/O Port(s)	Please refer to the User's Manual

Note:

1. For a more detailed features description, please refer to the manufacturer’s specifications or the User's Manual.
2. Operation frequency:115KHz~205KHz

3. Table for Filed Antenna

Ant.	Brand	Model Name	Antenna Type	Connector	Gain (dBi)	NOTE
1	N/A	YT5CLB	Inductive Loop Antenna	N/A	1.0dBi	Phone Antenna
2	N/A	DE257CLB	Inductive Loop Antenna	N/A	1.0dBi	Watch Antenna
3	N/A	GTJCLB	Inductive Loop Antenna	N/A	1.0dBi	Headphone Antenna

2.2 DESCRIPTION OF THE TEST MODES

To investigate the maximum EMI emission characteristics generates from EUT, the test system was pre-scanning tested base on the consideration of following EUT operation mode or test configuration mode which possible have effect on EMI emission level. Each of these EUT operation mode(s) or test configuration mode(s) mentioned above was evaluated respectively.

Test software: Test manually using a fixed-frequency prototype

The fixed-frequency prototype is used to manually control the EUT to work in continuous TX mode, select the test channel, and the wireless mode is shown in the following table

Tested mode, Description	
Mode	Description
Mode 1	Watch(5W)
Mode 2	Wireless Earbuds(5W)
Mode 3	Phone(5W)
Mode 4	Phone(7.5W)
Mode 5	Phone(10W)
Mode 6	Phone(15W)
Mode 7	Watch(5W)+Wireless Earbuds(5W)+Phone(5W)
Mode 8	Watch(5W)+Wireless Earbuds(5W)+Phone(7.5W)
Mode 9	Watch(5W)+Wireless Earbuds(5W)+Phone(10W)
Mode 10	Watch(5W)+Wireless Earbuds(5W)+Phone(15W)
Mode 11	Watch(5W)+Phone(5W)
Mode 12	Watch(5W)+Phone(7.5W)
Mode 10	Watch(5W)+Phone(7.5W)
Mode 14	Watch(5W)+Phone(10W)
Mode 15	Watch(5W)+Phone(15W)
Mode 16	Wireless Earbuds(5W)+Phone(5W)
Mode 17	Wireless Earbuds(5W)+Phone(7.5W)
Mode 18	Wireless Earbuds(5W)+Phone(10W)
Mode 19	Wireless Earbuds(5W)+Phone(15W)
Mode 20	Watch(5W)+Wireless Earbuds(5W)

2.3 DESCRIPTION OF NECESSARY ACCESSORIES AND SUPPORT UNITS

The EUT has been tested as an independent unit together with other necessary accessories or support units. The following support units or accessories were used to form a representative test configuration during the tests.

Necessary accessories

Item	Equipment	Mfr/Brand	Model/Type No.	Serial No.	Note
1	Phone	Xiaomi	Xiaomi13	N/A	This is for testing only in report.
2	Wireless Earbuds	HW	freebud5i	N/A	This is for testing only in report.
3	Watch	HW	Gt3 Pro	N/A	This is for testing only in report.

Support units

Item	Equipment	Mfr/Brand	Model/Type No.	Serial No.	Note
N/A	N/A	N/A	N/A	N/A	N/A

Note:

(1) The support equipment was authorized by Declaration of Confirmation.

(2) For detachable type I/O cable should be specified the length in cm in 『Length』 column.

(3) “YES” is means “shielded” “with core”; “NO” is means “unshielded” “without core”.

2.4 EQUIPMENTS LIST

Radiation Test equipment

Kind of Equipment	Manufacturer	Type No.	Company No.	Last calibration	Calibrated until
EMI Test Receiver	R&S	ESRP 3	FCS-E001	2024.08.28	2025.08.27
Signal Analyzer	R&S	FSV40-N	FCS-E012	2024.08.28	2025.08.27
Active loop Antenna	ZHINAN	ZN30900C	FCS-E013	2024.08.28	2025.08.27
Bilog Antenna	SCHWARZBECK	VULB 9168	FCS-E002	2024.08.28	2025.08.27
Horn Antenna	SCHWARZBECK	BBHA 9120D	FCS-E003	2024.08.28	2025.08.27
SHF-EHF Horn Antenna (18G-40GHz)	A-INFO	LB-180400-KF	FCS-E018	2024.08.28	2025.08.27
Pre-Amplifier(0.1M-3G Hz)	EMCI	EM330N	FCS-E004	2024.08.28	2025.08.27
Pre-Amplifier (1G-18GHz)	N/A	TSAMP-0518SE	FCS-E014	2024.08.28	2025.08.27
Pre-Amplifier (18G-40GHz)	TERA-MW	TRLA-0400	FCS-E019	2024.08.28	2025.08.27
Temperature & Humidity	HTC-1	victor	FCS-E005	2024.08.28	2025.08.27

Conduction Test equipment

Kind of Equipment	Manufacturer	Type No.	Company No.	Last calibration	Calibrated until
EMI Test Receiver	R&S	ESPI	FCS-E020	2024.08.28	2025.08.27
LISN	R&S	ENV216	FCS-E007	2024.08.28	2025.08.27
LISN	ETS	3810/2NM	FCS-E009	2024.08.28	2025.08.27
Temperature & Humidity	HTC-1	victor	FCS-E008	2024.08.28	2025.08.27

RF Connected Test

Kind of Equipment	Manufacturer	Type No.	Company No.	Last calibration	Calibrated until
Spectrum Analyzer	Keysight	N9020A	FCS-E015	2024.08.28	2025.08.27
Spectrum Analyzer	Agilent	E4447A	MY50180039	2024.08.28	2025.08.27
Spectrum Analyzer	R&S	FSV-40	101499	2024.08.28	2025.08.27

3 CONDUCTED EMISSION MEASUREMENT

3.1 LIMIT

Operating frequency band. In case the emission fall within the restricted band specified on Part 207(a) limit in the table below has to be followed.

FREQUENCY (MHz)	Conducted Emissionlimit (dBuV)	
	Quasi-peak	Average
0.15 -0.5	66 - 56 *	56 - 46 *
0.50 -5.0	56.00	46.00
5.0 -30.0	60.00	50.00

Note:
(1) The tighter limit applies at the band edges.
(2) The limit of " * " marked band means the limitation decreases linearly with the logarithm of the frequency in the range.

3.2 TEST PROCEDURE

The following table is the setting of the receiver

Receiver Parameters	Setting
Attenuation	10 dB
Start Frequency	0.15 MHz
Stop Frequency	30 MHz
IF Bandwidth	9 kHz

a. The EUT was 0.8 meters from the horizontal ground plane and 0.4 meters from the vertical ground plane with EUT being connected to the power mains through a line impedance stabilization network (LISN). All other support equipments powered from additional LISN(s). The LISN provide 50 Ohm/ 50uH of coupling impedance for the measuring instrument.
b. Interconnecting cables that hang closer than 40 cm to the ground plane shall be folded back and forth in the center forming a bundle 30 to 40 cm long.
c. I/O cables that are not connected to a peripheral shall be bundled in the center. The end of the cable may be terminated, if required, using the correct terminating impedance. The overall length shall not exceed 1 m.
d. LISN at least 80 cm from nearest part of EUT chassis.
e. For the actual test configuration, please refer to the related Item –EUT Test Photos.

3.3 TEST SETUP

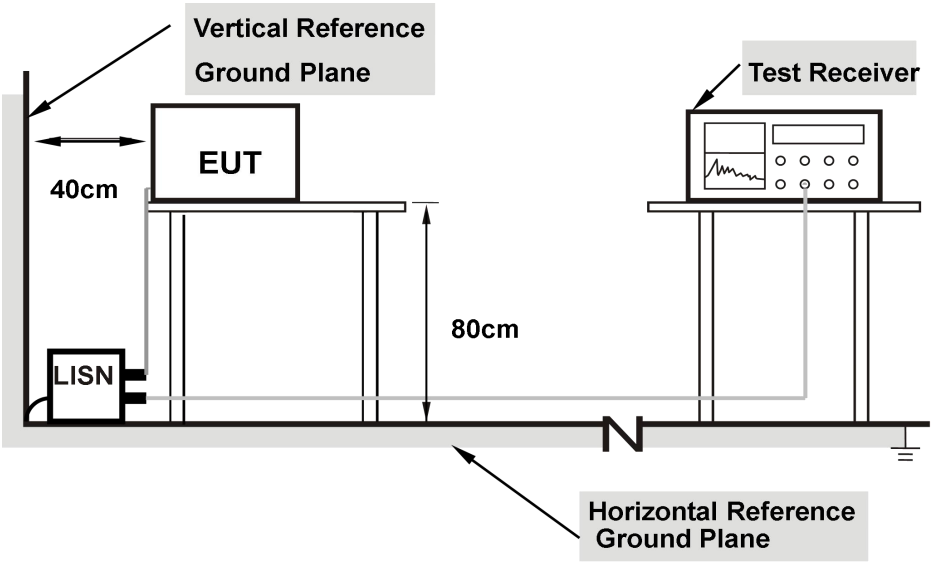

Note: 1.Support units were connected to second LISN.

2.Both of LISNs (AMN) are 80 cm from EUT and at least 80 from other units and other metal planes

3.4 TEST RESULTS

Temperature:	25℃	Relative Humidity:	50%
Test Mode:	Mode 10(Worst)	Test Voltage:	AC 120V/60Hz
Result:	Pass		

L-line

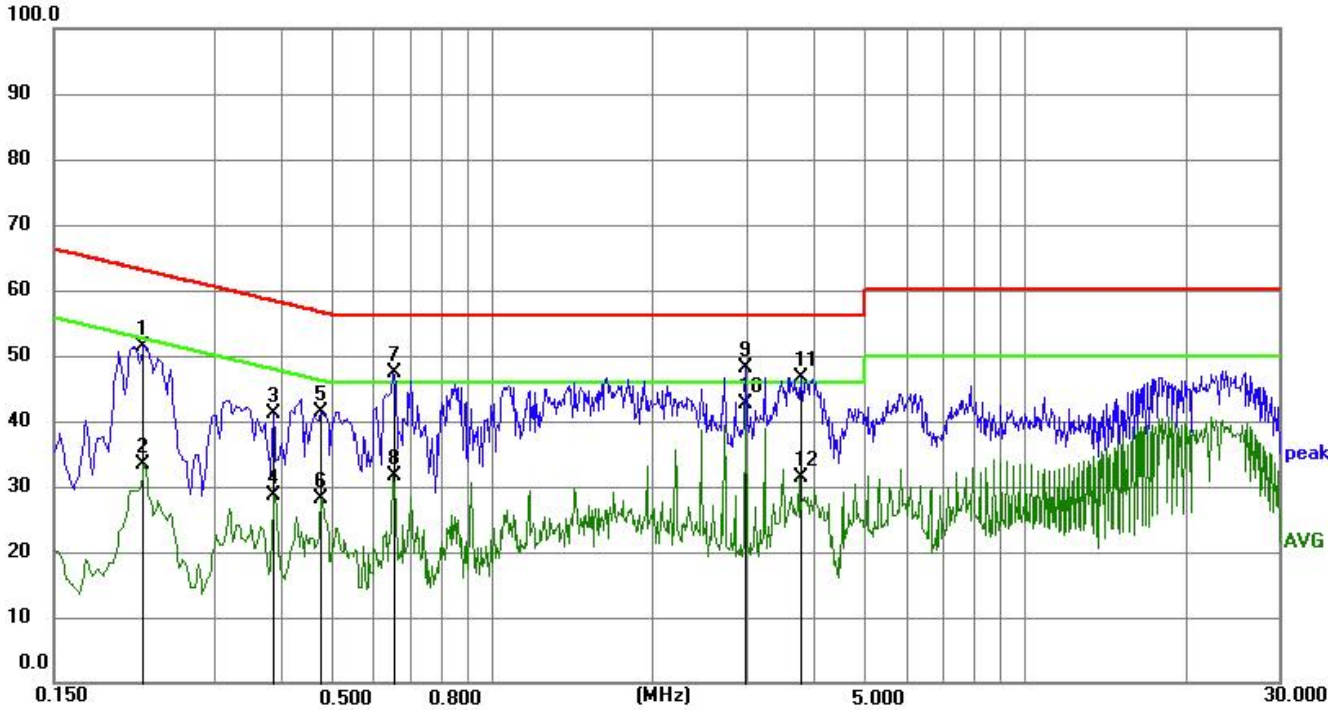

No.	Frequency (MHz)	Reading (dBuV)	Correct Factor(dB)	Result (dBuV)	Limit (dBuV)	Margin (dB)	Remark
1	0.2220	41.35	10.07	51.42	62.74	11.32	QP
2	0.2220	23.34	10.07	33.41	52.74	19.33	AVG
3	0.3885	31.20	10.02	41.22	58.10	16.88	QP
4	0.3885	18.53	10.02	28.55	48.10	19.55	AVG
5	0.4785	31.39	10.02	41.41	56.37	14.96	QP
6	0.4785	18.09	10.02	28.11	46.37	18.26	AVG
7	0.6540	37.32	9.99	47.31	56.00	8.69	QP
8	0.6540	21.70	9.99	31.69	46.00	14.31	AVG
9	2.9940	38.28	9.94	48.22	56.00	7.78	QP
10	2.9940	32.61	9.94	42.55	46.00	3.45	AVG
11	3.8130	36.75	9.92	46.67	56.00	9.33	QP
12	3.8130	21.58	9.92	31.50	46.00	14.50	AVG

N-line

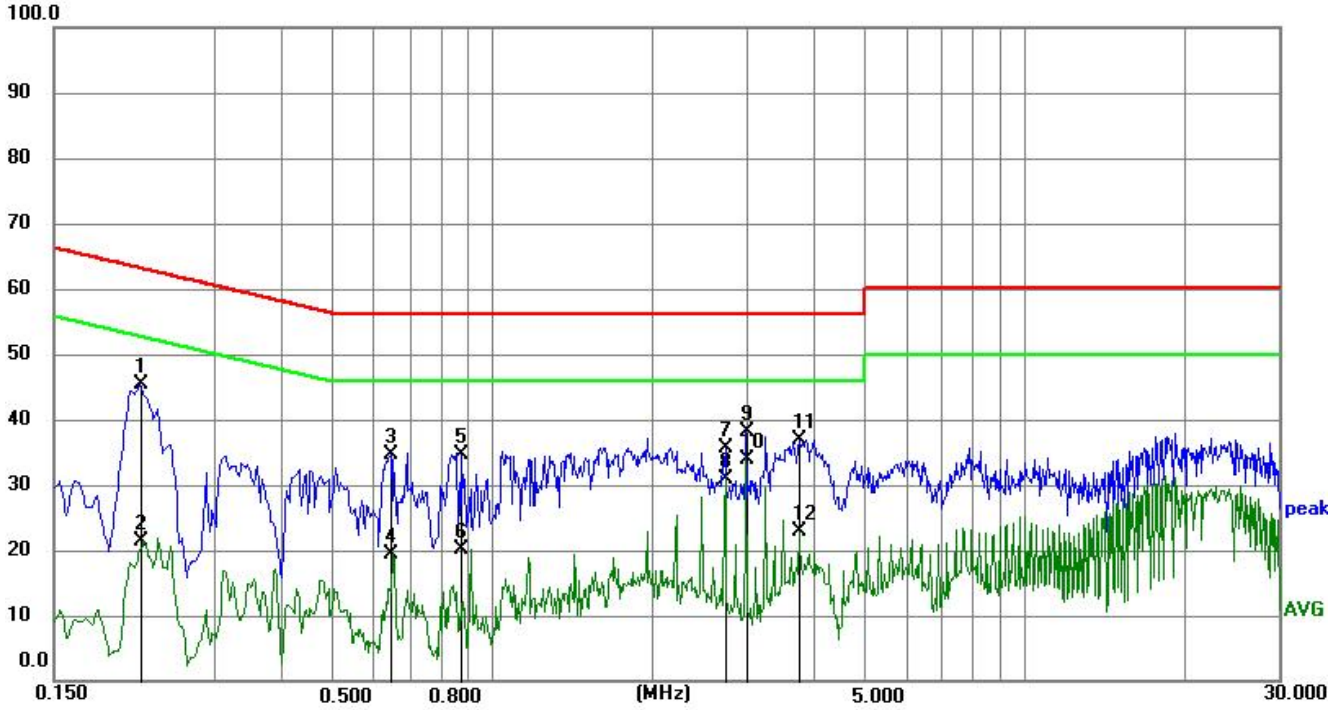

No.	Frequency (MHz)	Reading (dBuV)	Correct Factor(dB)	Result (dBuV)	Limit (dBuV)	Margin (dB)	Remark
1	0.2175	35.24	10.05	45.29	62.91	17.62	QP
2	0.2175	11.22	10.05	21.27	52.91	31.64	AVG
3	0.6449	24.73	9.99	34.72	56.00	21.28	QP
4	0.6449	9.43	9.99	19.42	46.00	26.58	AVG
5	0.8744	24.71	9.99	34.70	56.00	21.30	QP
6	0.8744	10.26	9.99	20.25	46.00	25.75	AVG
7	2.7375	25.74	9.95	35.69	56.00	20.31	QP
8	2.7375	20.89	9.95	30.84	46.00	15.16	AVG
9	2.9985	28.16	9.94	38.10	56.00	17.90	QP
10	2.9985	24.02	9.94	33.96	46.00	12.04	AVG
11	3.7770	26.94	9.92	36.86	56.00	19.14	QP
12	3.7770	12.91	9.92	22.83	46.00	23.17	AVG

4. RADIATED EMISSION MEASUREMENT

4.1 LIMIT

In any 100 kHz bandwidth outside the operating frequency band. In case the emission fall within the Restricted band specified on Part15.205(a)&209(a) limit in the table and according to ANSI C63.10-2013 below has to be followed

LIMITS OF RADIATED EMISSION MEASUREMENT (0.009mhz - 1000mhz)

Frequencies (MHz)	Field Strength (micorvolts/meter)	Measurement Distance (meters)
0.009~0.490	2400/F(KHz)	300
0.490~1.705	24000/F(KHz)	30
1.705~30.0	30	30
30~88	100	3
88~216	150	3
216~960	200	3
Above 960	500	3

Notes:

(1) The limit for radiated test was performed according to FCC PART 15C.
(2) The tighter limit applies at the band edges.
(3) Emission level (dBuV/m)=20log Emission level (uV/m).
(4) Distance refers to the distance in meters between the measuring instrument antenna and the EUT
(5) The emission limits shown in the above table are based on measurements employing a CISPR quasi-peak detector except for the frequency bands 9-90 kHz, 110-490 kHz. Radiated emission limits inthese three bands are based on measurements employing an average detector.

4.2 TEST PROCEDURE

Spectrum Parameter	Setting
Attenuation	Auto
Detector	Peak/AV
Start Frequency	1000 MHz(Peak/AV)
Stop Frequency	10th carrier hamonic(Peak/AV)
RB / VB (emission in restricted band)	PK=1MHz / 1MHz, AV=1 MHz /10 Hz

a. The measuring distance of at 3 m shall be used for measurements at frequency 0.009MHz up to 1GHz,and above 1GHz.
b. The EUT was placed on the top of a rotating table 0.8 meters (above 1GHz is 1.5 m) above the ground at a 3 meter anechoic chamber test site. The table was rotated 360 degrees to determine the position of the highest radiation.
c. The height of the equipment shall be 0.8 m(above 1GHz is 1.5 m); the height of the test antenna shall vary between 1 m to 4 m. horizontal and vertical polarizations of the antenna are set to make the measurement.
d. The initial step in collecting conducted emission data is a spectrum analyzer peak detector mode pre-scanning the measurement frequency range. Significant peaks are then marked and then QuasiPeak detector mode re-measured.
e. If the Peak Mode measured value compliance with and lower than Quasi Peak Mode Limit, the EUT shall be deemed to meet QP Limits and then no additional QP Mode measurement performed.
f. For the actual test configuration, please refer to the related Item –EUT Test Photos.

Note:
Both horizontal and vertical antenna polarities were tested. The worst case emissions were reported

4.3 TEST SETUP

（A）Radiated Emission Test-Up Frequency Below 30MHz

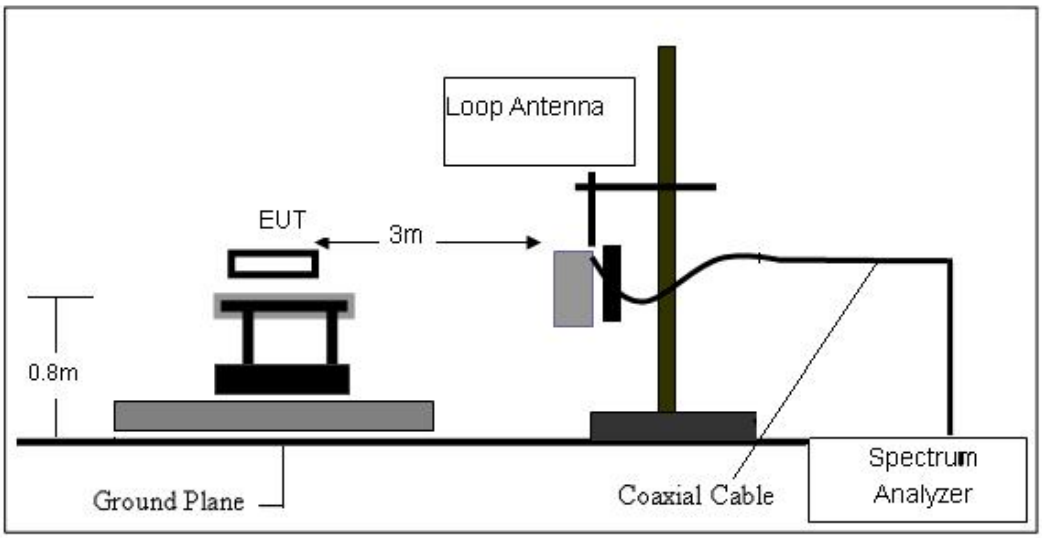

（B）Radiated Emission Test-Up Frequency 30MHz~1GHz

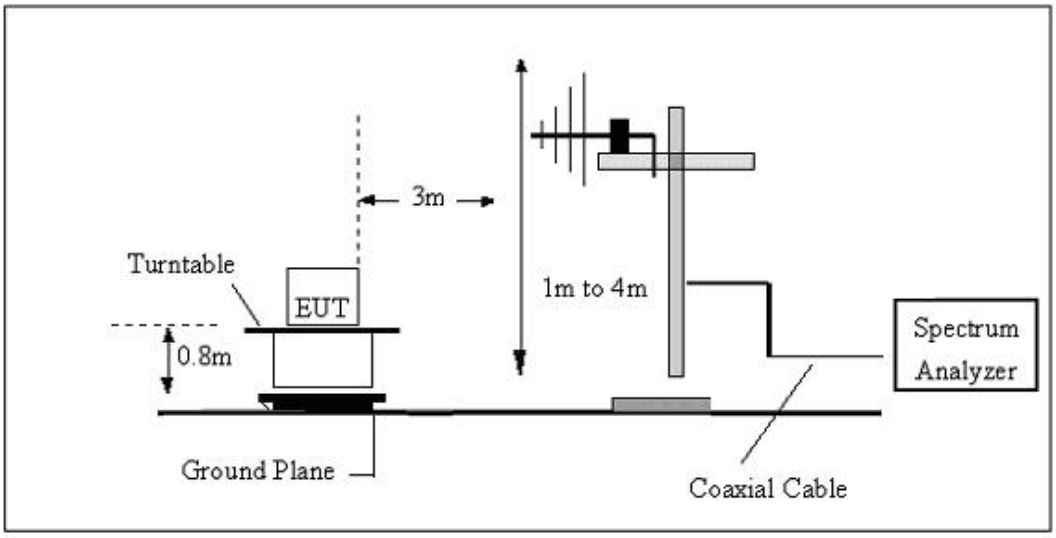

（C）Radiated Emission Test-Up Frequency Above 1GHz

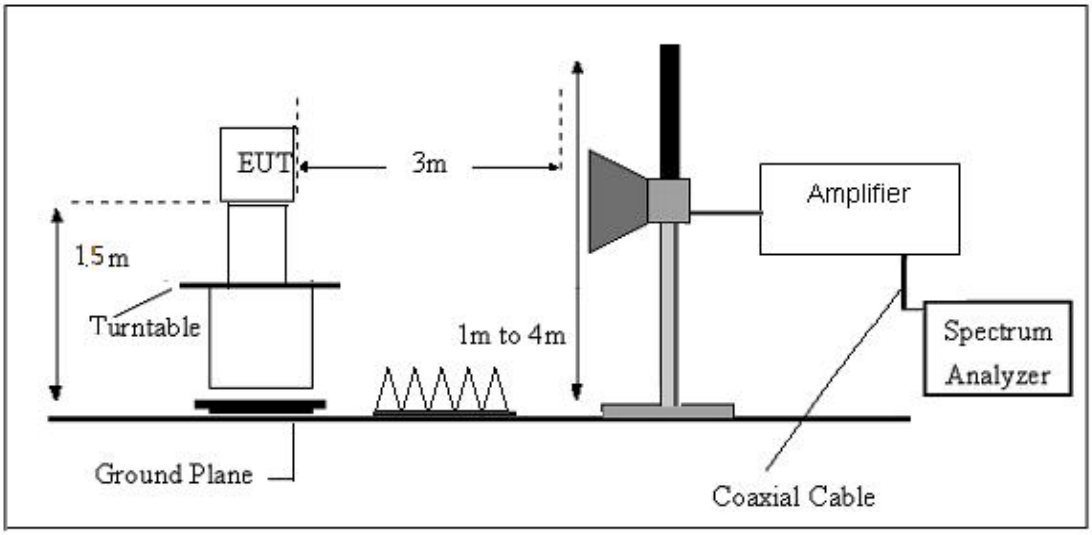

4.4 TEST RESULTS

For spurious emission

(9KHz-30MHz)

Temperature:	23.7℃	Relative Humidity:	61%
Test Voltage:	AC 120V/60Hz	Phase:	Vertical
Test Mode:	Mode 10(Worst)		

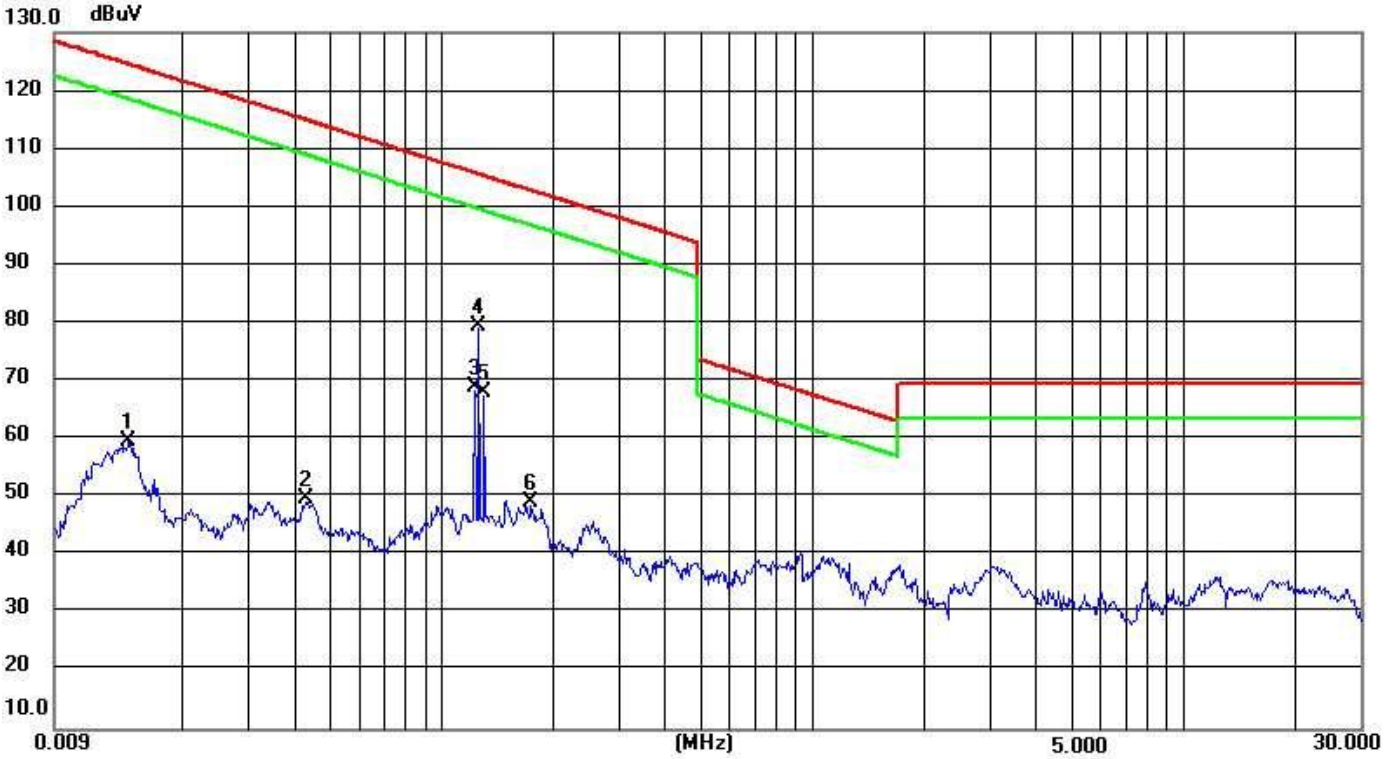

No.	Frequency (MHz)	Reading (dBuV)	Factor (dB)	Level (dBuV)	Limit (dBuV)	Margin (dB)	Detector
1	0.0142	49.56	10.12	59.68	124.56	-64.88	AV
2	0.0430	39.43	10.22	49.65	114.95	-65.30	AV
3	0.1227	58.53	10.30	68.83	105.84	-37.01	AV
4	0.1281	69.13	10.39	79.52	105.63	-26.11	AV
5 *	0.1290	57.57	10.45	68.02	105.35	-37.33	AV
6	0.1737	36.15	12.86	49.01	102.82	-53.81	AV

Remarks:

1. Final Level =Receiver Read level + Factor

2.The emission limits shown in the above table are based on measurements employing a CISPR quasi-peak detector except for the frequency bands 9-90 kHz, 110-490 kHz. Radiated emission limits inthese three bands are based on measurements employing an average detector

(30MHZ-1000MHZ)

Temperature:	23.7℃	Relative Humidity:	61%
Test Voltage:	AC 120V/60Hz	Phase:	Horizontal
Test Mode:	Mode 10(Worst)		

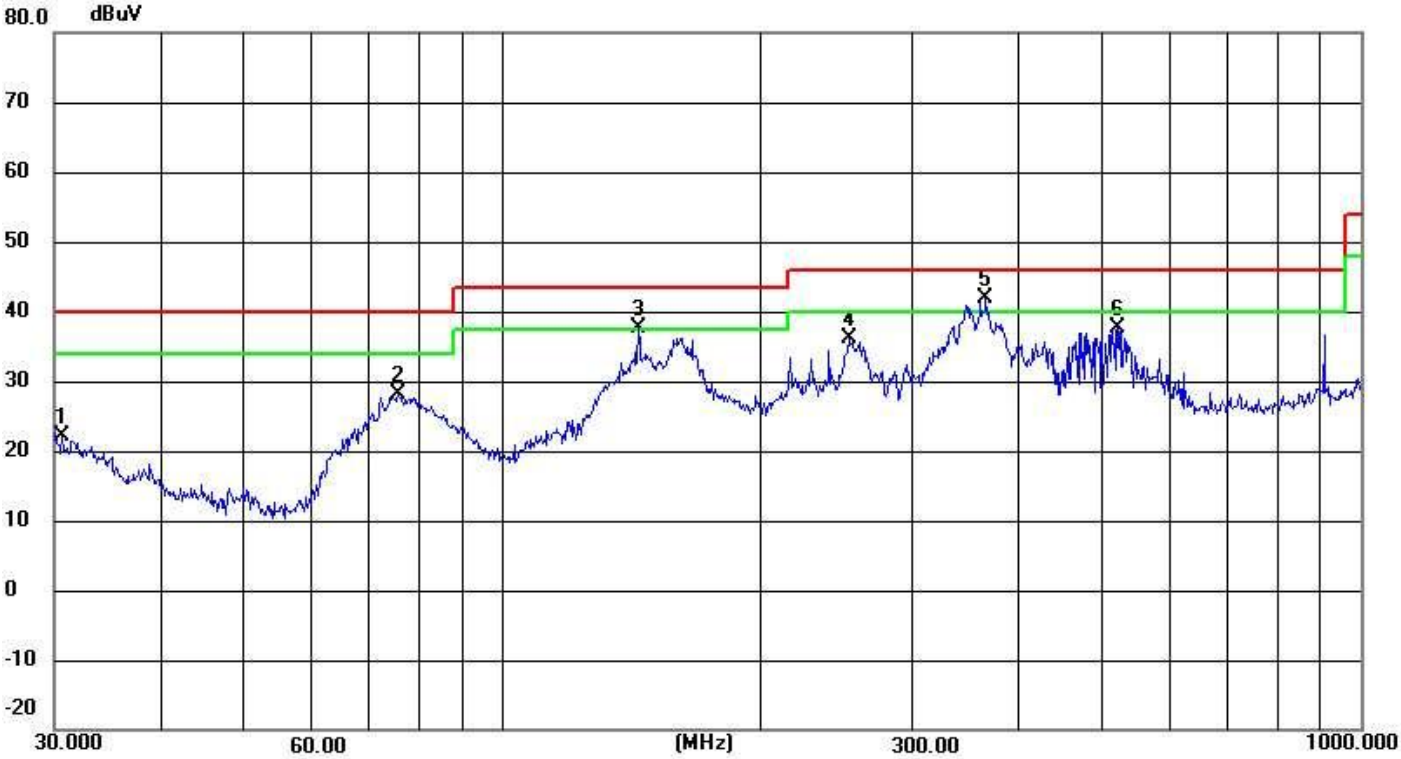

No.	Frequency (MHz)	Reading (dBuV)	Correction (dB/m)	Result (dBuV/m)	Limit (dBuV/m)	Margin (dB)	Remark
1	30.6379	29.78	-7.58	22.20	40.00	-17.80	QP
2	75.4464	60.22	-32.15	28.07	40.00	-11.93	QP
3	143.8295	69.81	-32.13	37.68	43.50	-5.82	QP
4	252.9482	68.02	-31.97	36.05	46.00	-9.95	QP
5	365.5391	73.54	-31.70	41.84	46.00	-4.16	QP
6	520.8882	69.00	-31.27	37.73	46.00	-8.27	QP

Remarks:
1. Final Level =Receiver Read level + Factor

Temperature:	22.7℃	Relative Humidity:	61%
Test Voltage:	AC 120V/60Hz	Phase:	Vertical
Test Mode:	Mode 10(Worst)		

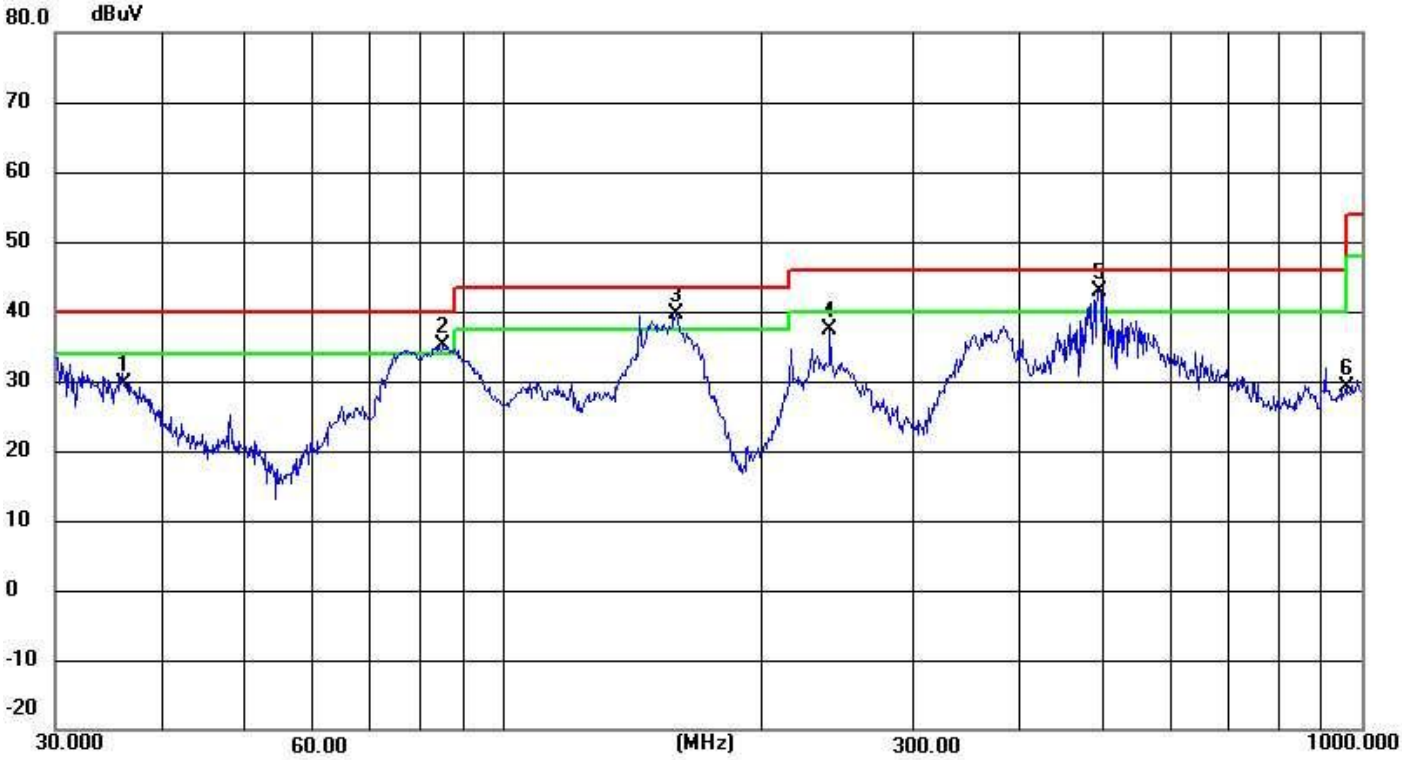

No.	Frequency (MHz)	Reading (dBuV)	Correction (dB/m)	Result (dBuV/m)	Limit (dBuV/m)	Margin (dB)	Remark
1	36.0007	40.66	-11.11	29.55	40.00	-10.45	QP
2	84.9993	67.40	-32.17	35.23	40.00	-4.77	QP
3	158.6677	71.72	-32.11	39.61	43.50	-3.89	QP
4	239.9873	69.29	-31.99	37.30	46.00	-8.70	QP
5	494.1984	74.24	-31.32	42.92	46.00	-3.08	QP
6	958.7943	59.87	-30.64	29.23	46.00	-16.77	QP

Remarks:
1. Final Level =Receiver Read level + Factor

5. 20 DB BANDWIDTH TEST

5.1 LIMIT

According to 15.215 (c) Intentional radiators operating under the alternative provisions to the general emission limits, as contained in § 15.217 through 15.257 and in Subpart E of this part, must be designed to ensure that the 20 dB bandwidth of the emission, or whatever bandwidth may otherwise be specified in the specific rule section under which the equipment operates, is contained within the frequency band designated in the rule section under which the equipment is operated. The requirement to contain the designated bandwidth of the emission within the specified frequency band includes the effects from frequency sweeping, frequency hopping and other modulation techniques that may be employed as well as the frequency stability of the transmitter over expected variations in temperature and supply voltage. If a frequency stability is not specified in the regulations, it is recommended that the fundamental emission be kept within at least the central 80% of the permitted band in order to minimize the possibility of out-of-band operation

5.2 TEST PROCEDURE

a. Check the calibration of the measuring instrument using either an internal calibrator or a known signal from an external generator

b. Position the EUT without connection to measurement instrument. Turn on the EUT and connect it to measurement instrument. Then set it to any one convenient frequency within its operating range. Set a reference level on the measuring instrument equal to the highest peak value.

c. Measure the frequency difference of two frequencies that were attenuated 20 dB from the reference level. Record the frequency difference as the emission bandwidth.

5.3 TEST SETUP

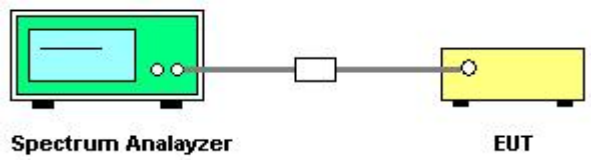

5.4 TEST RESULTS

Temperature:	25℃	Relative Humidity:	50%
Test Mode:	Mode 10(Worst)	Test Voltage:	AC 120V/60Hz

Frequency (KHz)	20dB Bandwidth (Hz)	Result
128.1	588	PASS

Headset Coil

Frequency (KHz)	20dB Bandwidth (Hz)	Result
128.1	490	PASS

Phone Coil

Frequency (KHz)	20dB Bandwidth (Hz)	Result
128.1	509	PASS

Watch Coil

6. ANTENNA REQUIREMENT

6.1 STANDARD REQUIREMENT

15.203 requirement: For intentional device, according to 15.203: an intentional radiator shall be designed to ensure that no antenna other than that furnished by the responsible party shall be used with the device.

6.2 EUT ANTENNA

The antennas used for this product is Inductive Loop Antenna and no other than that furnished by the responsible party shall be used with the device, the maximum peak gain of the transmit antenna is 1.0dBi.

※※※※※END OF THE REPORT※※※※※