Antenna specification sheet

NO.	（Contents）	（Number of Page）	（Page Code）
1	Spec Cover	1	1
2	Spec Item	1	2
3	Drawing	1	3
4	Test Reports	1	4
5	Parameter	1	5
6	Gain Test	1	6
7			
8			
9			
10	-	-	-
11	-	-	-
12	-	-	-

Tel:15818375487

Manufacturer: Dongguan Chuangjie Electronics Co., Ltd
Address: No. 6 Qilin East Road, Daning, Humen Town, Dongguan City

Test Reports

Electrical Properties	
Frequency	2.4~2.5GHz;4.9~5.9GHz
Impedance	50 0hm Nominal
V.S.W.R	1.92 : 1 Max
Return Loss	-10 dB Max
Radiation	Omni-directional
Gain (Peak)	5dBi
Cable Loss	3.2 dB / m Max @ 2450 MHz
Polarization	Linear, Vertical
Admitted Power	1 W
Connector	ipex
Physical Properties	
Antenna Material	FPCB
Cable Type	O.D. 1.13mm // 120 mm
Operating Temp.	-10 ~ +60 ˚C
Storage Temp.	-10 ~ +70 ˚C
Cable Color	Black

SIGN	DATE	DESCRIPTION	APPROVER
B			
C			
D			

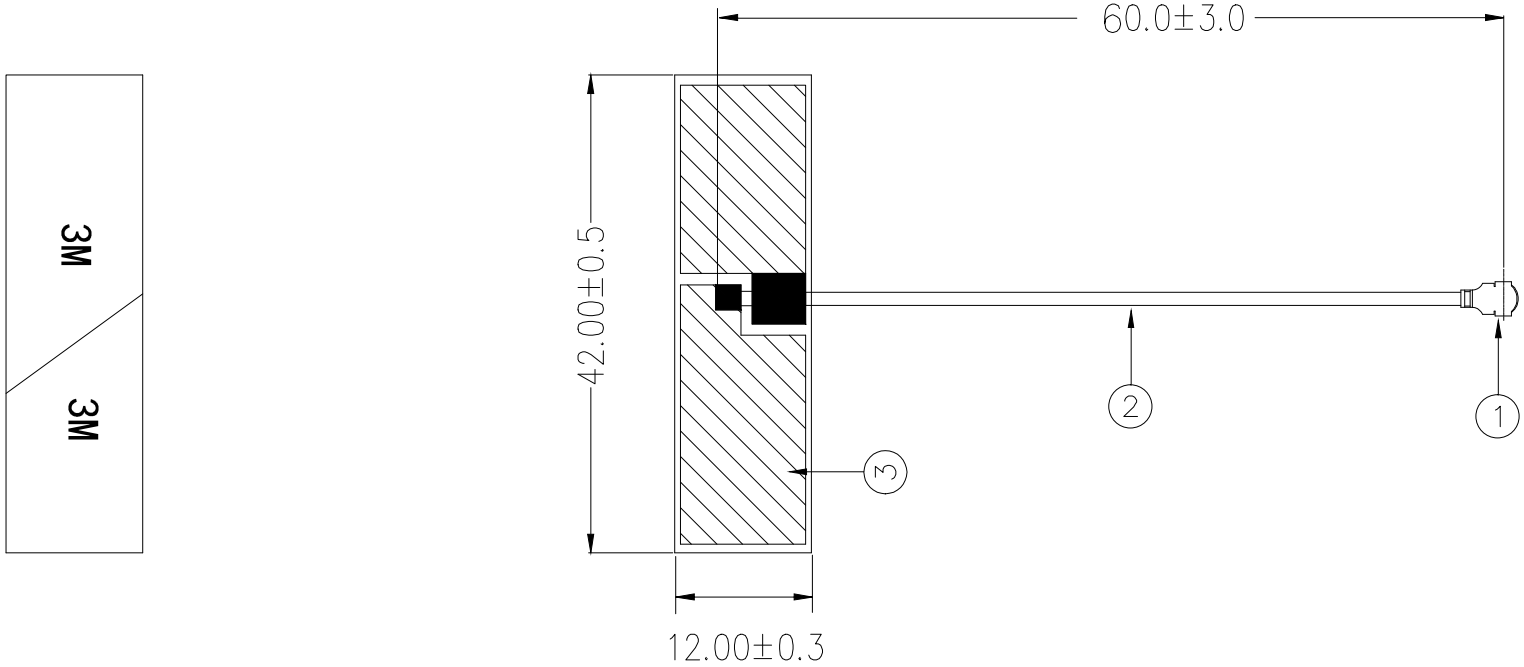

No.	Part Number	Name	Material	Q'ty
3	NB030B	FPCB	42*12mm	1
2	R-CB-081B	Coaxial Cable	O.D. 0.81mm Black	1
1	CI-081	Connector	Mini Connector	1

东莞市创捷电子有限公司

Tel:86-0769-33691210
Fax:86-0769-82381572

TITLE: 2.4GHz Antenna

PART NO.: WF4212-IPEX 1-6cm

DWG NAME: NB030-081B-IX130.DWG

APPROVED BY	CHECKED BY	DESIDNED BY		Tolerance
jeff 2014-02-26	leon 2014-02-26	YD 2014-02-26	UNITS: mm SCALE: 1/1 REVISION: A	X.X Ñ0.20 X.XX Ñ0.10 XÁ ÑÁ

S Parameter Test

Agilent E5071C

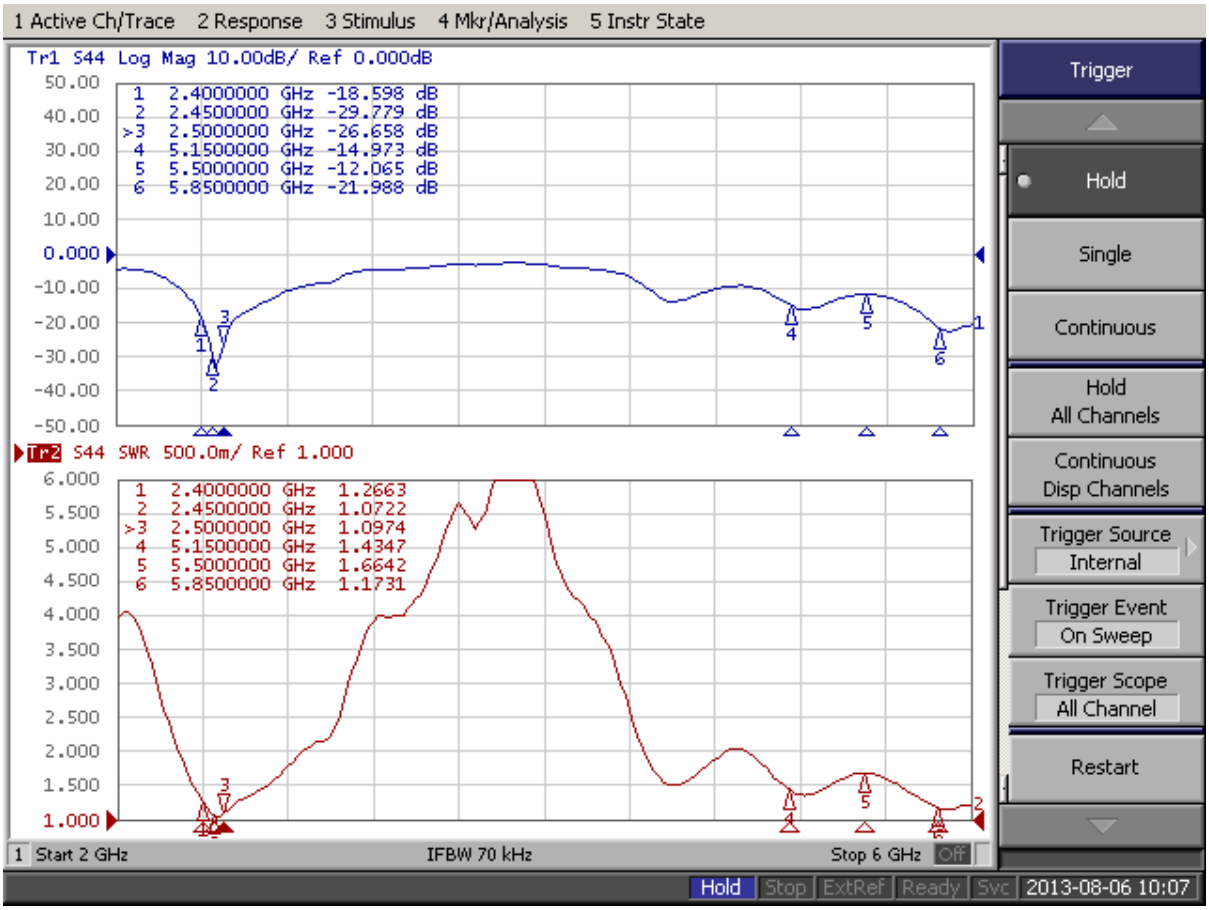

Frequency / MHz	Gain/ dBi	Efficiency / %
2400	4.96	53.87
2450	5.00	55.27
2500	4.59	54.74
5150	5.00	54.89
5500	4.51	44.02
5850	4.88	44.12