# FCC Test Report

Report No: FCS202408312W02

Issued for

| | |
|---|---|
| Applicant: | Shenzhen Yuecan Electronic Co., Ltd |
| Address: | 508,building A,no.369 BULONG Road,Ma'antang Community, Bantian Street, Longgang District, Shenzhen |
| Product Name: | Android Car Radio |
| Brand Name: | ZZH |
| Model Name: | YC665 |
| Series Model: | ZH011,ZH012, ZH016,ZH017,ZH025,ZH026,YC765,YC863, YC865,YC866 |
| FCC ID: | 2BLSN-YC665 |

Issued By: Flux Compliance Service Laboratory
Add: Room 105 Floor Bao hao Technology Building 1 NO.15 Gong ye West Road Hi-Tech Industrial, Song shan lake Dongguan
Tel: 769-27280901 Fax:769-27280901 http://www.fcs-lab.com

# TEST RESULT CERTIFICATION

| | |
|---|---|
| Applicant's Name..... : | Shenzhen Yuecan Electronic Co., Ltd |
| Address..... : | 508,building A,no.369 BULONG Road,Ma'antang Community, Bantian Street, Longgang District, Shenzhen |
| Manufacture's Name..... : | Shenzhen Yuecan Electronic Co., Ltd |
| Address..... : | 508,building A,no.369 BULONG Road,Ma'antang Community, Bantian Street, Longgang District, Shenzhen |

**Product Description**

| | |
|---|---|
| Product Name..... : | Android Car Radio |
| Brand Name .....: | ZZH |
| Model Name..... : | YC665 |
| Series Model.....: | ZH011,ZH012, ZH016,ZH017,ZH025,ZH026,YC765,YC863, YC865,YC866 |
| Test Standards..... : | FCC Rules and Regulations Part 15 Subpart C, Section 249 |
| Test Procedure..... : | ANSI C63.10:2013 |

This device described above has been tested FCS, the test results show that the equipment under test (EUT) is in compliance with the FCC requirements. And it is applicable only to the tested sample identified in the report.
This report shall not be reproduced except in full, without the written approval of FCS, this document may be altered or revised by FCS, personal only, and shall be noted in the revision of the document..

**Date of Test**..... :

| | |
|---|---|
| Date (s) of performance of tests. : | Aug 22, 2024 ~ Aug 29, 2024 |
| Date of Issue.....: | Aug 29, 2024 |
| Test Result.....: | Pass |

Tested by : Scott Shen

(Scott Shen)

Reviewed by : Duke Qian

(Duke Qian)

Approved by : Jack Wang

(Jack Wang)

Table of Contents Page

**1. SUMMARY OF TEST RESULTS ..... 5**
1.1 TEST FACTORY ..... 6
1.2 MEASUREMENT UNCERTAINTY ..... 6
**2. GENERAL INFORMATION ..... 7**
2.1 GENERAL DESCRIPTION OF THE EUT ..... 7
2.2 DESCRIPTION OF THE TEST MODES ..... 9
2.3 DESCRIPTION OF NECESSARY ACCESSORIES AND SUPPORT UNITS ..... 10
2.4 EQUIPMENTS LIST ..... 11
**3. RADIATED EMISSION MEASUREMENT ..... 13**
3.1 LIMIT ..... 13
3.2 TEST PROCEDURE ..... 14
3.3 TEST SETUP ..... 15
3.4 TEST RESULTS ..... 16
**4. BAND EDGE TEST ..... 22**
4.1 LIMIT ..... 22
4.2 TEST PROCEDURE ..... 22
4.3 TEST SETUP ..... 23
4.4 TEST RESULTS ..... 24
**5. 20 DB BANDWIDTH TEST ..... 25**
5.1 LIMIT ..... 25
5.2 TEST PROCEDURE ..... 25
5.3 TEST SETUP ..... 25
5.4 TEST RESULTS ..... 26
**6 CONDUCTED EMISSION MEASUREMENT ..... 28**
6.1 LIMIT ..... 28
6.2 TEST PROCEDURE ..... 28
6.3 TEST SETUP ..... 29
6.4 TEST RESULTS ..... 30
**7. ANTENNA REQUIREMENT ..... 32**
7.1 STANDARD REQUIREMENT ..... 32
7.2 EUT ANTENNA ..... 32

## Revision History

| Rev. | Issue Date | Effect Page | Contents |
|---|---|---|---|
| 00 | Aug 29, 2024 | All | Initial Issue |
| | | | |

# 1. SUMMARY OF TEST RESULTS

| FCC Part 15.249,Subpart C | | | |
|---|---|---|---|
| Standard Section | Test Item | Judgment | Remark |
| 15.207 | Conducted Emission | N/A | -- |
| 15.205(a), 15.209(a), 15.249(a), 15.249(c) | Radiated Spurious Emission | PASS | -- |
| 15.209 | Field strength of fundamental | PASS | |
| 15.249(d) | Band Edge Emission | PASS | -- |
| 15.215(c) | 20dB Bandwidth | PASS | -- |
| 15.203 | Antenna Requirement | PASS | -- |

NOTE:

(1)" N/A" denotes test is not applicable in this Test Report

(2) All tests are according to ANSI C63.10-2013

## 1.1 TEST FACTORY

| | |
|---|---|
| Company Name: | Flux Compliance Service Laboratory |
| Address: | Room 105 Floor Bao hao Technology Building 1 NO.15 Gong ye West Road Hi-Tech Industrial, Song shan lake Dongguan |
| Telephone: | +86-769-27280901 |
| Fax: | +86-769-27280901 |
| FCC Test Firm Registration Number: 514908<br>Designation number: CN0127<br>A2LA accreditation number：5545.01 | |

## 1.2 MEASUREMENT UNCERTAINTY

The reported uncertainty of measurement **y ±U**, where expended uncertainty **U** is based on a standard uncertainty multiplied by a coverage factor of **k=2**, providing a level of confidence of approximately **95** %.

| No. | Item | Uncertainty |
|---|---|---|
| 1 | RF output power, conducted | ±0.71dB |
| 2 | Unwanted Emissions, conducted | ±2.98 dB |
| 3 | Conducted Emission (9KHz-150KHz) | ±4.13 dB |
| 4 | Conducted Emission (150KHz-30MHz) | ±4.74 dB |
| 5 | All emissions,radiated(<1G) 9KHz-30MHz | ±3.1 dB |
| 6 | All emissions,radiated(<1G) 30MHz-1000MHz | ±3.2 dB |
| 7 | All emissions,radiated (1GHz -18GHz) | ±3.66 dB |
| 8 | All emissions,radiated (18GHz -40GHz) | ±4.31 dB |
| 9 | Occupied bandwidth | 4(%) |

# 2. GENERAL INFORMATION

## 2.1 GENERAL DESCRIPTION OF THE EUT

<table>
<tr><td>Product Name</td><td>Android Car Radio</td></tr>
<tr><td>Trade Name</td><td>ZZH</td></tr>
<tr><td>Model Name</td><td>YC665</td></tr>
<tr><td>Series Model</td><td>ZH011,ZH012,ZH016,ZH017,ZH025,ZH026,YC765,YC863, YC865,YC866</td></tr>
<tr><td>Model Difference</td><td>The above product with same circuit, PCB layout, electrical parts, materials and wiring structures, Appearance shape, the materials of decorative accessories is same, the only difference is the model name.</td></tr>
<tr><td>Channel List</td><td>Please refer to the Note 2.</td></tr>
<tr><td>BT</td><td><table>
<tr><td>Operation Frequency:</td><td>2402-2480 MHz</td></tr>
<tr><td>Modulation Type:</td><td>GFSK</td></tr>
<tr><td>Radio Technology:</td><td>BLE</td></tr>
<tr><td>Bluetooth Configuration:</td><td>LE</td></tr>
<tr><td>Number Of Channel:</td><td>40 CH</td></tr>
<tr><td>Antenna Gain (dBi)</td><td>2.78</td></tr>
<tr><td>Transmitter rate:</td><td>1MHz</td></tr>
</table></td></tr>
<tr><td>Power Supply</td><td>DC 12V</td></tr>
<tr><td>Battery</td><td>N/A</td></tr>
<tr><td>Hardware version number</td><td>V1.0</td></tr>
<tr><td>Software version number</td><td>V1.0</td></tr>
<tr><td>Connecting I/O Port(s)</td><td>Please refer to the User's Manual</td></tr>
</table>

Note:

1. For a more detailed features description, please refer to the manufacturer’s specifications or the User's Manual.

2.

| Channel | Freq.(MHz) | Channel | Freq.(MHz) | Channel | Freq.(MHz) | Channel | Freq.(MHz) |
|---|---|---|---|---|---|---|---|
| 0 | 2402 | 10 | 2422 | 20 | 2442 | 30 | 2462 |
| 1 | 2404 | 11 | 2424 | 21 | 2444 | 31 | 2464 |
| 2 | 2406 | 12 | 2426 | 22 | 2446 | 32 | 2466 |
| 3 | 2408 | 13 | 2428 | 23 | 2448 | 33 | 2468 |
| 4 | 2410 | 14 | 2430 | 24 | 2450 | 34 | 2470 |
| 5 | 2412 | 15 | 2432 | 25 | 2452 | 35 | 2472 |
| 6 | 2414 | 16 | 2434 | 26 | 2454 | 36 | 2474 |
| 7 | 2416 | 17 | 2436 | 27 | 2456 | 37 | 2476 |
| 8 | 2418 | 18 | 2438 | 28 | 2458 | 38 | 2478 |
| 9 | 2420 | 19 | 2440 | 29 | 2460 | 39 | 2480 |

3. Table for Filed Antenna

| Ant. | Brand | Model Name | Antenna Type | Connector | Gain (dBi) | NOTE |
|---|---|---|---|---|---|---|
| 1 | N/A | N/A | External Antenna | N/A | 2.78 | BT Antenna |

## 2.2 DESCRIPTION OF THE TEST MODES

To investigate the maximum EMI emission characteristics generates from EUT, the test system was pre-scanning tested base on the consideration of following EUT operation mode or test configuration mode which possible have effect on EMI emission level. Each of these EUT operation mode(s) or test configuration mode(s) mentioned above was evaluated respectively.

Test software:

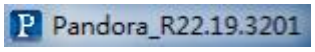


The test softeware was used to control EUT work in continuous TX mode, and select test channel, Wireless mode as below table

| No. | Test model descrption |
|---|---|
| 1 | Low channel GFSK |
| 2 | Middle channel GFSK |
| 3 | High channel GFSK |

Note:

1. All the test modes can be supply by DC Power Supply, only the result of the worst case recorded in the report. GFSK mode is worst mode.
2. For radiated emission, 3 axis were chosen for testing for each applicable mode.
3. The test voltage was tuned from 85% to 115% of the Nominal rate supply votage, and found that the worst case was the nominal rated supply condition, So the report just shows that condition's data

Configuration and peripherals

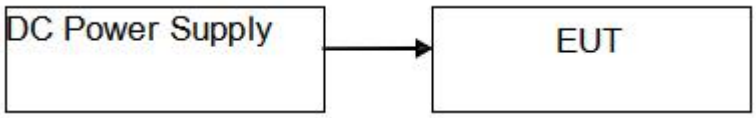

## 2.3 DESCRIPTION OF NECESSARY ACCESSORIES AND SUPPORT UNITS

The EUT has been tested as an independent unit together with other necessary accessories or support units. The following support units or accessories were used to form a representative test configuration during the tests.

Necessary accessories

| Item | Equipment | Mfr/Brand | Model/Type No. | Serial No. | Note |
|---|---|---|---|---|---|
| 1 | DC Power Supply | FLIKE | PS-1350D | Tr10308802 | N/A |
| | | | | | |
| | | | | | |
| | | | | | |

Support units

| Item | Equipment | Mfr/Brand | Model/Type No. | Serial No. | Note |
|---|---|---|---|---|---|
| | | | | | |
| | | | | | |
| | | | | | |
| | | | | | |

Note:

(1) The support equipment was authorized by Declaration of Confirmation.

(2) For detachable type I/O cable should be specified the length in cm in『Length』column.

(3) “YES” is means “shielded” “with core”; “NO” is means “unshielded” “without core”.

## 2.4 EQUIPMENTS LIST

Radiation Test equipment

| Kind of Equipment | Manufacturer | Type No. | Company No. | Last calibration | Calibrated until |
|---|---|---|---|---|---|
| EMI Test Receiver | R&S | ESRP 3 | FCS-E001 | 2024.08.28 | 2025.08.27 |
| Signal Analyzer | R&S | FSV40-N | FCS-E012 | 2024.08.28 | 2025.08.27 |
| Active loop Antenna | ZHINAN | ZN30900C | FCS-E013 | 2024.08.28 | 2025.08.27 |
| Bilog Antenna | SCHWARZBECK | VULB 9168 | FCS-E002 | 2024.08.28 | 2025.08.27 |
| Horn Antenna | SCHWARZBECK | BBHA 9120D | FCS-E003 | 2024.08.28 | 2025.08.27 |
| SHF-EHF Horn Antenna (18G-40GHz) | A-INFO | LB-180400-KF | FCS-E018 | 2024.08.28 | 2025.08.27 |
| Pre-Amplifier(0.1M-3G Hz) | EMCI | EM330N | FCS-E004 | 2024.08.28 | 2025.08.27 |
| Pre-Amplifier (1G-18GHz) | N/A | TSAMP-0518SE | FCS-E014 | 2024.08.28 | 2025.08.27 |
| Pre-Amplifier (18G-40GHz) | TERA-MW | TRLA-0400 | FCS-E019 | 2024.08.28 | 2025.08.27 |
| Temperature & Humidity | HTC-1 | victor | FCS-E005 | 2024.08.28 | 2025.08.27 |

Conduction Test equipment

| Kind of Equipment | Manufacturer | Type No. | Company No. | Last calibration | Calibrated until |
|---|---|---|---|---|---|
| EMI Test Receiver | R&S | ESPI | FCS-E020 | 2024.08.28 | 2025.08.27 |
| LISN | R&S | ENV216 | FCS-E007 | 2024.08.28 | 2025.08.27 |
| LISN | ETS | 3810/2NM | FCS-E009 | 2024.08.28 | 2025.08.27 |
| Temperature & Humidity | HTC-1 | victor | FCS-E008 | 2024.08.28 | 2025.08.27 |

RF Connected Test

| Kind of Equipment | Manufacturer | Type No. | Company No. | Last calibration | Calibrated until |
|---|---|---|---|---|---|
| Spectrum Analyzer | Keysight | N9020A | FCS-E015 | 2024.08.28 | 2025.08.27 |
| Spectrum Analyzer | Agilent | E4447A | MY50180039 | 2024.08.28 | 2025.08.27 |
| Spectrum Analyzer | R&S | FSV-40 | 101499 | 2024.08.28 | 2025.08.27 |

Radiation Test equipment

| Kind of Equipment | Manufacturer | Type No. | Company No. | Last calibration | Calibrated until |
|---|---|---|---|---|---|
| EMI Test Receiver | R&S | ESRP 3 | FCS-E001 | 2023.08.29 | 2024.08.28 |
| Signal Analyzer | R&S | FSV40-N | FCS-E012 | 2023.08.29 | 2024.08.28 |
| Active loop Antenna | ZHINAN | ZN30900C | FCS-E013 | 2023.08.29 | 2024.08.28 |
| Bilog Antenna | SCHWARZBECK | VULB 9168 | FCS-E002 | 2023.08.29 | 2024.08.28 |
| Horn Antenna | SCHWARZBECK | BBHA 9120D | FCS-E003 | 2023.08.29 | 2024.08.28 |
| SHF-EHF Horn Antenna (18G-40GHz) | A-INFO | LB-180400-KF | FCS-E018 | 2023.08.29 | 2024.08.28 |
| Pre-Amplifier(0.1M-3G Hz) | EMCI | EM330N | FCS-E004 | 2023.08.29 | 2024.08.28 |
| Pre-Amplifier (1G-18GHz) | N/A | TSAMP-0518SE | FCS-E014 | 2023.08.29 | 2024.08.28 |
| Pre-Amplifier (18G-40GHz) | TERA-MW | TRLA-0400 | FCS-E019 | 2023.08.29 | 2024.08.28 |
| Temperature & Humidity | HTC-1 | victor | FCS-E005 | 2023.08.29 | 2024.08.28 |

Conduction Test equipment

| Kind of Equipment | Manufacturer | Type No. | Company No. | Last calibration | Calibrated until |
|---|---|---|---|---|---|
| EMI Test Receiver | R&S | ESPI | FCS-E020 | 2023.08.29 | 2024.08.28 |
| LISN | R&S | ENV216 | FCS-E007 | 2023.08.29 | 2024.08.28 |
| LISN | ETS | 3810/2NM | FCS-E009 | 2023.08.29 | 2024.08.28 |
| Temperature & Humidity | HTC-1 | victor | FCS-E008 | 2023.08.29 | 2024.08.28 |

RF Connected Test

| Kind of Equipment | Manufacturer | Type No. | Company No. | Last calibration | Calibrated until |
|---|---|---|---|---|---|
| Spectrum Analyzer | Keysight | N9020A | FCS-E015 | 2023.08.29 | 2024.08.28 |
| Spectrum Analyzer | Agilent | E4447A | MY50180039 | 2023.08.29 | 2024.08.28 |
| Spectrum Analyzer | R&S | FSV-40 | 101499 | 2023.08.29 | 2024.08.28 |

# 3. RADIATED EMISSION MEASUREMENT

## 3.1 LIMIT

In any 100 kHz bandwidth outside the operating frequency band. In case the emission fall within the Restricted band specified on Part15.205(a)&209(a) limit in the table and according to ANSI C63.10-2013 below has to be followed

LIMITS OF RADIATED EMISSION MEASUREMENT (0.009mhz - 1000mhz)

| Frequencies (MHz) | Field Strength (micorvolts/meter) | Measurement Distance (meters) |
|---|---|---|
| 0.009~0.490 | 2400/F(KHz) | 300 |
| 0.490~1.705 | 24000/F(KHz) | 30 |
| 1.705~30.0 | 30 | 30 |
| 30~88 | 100 | 3 |
| 88~216 | 150 | 3 |
| 216~960 | 200 | 3 |
| Above 960 | 500 | 3 |

LIMITS OF RADIATED EMISSION MEASUREMENT (1GHz-25 GHz)

| FREQUENCY (MHz) | (dBuV/m) (at 3M) | |
|---|---|---|
| | PEAK | AVERAGE |
| Above 1000 | 74 | 54 |

LIMITS OF FIELD STRENGTH OF THE FUNDAMENTAL SIGNAL

| FREQUENCY (MHz) | (dBuV/m) (at 3M) | |
|---|---|---|
| | PEAK | AVERAGE |
| 2400-2483.5 | 114 | 94 |

Notes:
(1) The limit for radiated test was performed according to FCC PART 15C.
(2) The tighter limit applies at the band edges.
(3) Emission level (dBuV/m)=20log Emission level (uV/m).

3.2 TEST PROCEDURE

| Spectrum Parameter | Setting |
|---|---|
| Attenuation | Auto |
| Detector | Peak/AV |
| Start Frequency | 1000 MHz(Peak/AV) |
| Stop Frequency | 10th carrier hamonic(Peak/AV) |
| RB / VB (emission in restricted band) | PK=1MHz / 1MHz, AV=1 MHz /10 Hz (Peak detector is for Both) |

a. The measuring distance of at 3 m shall be used for measurements at frequency 0.009MHz up to 1GHz,and above 1GHz.
b. The EUT was placed on the top of a rotating table 0.8 meters (above 1GHz is 1.5 m) above the ground at a 3 meter anechoic chamber test site. The table was rotated 360 degrees to determine the position of the highest radiation.
c. The height of the equipment shall be 0.8 m(above 1GHz is 1.5 m); the height of the test antenna shall vary between 1 m to 4 m. horizontal and vertical polarizations of the antenna are set to make the measurement.
d. The initial step in collecting conducted emission data is a spectrum analyzer peak detector mode pre-scanning the measurement frequency range. Significant peaks are then marked and then QuasiPeak detector mode re-measured.
e. If the Peak Mode measured value compliance with and lower than Quasi Peak Mode Limit, the EUT shall be deemed to meet QP Limits and then no additional QP Mode measurement performed.
f. For the actual test configuration, please refer to the related Item –EUT Test Photos.

Note:
Both horizontal and vertical antenna polarities were tested and performed pretest to three orthogonal axis. The worst case emissions were reported
For fundamental frequency ,RBW>20dB BW ,VBW>RBW,PK detector for PK value, RMS detector for AV value.

3.3 TEST SETUP

（A）Radiated Emission Test-Up Frequency Below 30MHz

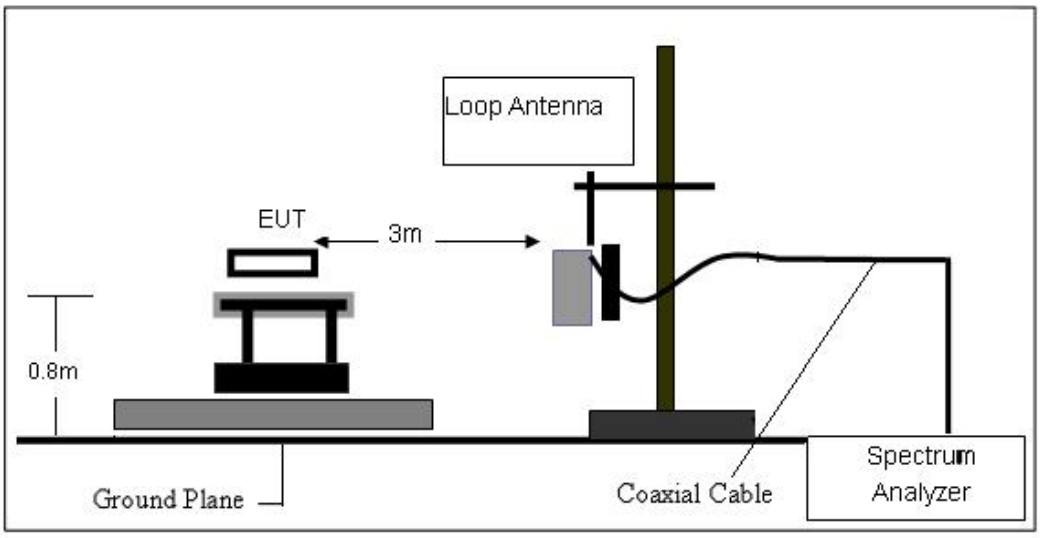


（B）Radiated Emission Test-Up Frequency 30MHz~1GHz

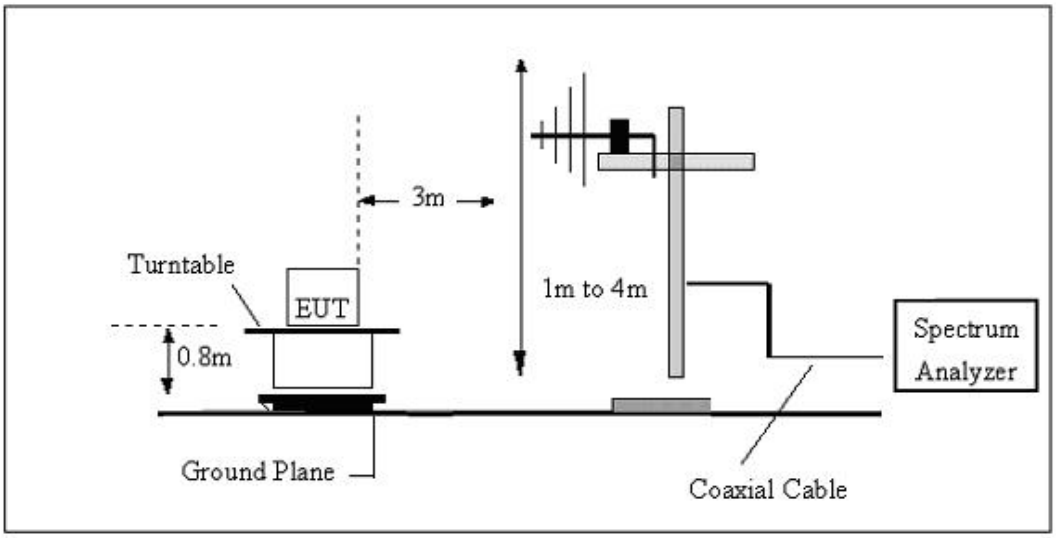


（C）Radiated Emission Test-Up Frequency Above 1GHz

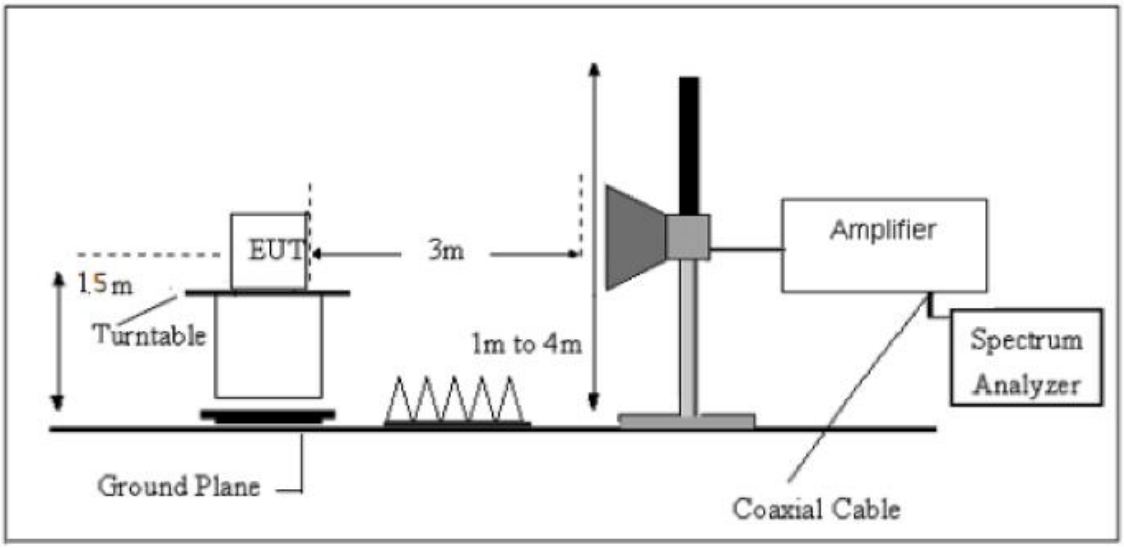

3.4 TEST RESULTS

| | | | |
|---|---|---|---|
| Temperature: | 25℃ | Relative Humidity: | 60% |
| Test Mode: | GFSK Mode | Test Voltage: | DC 12V |

For field strength of the fundamental signal

Peak

| Frequency (MHz) | Read Level (dBuV) | Antenna Factor (dB/m) | Cable Loss (dB) | Preamp Factor (dB) | Level (dBuV/m) | Limit Line (dBuV/m) | Over Limit (dB) | polarization |
|---|---|---|---|---|---|---|---|---|
| 2402.00 | 84.97 | 27.58 | 5.39 | 30.18 | 87.76 | 114.00 | -26.24 | Vertical |
| 2402.00 | 83.61 | 27.58 | 5.39 | 30.18 | 86.40 | 114.00 | -27.60 | Horizontal |
| 2440.00 | 83.94 | 27.55 | 5.43 | 30.06 | 86.86 | 114.00 | -27.14 | Vertical |
| 2440.00 | 82.77 | 27.55 | 5.43 | 30.06 | 85.69 | 114.00 | -28.31 | Horizontal |
| 2480.00 | 85.63 | 27.52 | 5.47 | 29.93 | 88.69 | 114.00 | -25.31 | Vertical |
| 2480.00 | 83.44 | 27.52 | 5.47 | 29.93 | 86.50 | 114.00 | -27.50 | Horizontal |

Avg

| Frequency (MHz) | Read Level (dBuV) | Antenna Factor (dB/m) | Cable Loss (dB) | Preamp Factor (dB) | Level (dBuV/m) | Limit Line (dBuV/m) | Over Limit (dB) | polarization |
|---|---|---|---|---|---|---|---|---|
| 2402.00 | 76.74 | 27.58 | 5.39 | 30.18 | 79.53 | 94.00 | -14.47 | Vertical |
| 2402.00 | 74.95 | 27.58 | 5.39 | 30.18 | 77.74 | 94.00 | -16.26 | Horizontal |
| 2440.00 | 75.28 | 27.55 | 5.43 | 30.06 | 78.20 | 94.00 | -15.80 | Vertical |
| 2440.00 | 72.58 | 27.55 | 5.43 | 30.06 | 75.50 | 94.00 | -18.50 | Horizontal |
| 2480.00 | 77.42 | 27.52 | 5.47 | 29.93 | 80.48 | 94.00 | -13.52 | Vertical |
| 2480.00 | 75.04 | 27.52 | 5.47 | 29.93 | 78.10 | 94.00 | -15.90 | Horizontal |

For spurious emission

(9KHz-30MHz)

| Freq. | Reading | Limit | Margin | State | Test Result |
|---|---|---|---|---|---|
| (MHz) | (dBuV/m) | (dBuV/m) | (dB) | P/F | |
| -- | -- | -- | -- | -- | PASS |
| -- | -- | -- | -- | -- | PASS |

Note:

The amplitude of spurious emissions which are attenuated by more than 20dB below the permissible value has no need to be reported.

Distance extrapolation factor =40 log (specific distance/test distance)(dB);

Limit line = specific limits (dBuv) + distance extrapolation factor.

(30MHZ-1000MHZ)

| | | | |
|---|---|---|---|
| Temperature: | 23.7℃ | Relative Humidity: | 61% |
| Test Voltage: | DC 12V | Phase: | Horizontal |
| Test Mode: | GFSK | | |

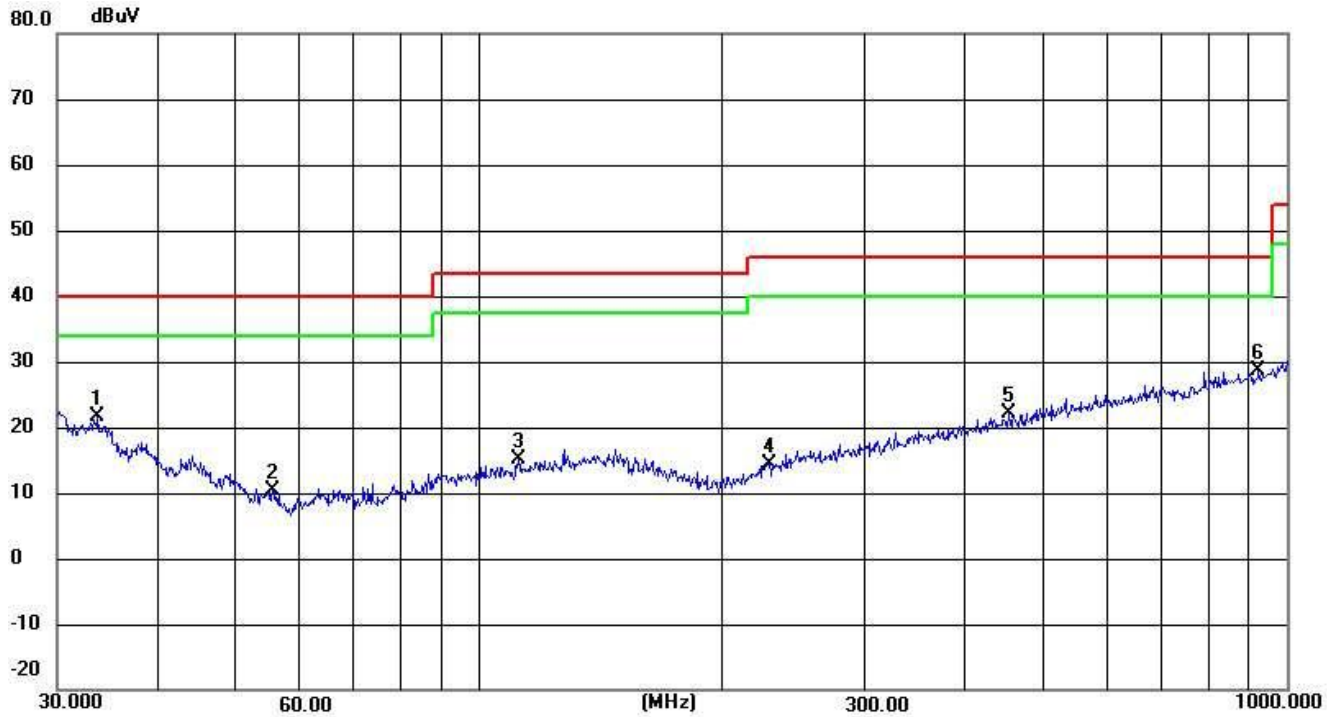


| No. | Frequency (MHz) | Reading (dBuV) | Correction (dB/m) | Result (dBuV/m) | Limit (dBuV/m) | Margin (dB) | Remark |
|---|---|---|---|---|---|---|---|
| 1 | 33.6802 | 31.28 | -9.65 | 21.63 | 40.00 | -18.37 | QP |
| 2 | 55.4147 | 30.26 | -19.80 | 10.46 | 40.00 | -29.54 | QP |
| 3 | 111.7380 | 47.30 | -32.18 | 15.12 | 43.50 | -28.38 | QP |
| 4 | 228.4904 | 46.49 | -32.01 | 14.48 | 46.00 | -31.52 | QP |
| 5 | 452.7197 | 53.68 | -31.44 | 22.24 | 46.00 | -23.76 | QP |
| 6 | 922.5157 | 59.27 | -30.68 | 28.59 | 46.00 | -17.41 | QP |

Remarks:

1. Margin = Result (Result =Reading + Factor ) – Limit

| | | | |
|---|---|---|---|
| Temperature: | 22.7℃ | Relative Humidity: | 61% |
| Test Voltage: | DC 12V | Phase: | Vertical |
| Test Mode: | GFSK | | |

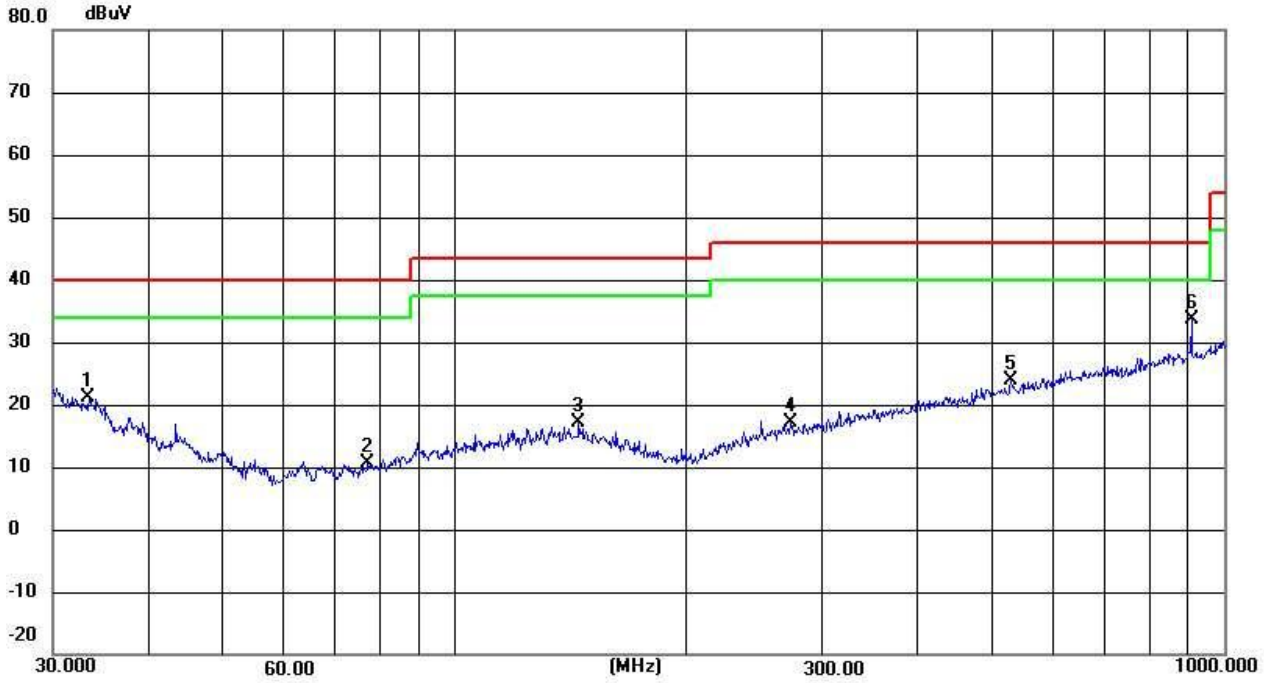


| No. | Frequency (MHz) | Reading (dBuV) | Correction (dB/m) | Result (dBuV/m) | Limit (dBuV/m) | Margin (dB) | Remark |
|---|---|---|---|---|---|---|---|
| 1 | 33.4449 | 30.51 | -9.50 | 21.01 | 40.00 | -18.99 | QP |
| 2 | 77.0505 | 42.78 | -32.15 | 10.63 | 40.00 | -29.37 | QP |
| 3 | 144.8418 | 49.18 | -32.13 | 17.05 | 43.50 | -26.45 | QP |
| 4 | 273.2341 | 49.04 | -31.94 | 17.10 | 46.00 | -28.90 | QP |
| 5 | 528.2458 | 55.01 | -31.25 | 23.76 | 46.00 | -22.24 | QP |
| 6 | 906.4824 | 64.20 | -30.69 | 33.51 | 46.00 | -12.49 | QP |

Remarks:

1. Margin = Result (Result =Reading + Factor ) – Limit

(1GHZ~25GHZ)

LOW CH(GFSK)

PEAK

| Frequency (MHz) | Read Level (dBuV) | Antenna Factor (dB/m) | Cable Loss (dB) | Preamp Factor (dB) | Level (dBuV/m) | Limit Line (dBuV/m) | Over Limit (dB) | polarization |
|---|---|---|---|---|---|---|---|---|
| 4804.00 | 35.32 | 31.78 | 8.60 | 32.09 | 43.61 | 74.00 | -30.39 | Vertical |
| 7206.00 | 30.52 | 36.15 | 11.65 | 32.00 | 46.32 | 74.00 | -27.68 | Vertical |
| 9608.00 | 30.30 | 37.95 | 14.14 | 31.62 | 50.77 | 74.00 | -23.23 | Vertical |
| 12010.00 | * | | | | | 74.00 | | Vertical |
| 14412.00 | * | | | | | 74.00 | | Vertical |
| 4804.00 | 39.20 | 31.78 | 8.60 | 32.09 | 47.49 | 74.00 | -26.51 | Horizontal |
| 7206.00 | 32.10 | 36.15 | 11.65 | 32.00 | 47.90 | 74.00 | -26.10 | Horizontal |
| 9608.00 | 29.53 | 37.95 | 14.14 | 31.62 | 50.00 | 74.00 | -24.00 | Horizontal |
| 12010.00 | * | | | | | 74.00 | | Horizontal |
| 14412.00 | * | | | | | 74.00 | | Horizontal |

AVG

| Frequency (MHz) | Read Level (dBuV) | Antenna Factor (dB/m) | Cable Loss (dB) | Preamp Factor (dB) | Level (dBuV/m) | Limit Line (dBuV/m) | Over Limit (dB) | polarization |
|---|---|---|---|---|---|---|---|---|
| 4804.00 | 24.51 | 31.78 | 8.60 | 32.09 | 32.80 | 54.00 | -21.20 | Vertical |
| 7206.00 | 19.43 | 36.15 | 11.65 | 32.00 | 35.23 | 54.00 | -18.77 | Vertical |
| 9608.00 | 18.63 | 37.95 | 14.14 | 31.62 | 39.10 | 54.00 | -14.90 | Vertical |
| 12010.00 | * | | | | | 54.00 | | Vertical |
| 14412.00 | * | | | | | 54.00 | | Vertical |
| 4804.00 | 28.52 | 31.78 | 8.60 | 32.09 | 36.81 | 54.00 | -17.19 | Horizontal |
| 7206.00 | 21.47 | 36.15 | 11.65 | 32.00 | 37.27 | 54.00 | -16.73 | Horizontal |
| 9608.00 | 18.19 | 37.95 | 14.14 | 31.62 | 38.66 | 54.00 | -15.34 | Horizontal |
| 12010.00 | * | | | | | 54.00 | | Horizontal |
| 14412.00 | * | | | | | 54.00 | | Horizontal |

MIDDLE CH(GFSK)

PEAK

| Frequency (MHz) | Read Level (dBuV) | Antenna Factor (dB/m) | Cable Loss (dB) | Preamp Factor (dB) | Level (dBuV/m) | Limit Line (dBuV/m) | Over Limit (dB) | polarization |
|---|---|---|---|---|---|---|---|---|
| 4880.00 | 34.95 | 31.85 | 8.67 | 32.12 | 43.35 | 74.00 | -30.65 | Vertical |
| 7320.00 | 30.27 | 36.37 | 11.72 | 31.89 | 46.47 | 74.00 | -27.53 | Vertical |
| 9760.00 | 30.08 | 38.35 | 14.25 | 31.62 | 51.06 | 74.00 | -22.94 | Vertical |
| 12200.00 | * | | | | | 74.00 | | Vertical |
| 14640.00 | * | | | | | 74.00 | | Vertical |
| 4880.00 | 38.75 | 31.85 | 8.67 | 32.12 | 47.15 | 74.00 | -26.85 | Horizontal |
| 7320.00 | 31.81 | 36.37 | 11.72 | 31.89 | 48.01 | 74.00 | -25.99 | Horizontal |
| 9760.00 | 29.28 | 38.35 | 14.25 | 31.62 | 50.26 | 74.00 | -23.74 | Horizontal |
| 12200.00 | * | | | | | 74.00 | | Horizontal |
| 14640.00 | * | | | | | 74.00 | | Horizontal |

AVG

| Frequency (MHz) | Read Level (dBuV) | Antenna Factor (dB/m) | Cable Loss (dB) | Preamp Factor (dB) | Level (dBuV/m) | Limit Line (dBuV/m) | Over Limit (dB) | polarization |
|---|---|---|---|---|---|---|---|---|
| 4880.00 | 24.21 | 31.85 | 8.67 | 32.12 | 32.61 | 54.00 | -21.39 | Vertical |
| 7320.00 | 19.22 | 36.37 | 11.72 | 31.89 | 35.42 | 54.00 | -18.58 | Vertical |
| 9760.00 | 18.45 | 38.35 | 14.25 | 31.62 | 39.43 | 54.00 | -14.57 | Vertical |
| 12200.00 | * | | | | | 54.00 | | Vertical |
| 14640.00 | * | | | | | 54.00 | | Vertical |
| 4880.00 | 28.18 | 31.85 | 8.67 | 32.12 | 36.58 | 54.00 | -17.42 | Horizontal |
| 7320.00 | 21.24 | 36.37 | 11.72 | 31.89 | 37.44 | 54.00 | -16.56 | Horizontal |
| 9760.00 | 17.98 | 38.35 | 14.25 | 31.62 | 38.96 | 54.00 | -15.04 | Horizontal |
| 12200.00 | * | | | | | 54.00 | | Horizontal |
| 14640.00 | * | | | | | 54.00 | | Horizontal |

HIGH CH(GFSK)

PEAK

| Frequency (MHz) | Read Level (dBuV) | Antenna Factor (dB/m) | Cable Loss (dB) | Preamp Factor (dB) | Level (dBuV/m) | Limit Line (dBuV/m) | Over Limit (dB) | polarization |
|---|---|---|---|---|---|---|---|---|
| 4960.00 | 34.74 | 31.93 | 8.73 | 32.16 | 43.24 | 74.00 | -30.76 | Vertical |
| 7440.00 | 30.13 | 36.59 | 11.79 | 31.78 | 46.73 | 74.00 | -27.27 | Vertical |
| 9920.00 | 29.96 | 38.81 | 14.38 | 31.88 | 51.27 | 74.00 | -22.73 | Vertical |
| 12400.00 | * | | | | | 74.00 | | Vertical |
| 14880.00 | * | | | | | 74.00 | | Vertical |
| 4960.00 | 38.51 | 31.93 | 8.73 | 32.16 | 47.01 | 74.00 | -26.99 | Horizontal |
| 7440.00 | 31.66 | 36.59 | 11.79 | 31.78 | 48.26 | 74.00 | -25.74 | Horizontal |
| 9920.00 | 29.14 | 38.81 | 14.38 | 31.88 | 50.45 | 74.00 | -23.55 | Horizontal |
| 12400.00 | * | | | | | 74.00 | | Horizontal |
| 14880.00 | * | | | | | 74.00 | | Horizontal |

AVG

| Frequency (MHz) | Read Level (dBuV) | Antenna Factor (dB/m) | Cable Loss (dB) | Preamp Factor (dB) | Level (dBuV/m) | Limit Line (dBuV/m) | Over Limit (dB) | polarization |
|---|---|---|---|---|---|---|---|---|
| 4960.00 | 24.05 | 31.93 | 8.73 | 32.16 | 32.55 | 54.00 | -21.45 | Vertical |
| 7440.00 | 19.11 | 36.59 | 11.79 | 31.78 | 35.71 | 54.00 | -18.29 | Vertical |
| 9920.00 | 18.35 | 38.81 | 14.38 | 31.88 | 39.66 | 54.00 | -14.34 | Vertical |
| 12400.00 | * | | | | | 54.00 | | Vertical |
| 14880.00 | * | | | | | 54.00 | | Vertical |
| 4960.00 | 27.99 | 31.93 | 8.73 | 32.16 | 36.49 | 54.00 | -17.51 | Horizontal |
| 7440.00 | 21.12 | 36.59 | 11.79 | 31.78 | 37.72 | 54.00 | -16.28 | Horizontal |
| 9920.00 | 17.87 | 38.81 | 14.38 | 31.88 | 39.18 | 54.00 | -14.82 | Horizontal |
| 12400.00 | * | | | | | 54.00 | | Horizontal |
| 14880.00 | * | | | | | 54.00 | | Horizontal |

*Remark:*

1. *Final Level =Receiver Read level + Antenna Factor + Cable Loss – Preamplifier Factor*
2. *The emission levels of other frequencies are very lower than the limit and not show in test report.*
3. *"*", means this data is the too weak instrument of signal is unable to test.*

# 4. BAND EDGE TEST

## 4.1 LIMIT

According to §15.249(d), Emissions radiated outside of the specified frequency bands, except for harmonics, shall be attenuated by at least 50 dB below the level of the fundamental or to the general radiated emission limits in §15.209, whichever is the lesser attenuation.

## 4.2 TEST PROCEDURE

a. The EUT is placed on a turntable, which is 1.5m above ground plane.

b. EUT is set 3m away from the receiving antenna, which is varied from 1m to 4m to find out the highest emissions.

c. Use the following spectrum analyzer settings:
Span = wide enough to fully capture the emission being measured, RBW = 1 MHz, VBW ≥ RBW, Sweep = auto, Detector function = peak, Trace = max hold
Follow the guidelines in ANSI C63.10 with respect to maximizing the emission by rotating the EUT, adjusting the measurement antenna height and polarization, etc.

d. The peak reading of the emission, after being corrected by the antenna factor, cable loss, pre-amp gain, etc., is the peak field strength, submit this data. Each emission was to be maximized by changing the polarization of receiving antenna both horizontal and vertical.

e. Set the VBW to 10 Hz, while maintaining all of the other instrument settings. This peak level, once corrected, must comply with the limit specified in Section 15.209. If the duty cycle per channel of the hopping signal is less than 100 ms, then the reading obtained with the 10 Hz VBW may be further adjusted by a “duty cycle correction factor”, derived from 20log(duty cycle/100 ms), in an effort to demonstrate compliance with the 15.209 limit. Submit this data.

Note:

For fundamental frequency ,RBW>20dB BW ,VBW>RBW,PK detector for PK value, RMS detector for AV value.

## 4.3 TEST SETUP

Radiated Emission Test-Up Frequency Above 1GHz

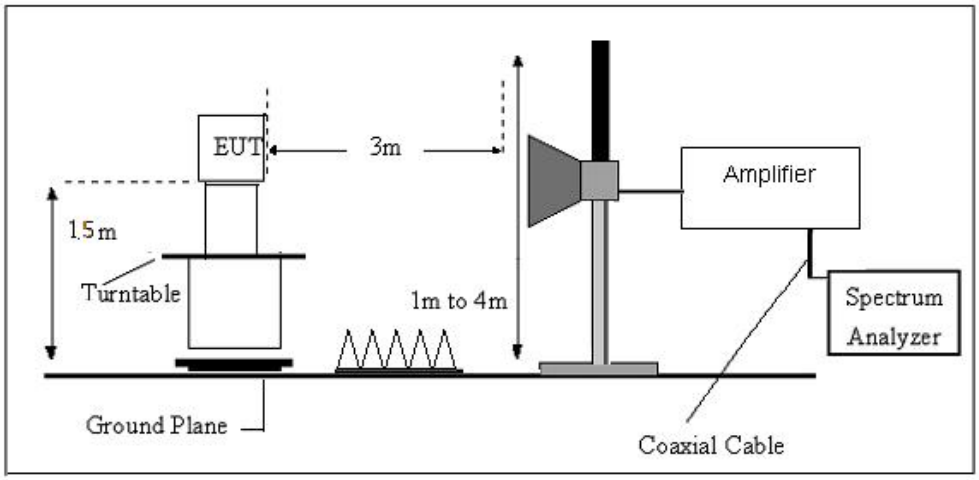

## 4.4 TEST RESULTS

### Low CH (GFSK)

Peak value:

| Frequency (MHz) | Read Level (dBuV) | Antenna Factor (dB/m) | Cable Loss (dB) | Preamp Factor (dB) | Level (dBuV/m) | Limit Line (dBuV/m) | Over Limit (dB) | Polarization |
|---|---|---|---|---|---|---|---|---|
| 2310.00 | 37.16 | 27.61 | 5.36 | 30.18 | 39.95 | 74.00 | -34.05 | Horizontal |
| 2390.00 | 37.32 | 27.59 | 5.38 | 30.18 | 40.11 | 74.00 | -33.89 | Horizontal |
| 2400.00 | 53.32 | 27.58 | 5.39 | 30.18 | 56.11 | 74.00 | -17.89 | Horizontal |
| 2310.00 | 37.65 | 27.61 | 5.36 | 30.18 | 40.44 | 74.00 | -33.56 | Vertical |
| 2390.00 | 37.34 | 27.59 | 5.38 | 30.18 | 40.13 | 74.00 | -33.87 | Vertical |
| 2400.00 | 54.76 | 27.58 | 5.39 | 30.18 | 57.55 | 74.00 | -16.45 | Vertical |

Average value:

| Frequency (MHz) | Read Level (dBuV) | Antenna Factor (dB/m) | Cable Loss (dB) | Preamp Factor (dB) | Level (dBuV/m) | Limit Line (dBuV/m) | Over Limit (dB) | Polarization |
|---|---|---|---|---|---|---|---|---|
| 2310.00 | 29.65 | 27.61 | 5.36 | 30.18 | 32.44 | 54.00 | -21.56 | Horizontal |
| 2390.00 | 29.13 | 27.59 | 5.38 | 30.18 | 31.92 | 54.00 | -22.08 | Horizontal |
| 2400.00 | 40.03 | 27.58 | 5.39 | 30.18 | 42.82 | 54.00 | -11.18 | Horizontal |
| 2310.00 | 28.34 | 27.61 | 5.36 | 30.18 | 31.13 | 54.00 | -22.87 | Vertical |
| 2390.00 | 28.68 | 27.59 | 5.38 | 30.18 | 31.47 | 54.00 | -22.53 | Vertical |
| 2400.00 | 41.15 | 27.58 | 5.39 | 30.18 | 43.94 | 54.00 | -10.06 | Vertical |

### High CH(GFSK)

Peak value:

| Frequency (MHz) | Read Level (dBuV) | Antenna Factor (dB/m) | Cable Loss (dB) | Preamp Factor (dB) | Level (dBuV/m) | Limit Line (dBuV/m) | Over Limit (dB) | Polarization |
|---|---|---|---|---|---|---|---|---|
| 2483.50 | 38.76 | 27.53 | 5.47 | 29.93 | 41.83 | 74.00 | -32.17 | Horizontal |
| 2500.00 | 38.99 | 27.55 | 5.49 | 29.93 | 42.10 | 74.00 | -31.90 | Horizontal |
| 2483.50 | 38.68 | 27.53 | 5.47 | 29.93 | 41.75 | 74.00 | -32.25 | Vertical |
| 2500.00 | 39.46 | 27.55 | 5.49 | 29.93 | 42.57 | 74.00 | -31.43 | Vertical |

Average value:

| Frequency (MHz) | Read Level (dBuV) | Antenna Factor (dB/m) | Cable Loss (dB) | Preamp Factor (dB) | Level (dBuV/m) | Limit Line (dBuV/m) | Over Limit (dB) | Polarization |
|---|---|---|---|---|---|---|---|---|
| 2483.50 | 31.89 | 27.53 | 5.47 | 29.93 | 34.96 | 54.00 | -19.04 | Horizontal |
| 2500.00 | 30.68 | 27.55 | 5.49 | 29.93 | 33.79 | 54.00 | -20.21 | Horizontal |
| 2483.50 | 32.64 | 27.53 | 5.47 | 29.93 | 35.71 | 54.00 | -18.29 | Vertical |
| 2500.00 | 30.14 | 27.55 | 5.49 | 29.93 | 33.25 | 54.00 | -20.75 | Vertical |

*Remark:*

1. *Final Level =Receiver Read level + Antenna Factor + Cable Loss – Preamplifier Factor*

# 5. 20 DB BANDWIDTH TEST

## 5.1 LIMIT

According to 15.215 (c) Intentional radiators operating under the alternative provisions to the general emission limits, as contained in § 15.217 through 15.257 and in Subpart E of this part, must be designed to ensure that the 20 dB bandwidth of the emission, or whatever bandwidth may otherwise be specified in the specific rule section under which the equipment operates, is contained within the frequency band designated in the rule section under which the equipment is operated. The requirement to contain the designated bandwidth of the emission within the specified frequency band includes the effects from frequency sweeping, frequency hopping and other modulation techniques that may be employed as well as the frequency stability of the transmitter over expected variations in temperature and supply voltage. If a frequency stability is not specified in the regulations, it is recommended that the fundamental emission be kept within at least the central 80% of the permitted band in order to minimize the possibility of out-of-band operation

## 5.2 TEST PROCEDURE

a. Check the calibration of the measuring instrument using either an internal calibrator or a known signal from an external generator

b. Position the EUT without connection to measurement instrument. Turn on the EUT and connect it to measurement instrument. Then set it to any one convenient frequency within its operating range. Set a reference level on the measuring instrument equal to the highest peak value.

c. Measure the frequency difference of two frequencies that were attenuated 20 dB from the reference level. Record the frequency difference as the emission bandwidth.

## 5.3 TEST SETUP

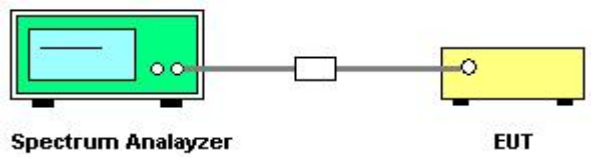

## 5.4 TEST RESULTS

| | | | |
|---|---|---|---|
| Temperature: | 25℃ | Relative Humidity: | 50% |
| Test Mode: | GFSK | Test Voltage: | DC 12V |

| Frequency | 20dB Bandwidth (MHz) | Result |
|---|---|---|
| 2402 MHz | 1.071 | PASS |
| 2440 MHz | 1.073 | PASS |
| 2480 MHz | 1.069 | PASS |

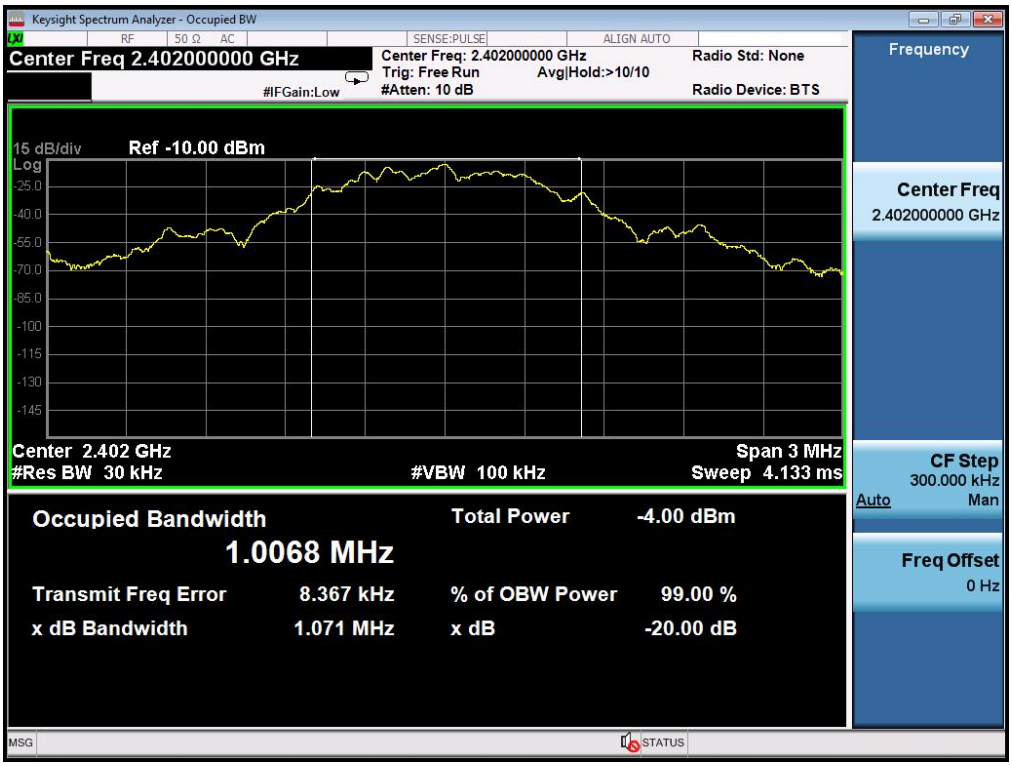

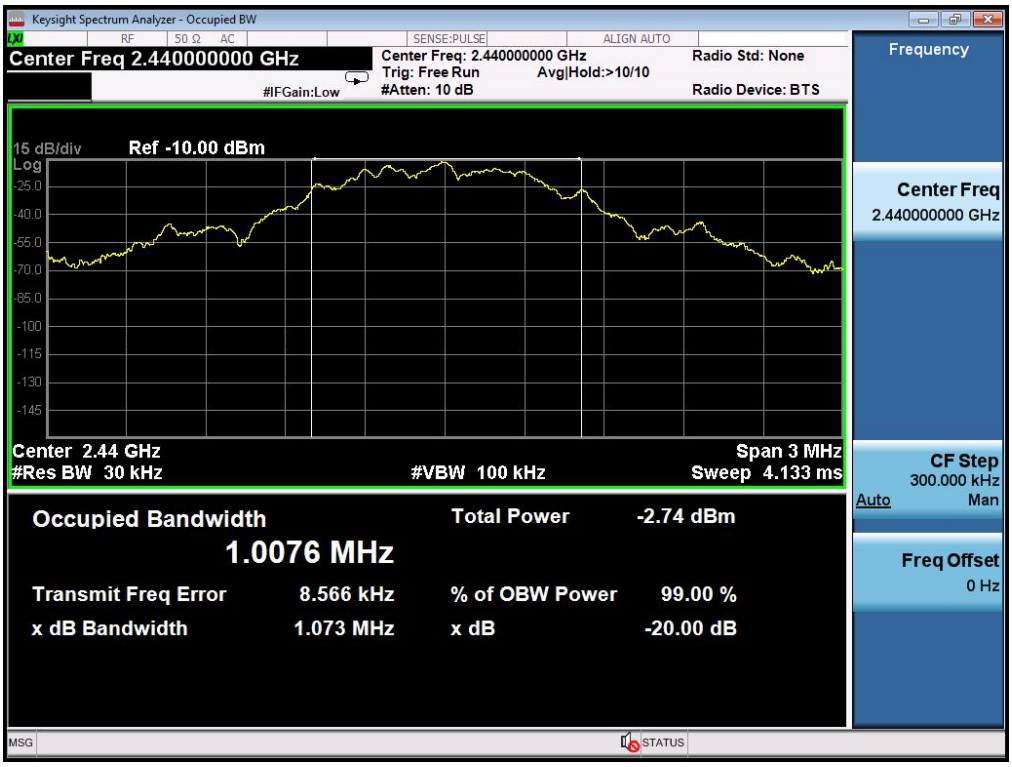
Keysight Spectrum Analyzer - Occupied BW
Center Freq 2.440000000 GHz
Center Freq: 2.440000000 GHz
Trig: Free Run
Avg|Hold:>10/10
#Atten: 10 dB
Radio Std: None
Radio Device: BTS
#IFGain:Low
Frequency
15 dB/div
Ref -10.00 dBm
Center 2.44 GHz
#Res BW 30 kHz
#VBW 100 kHz
Span 3 MHz
Sweep 4.133 ms
Occupied Bandwidth
1.0076 MHz
Total Power -2.74 dBm
Transmit Freq Error 8.566 kHz
% of OBW Power 99.00 %
x dB Bandwidth 1.073 MHz
x dB -20.00 dB
Center Freq
2.440000000 GHz
CF Step
300.000 kHz
Auto Man
Freq Offset
0 Hz
MSG
STATUS

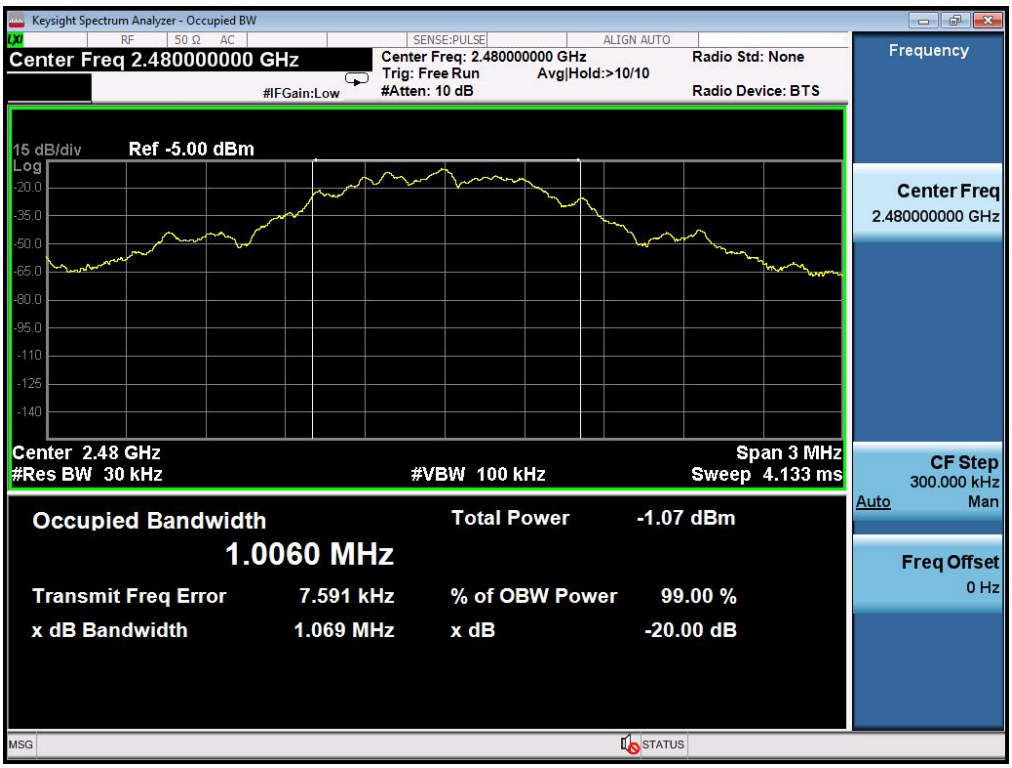
Keysight Spectrum Analyzer - Occupied BW
Center Freq 2.480000000 GHz
Center Freq: 2.480000000 GHz
Trig: Free Run
Avg|Hold:>10/10
#Atten: 10 dB
Radio Std: None
Radio Device: BTS
#IFGain:Low
Frequency
15 dB/div
Ref -5.00 dBm
Center 2.48 GHz
#Res BW 30 kHz
#VBW 100 kHz
Span 3 MHz
Sweep 4.133 ms
Occupied Bandwidth
1.0060 MHz
Total Power -1.07 dBm
Transmit Freq Error 7.591 kHz
% of OBW Power 99.00 %
x dB Bandwidth 1.069 MHz
x dB -20.00 dB
Center Freq
2.480000000 GHz
CF Step
300.000 kHz
Auto Man
Freq Offset
0 Hz
MSG
STATUS

# 6 CONDUCTED EMISSION MEASUREMENT

## 6.1 LIMIT

Operating frequency band. In case the emission fall within the restricted band specified on Part 207(a) limit in the table below has to be followed.

| FREQUENCY (MHz) | Conducted Emissionlimit (dBuV) | |
|---|---|---|
| | Quasi-peak | Average |
| 0.15 -0.5 | 66 - 56 * | 56 - 46 * |
| 0.50 -5.0 | 56.00 | 46.00 |
| 5.0 -30.0 | 60.00 | 50.00 |

Note:

(1) The tighter limit applies at the band edges.

(2) The limit of " * " marked band means the limitation decreases linearly with the logarithm of the frequency in the range.

## 6.2 TEST PROCEDURE

The following table is the setting of the receiver

| **Receiver Parameters** | **Setting** |
|---|---|
| Attenuation | 10 dB |
| Start Frequency | 0.15 MHz |
| Stop Frequency | 30 MHz |
| IF Bandwidth | 9 kHz |

a. The EUT was 0.8 meters from the horizontal ground plane and 0.4 meters from the vertical ground plane with EUT being connected to the power mains through a line impedance stabilization network (LISN). All other support equipments powered from additional LISN(s). The LISN provide 50 Ohm/ 50uH of coupling impedance for the measuring instrument.

b. Interconnecting cables that hang closer than 40 cm to the ground plane shall be folded back and forth in the center forming a bundle 30 to 40 cm long.

c. I/O cables that are not connected to a peripheral shall be bundled in the center. The end of the cable may be terminated, if required, using the correct terminating impedance. The overall length shall not exceed 1 m.

d. LISN at least 80 cm from nearest part of EUT chassis.

e. For the actual test configuration, please refer to the related Item –EUT Test Photos.

6.3 TEST SETUP

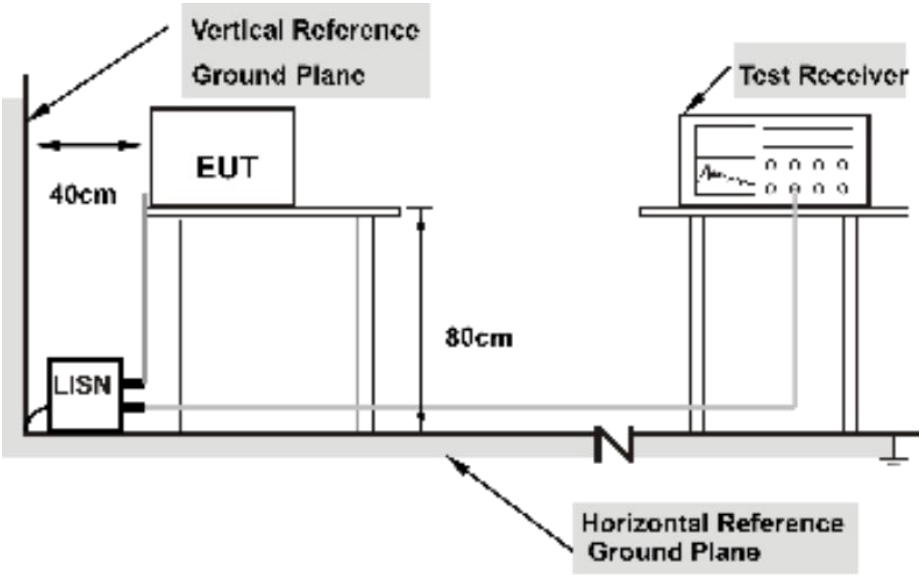


Note: 1.Support units were connected to second LISN.

2.Both of LISNs (AMN) are 80 cm from EUT and at least 80 from other units and other metal planes

## 6.4 TEST RESULTS

| | | | |
|---|---|---|---|
| Temperature: | 25℃ | Relative Humidity: | 50% |
| Test Mode: | N/A | Test Voltage: | N/A |
| Result: | L | Result: | N/A |

N/A

| | | | |
|---|---|---|---|
| Temperature: | 25℃ | Relative Humidity: | 50% |
| Test Mode: | N/A | Test Voltage: | N/A |
| Result: | N | Result: | N/A |

N/A

# 7. ANTENNA REQUIREMENT

## 7.1 STANDARD REQUIREMENT

15.203 requirement: For intentional device, according to 15.203: an intentional radiator shall be designed to ensure that no antenna other than that furnished by the responsible party shall be used with the device.

## 7.2 EUT ANTENNA

The antennas used for this product are external antenna and other than that furnished by the responsible party shall be used with the device, the maximum peak gain of the transmit antenna is 2.78dBi.