Microinverter User Manual

V 1.0

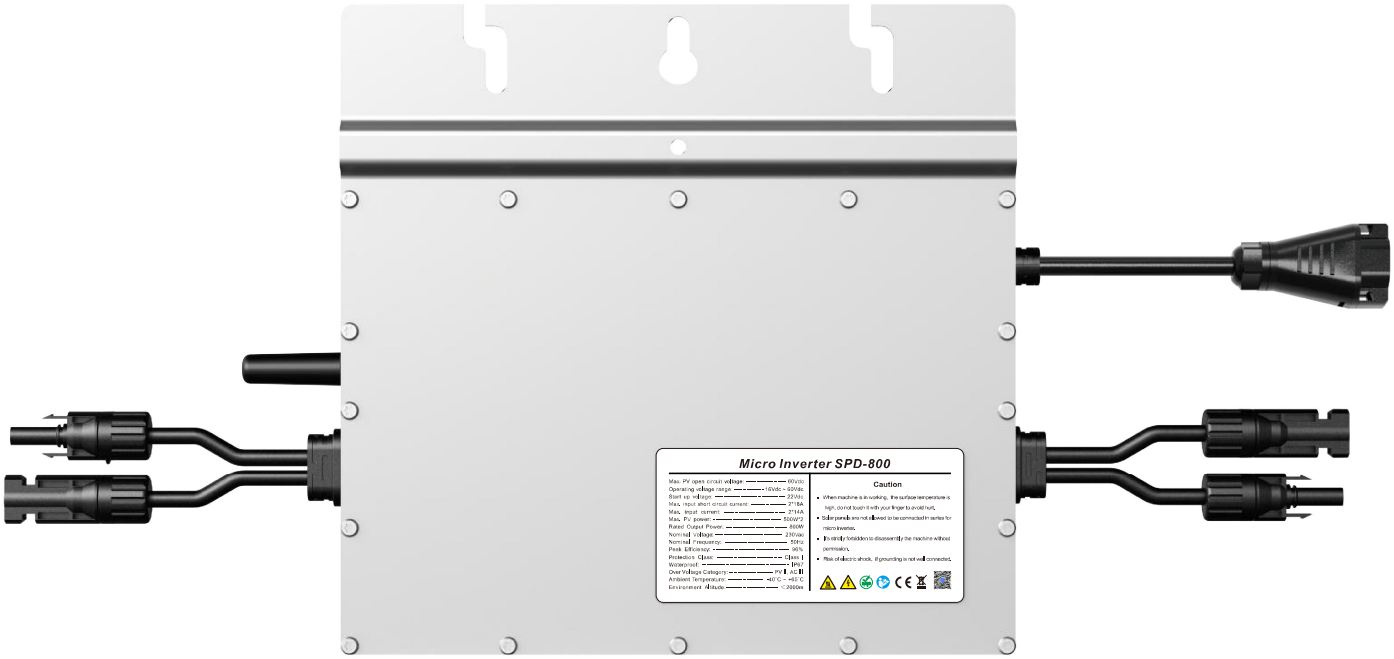

Microinverter Model SPD-800

Herald

Before using this product, read this document carefully to understand and use it correctly.
Keep this document in a safe place for future reference.
Improper operation may cause injury or damage.
By using this product, you agree to the terms and conditions in this document.
The Company is not liable for damages due to improper use.
The Company has the final interpretation of this document and related documents.
Check the official website for updates to this document.

Catalogs

1. Important notes **2**
1.1 Product Scope 2
1.2 Important safety instructions 2
1.3 Environmental requirements 2

2. Overview **3**
2.1 Overview of Grid-connected PV Inverter Systems 3
2.2 Microinverter Overview 3
2.3 Functional Introduction 3
2.4 System Monitoring 4

3. Installation **4**
3.1 Installation requirements 4
3.2 Installation position 4
3.3 Installation method 4
3.4 Installation procedure 5
3.5 Wiring diagram 7

4. APP **7**
4.1 Download APP 7
4.2 Register account 7
4.3 Connect the microinverter 8
4.4 Reset the program 8
4.5 Indicator light status 9
4.6 Troubleshooting 9

5. Data sheets **10**

6. Purchase accessories separately **11**
6.1 List of additional accessories and tools to be purchased 11
6.2 Parallel cable laying 11

1. Important notes

1.1 Product Scope

This manual describes the assembly, installation, commissioning, maintenance and troubleshooting of the following models of microinverters.

1.2 Important safety instructions

1, Before installing, using or servicing this product, please read all documentation carefully, which may have changed due to product updates or other reasons.
2, All operations, including transportation, installation, startup and maintenance, must be performed by trained and qualified personnel.
3, Before installation, check the packaging and appearance of the unit to ensure that it has not been damaged during transportation.
4, Before connecting, make sure all cables and plugs are intact and dry to avoid electric shock.
5, Before the end of the installation, you should make sure that the solar PV panels, microinverter is disconnected from the home power supply.
6, Personal protective equipment such as gloves and goggles must be used during installation.
7, Do not install or operate the equipment under extreme weather conditions, such as lightning, snow, heavy rain, strong winds.
8, The warning signs on the equipment must not be damaged, painted or torn off.
9, After installation, remove any remnants of the installation, such as cut cable ties, torn insulation, etc.
10, Do not attempt to repair the microinverter, if a malfunction occurs, contact our customer support department and initiate the replacement process. Private repair or opening the microinverter will void the warranty policy.
11, Understand the components and functions of the grid-connected PV system and make sure that all electrical connections, as well as the voltage and frequency of the equipment, comply with local electrical standards.
12, Use extreme caution whenever disconnecting the inverter from the utility grid, as certain components may retain enough electrical charge to create an electrical shock hazard. Danger of electric shock.
13, Make sure that the microinverter is securely mounted to prevent accidents or damage to the product from falling.
14, For safety reasons, the device should use original or authorized cables, we are not responsible for damage to the device caused by the use of third-party accessories.

1.3 Environmental requirements

1, Make sure the equipment is installed, operated or stored in a well-ventilated area; inadequate ventilation can cause permanent damage to the equipment.
2, Do not install or place the equipment in a strong electrical and magnetic field environment to avoid radio interference.
3, Do not install the equipment in flammable, explosive, corrosive, extremely hot, cold and humid environments.
4, Do not install the device where children and pets can touch it.

2. Overview

2.1 Overview of grid-connected PV inverter systems

The grid-connected PV inverter system consists of a PV module, a microinverter, a power meter and a power grid. The microinverter converts the DC power from the PV module into AC power that meets the requirements of the grid and is connected to the grid through the meter.

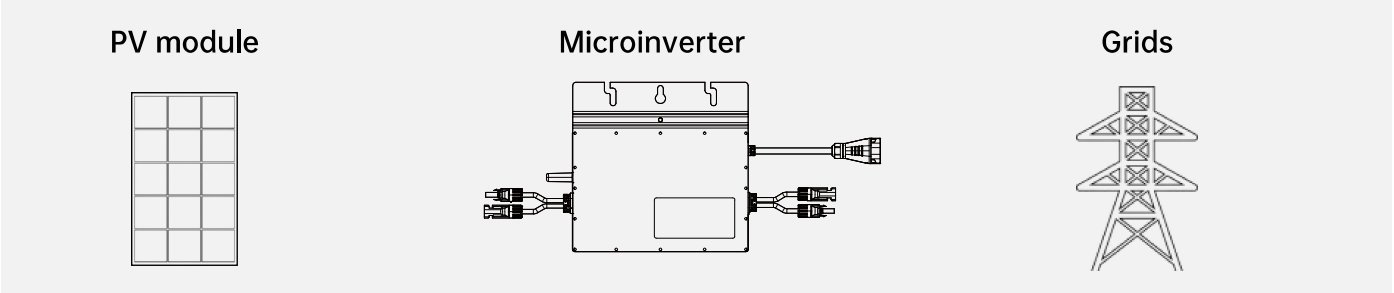

Single Microinverter Connection Diagram

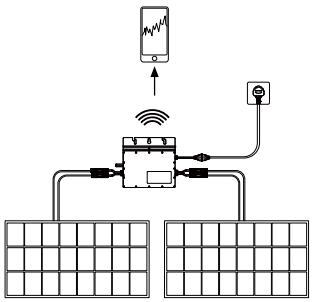

Multiple Microinverter Connection Diagram

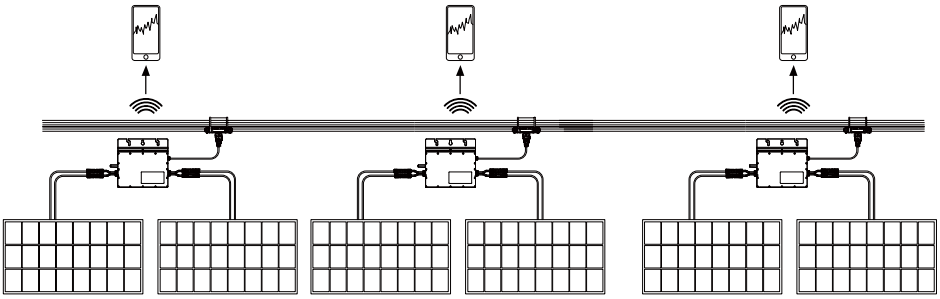

2.2 Microinverter Overview

The microinverter tracks the maximum power point of the PV module.
When one PV module fails or is shaded, the other modules are not affected.
Microinverters monitor current, voltage and power for module-level data monitoring.
Microinverters are low voltage DC, avoiding the safety risks associated with high voltage DC.
Microinverters can be installed according to the number of PV modules, easy installation.
The microinverter housing is IP67 rated and designed for outdoor installation.

2.3 Functionality

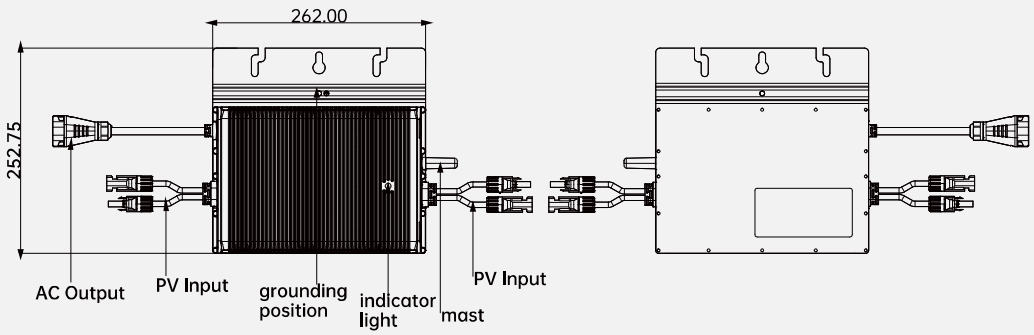

2.4 System monitoring

The microinverter is connected to the Internet through a broadband router, and after following the operating instructions to connect to the system platform, the platform will display current and historical performance trends and informs the status of the PV system in real time.

3. Installation

3.1 Installation requirements

The installation must disconnect the equipment from the grid and isolate the PV modules.
Ensure that environmental conditions are appropriate (temperature, humidity, altitude, etc.).
Avoid direct sunlight to prevent power reduction due to increased internal temperature.
Keep the inverter away from gas or flammable materials.
Avoid electromagnetic interference, which can affect the operation of the equipment.
Keep the heat sink mounted 20+ cm from other objects to maintain ventilation.

*If you want to check the solar system and put it into operation immediately, assemble it in sunny weather.
*We recommend that at least three people work together during assembly or disassembly.

3.2 Installation position

Microinverters can be used in combination with PV modules on roofs, balconies, gardens, and terraces. Select a suitable location before installing a microinverter.

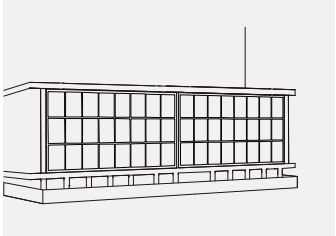
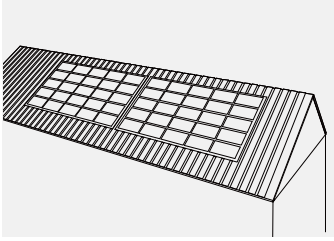
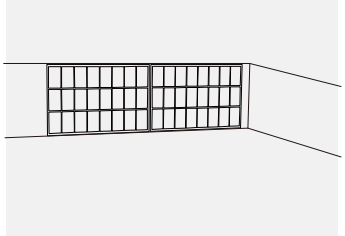
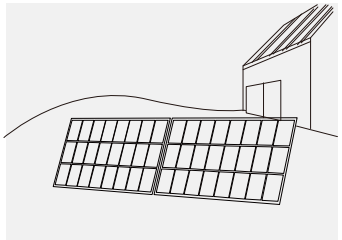

3.3 Installation methods

Fixed horizontally on the solar racking

Product is secured to the stand, keeping it parallel, with the back facing down to keep it ventilated.

Fixed to the wall

Heatsinks face outward for ventilation.

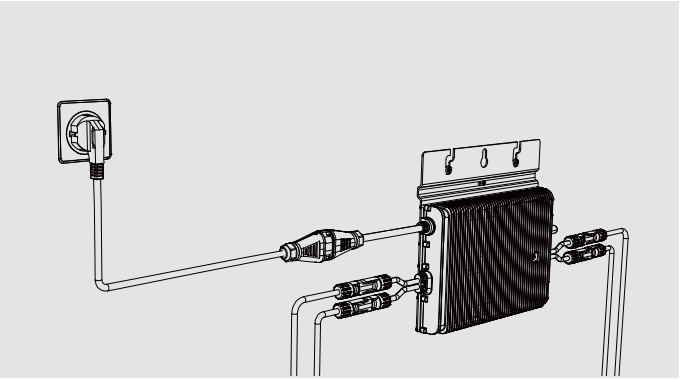

Fixed vertically on the solar racking

Stay perpendicular to the PV module.

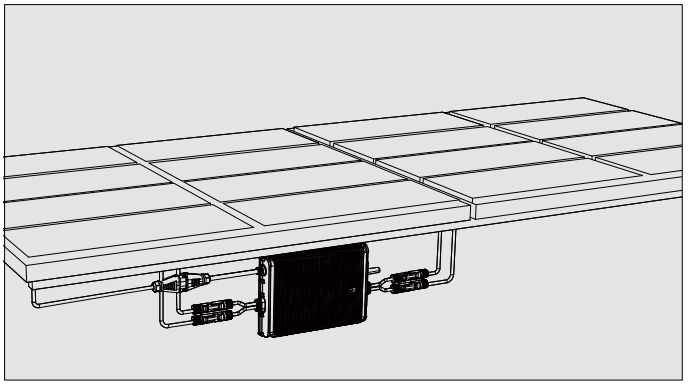

3.4 Installation steps

The following section details several key steps in installing a microinverter

Step 1-Determine the installation location
Step 2-Place the Microinverter
Step 3-Fix the Microinverter
Step 4-Connect the power cable
Step 5-Connect to the mains
Step 6-Connect the PV module

Step 1-Determine the installation location

Choose a cool place and a place where water is not likely to accumulate, and fix the screws to the PV rail or wall.

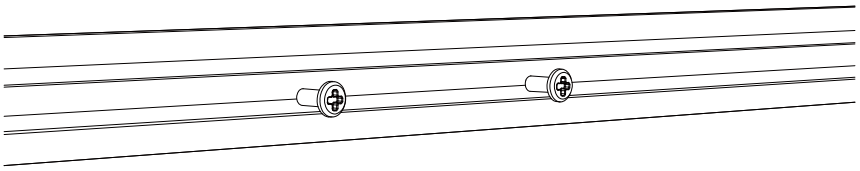

Step 2-Place the Microinverter

Hooking up the microinverter to the screws

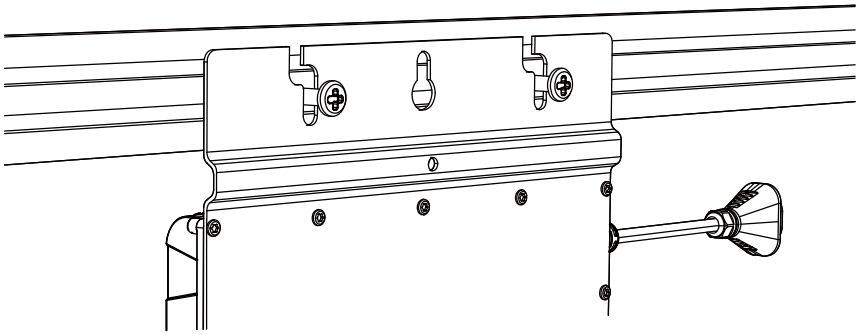

Step 3-Fix the Microinverter

Tighten the screws to secure the microinverter

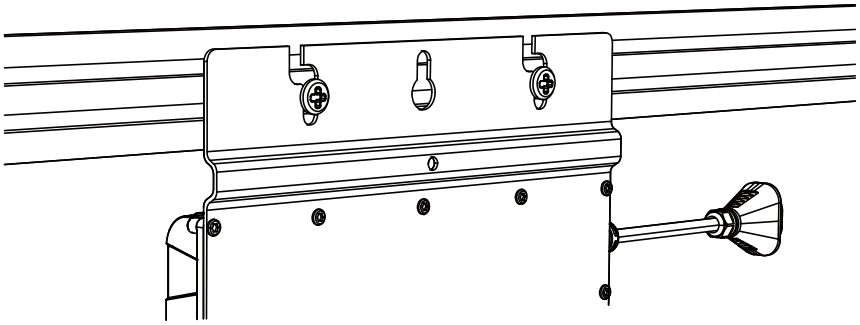

Step 4-Connect the power cable

Connect the microinverter AC output connector to the AC power cord.

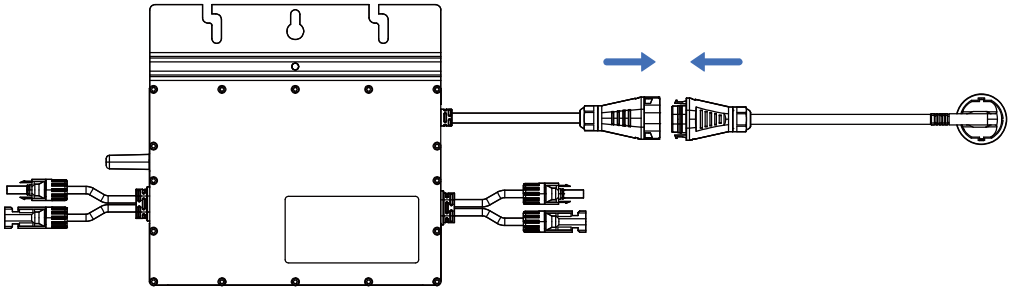

Step 5-Connect to the mains

Connecting AC power to the home mains connection

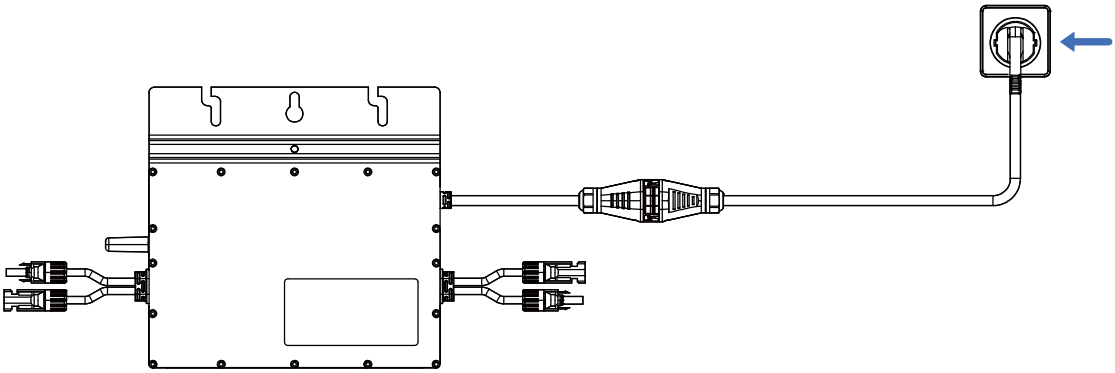

Step 6-Connect the PV module

Connect 1 or 2 groups of PVs to the MC4 interface

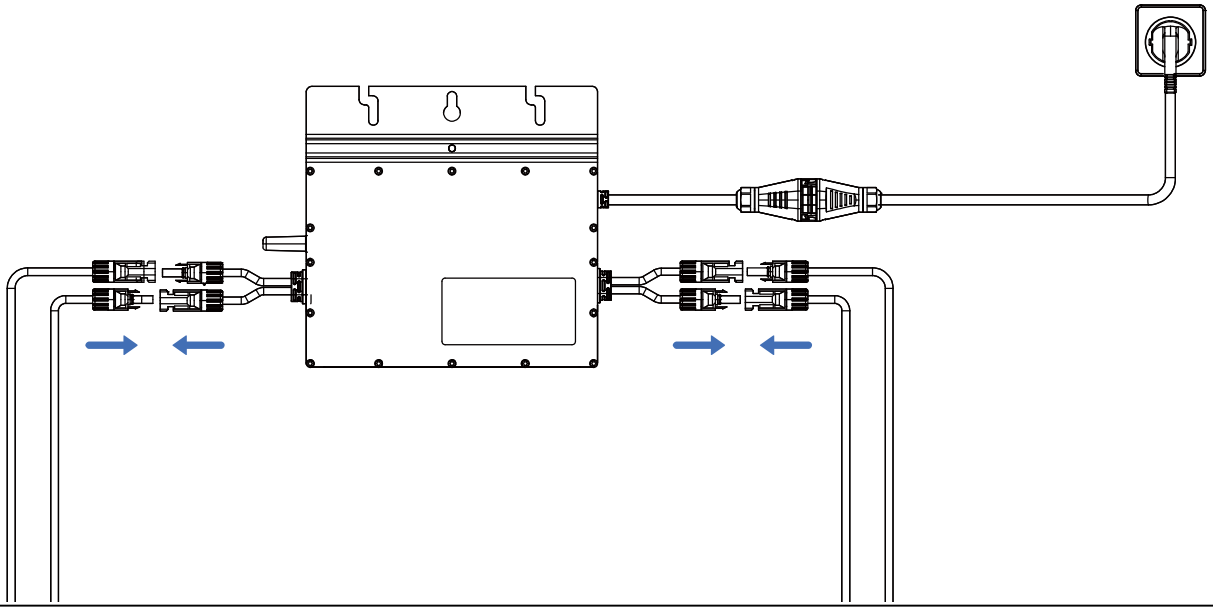

3.5 wiring diagram

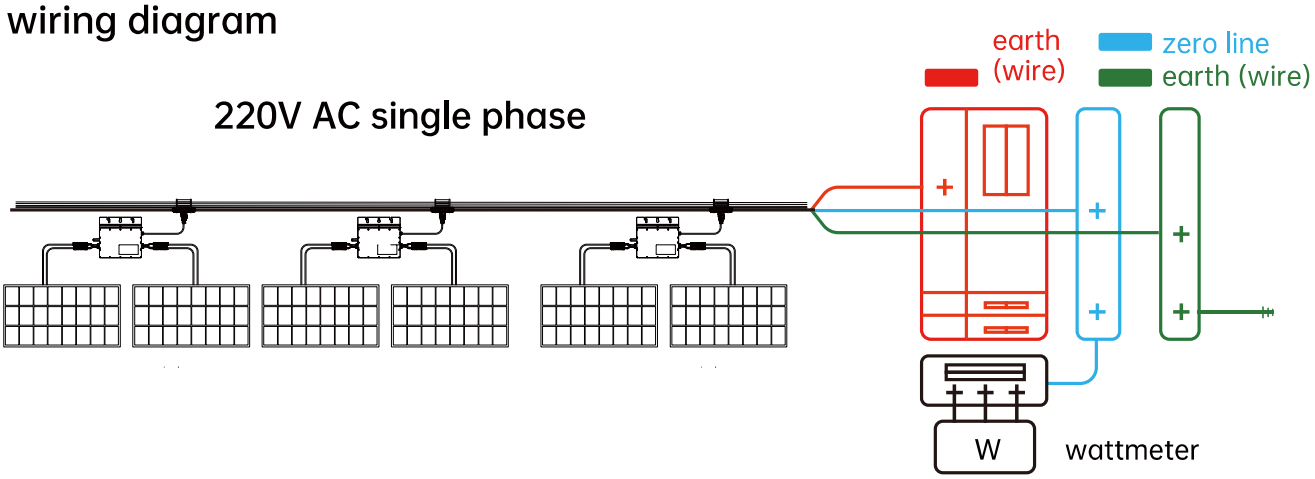

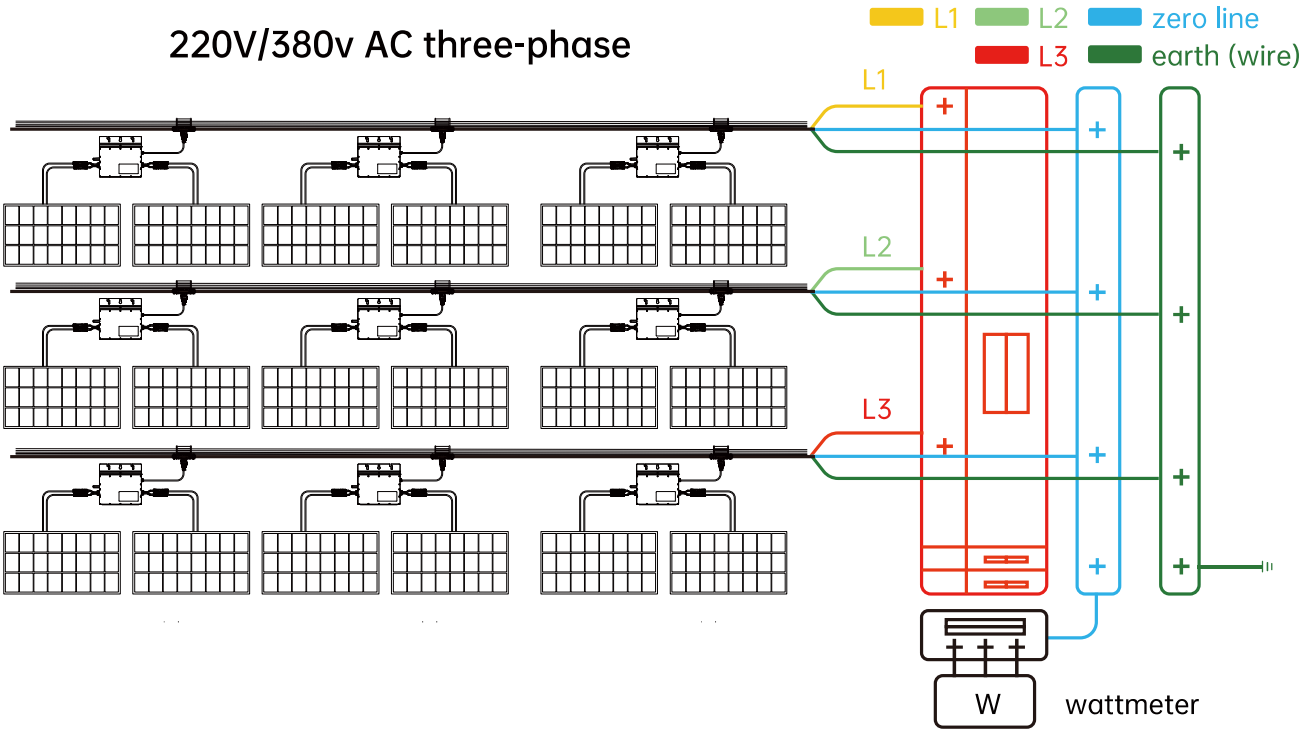

4. APP

4.1 Download APP

Search "Smart Life" in major app shops or scan the QR code below to download "Smart Life".

Download on the App Store

GET IT ON Google Play

Get it from Microsoft

4.2 Registration of accounts

1, Click Sign Up to read and agree to the User Agreement and Privacy Policy and go to the Register page.

2, Register an account. the State/Region is specified automatically or you can change it manually. However, the value of this field cannot be changed after registering an account. click Get Verification Code.

3, Enter the verification code received and go to the password setting page, set the password as required and click Done.

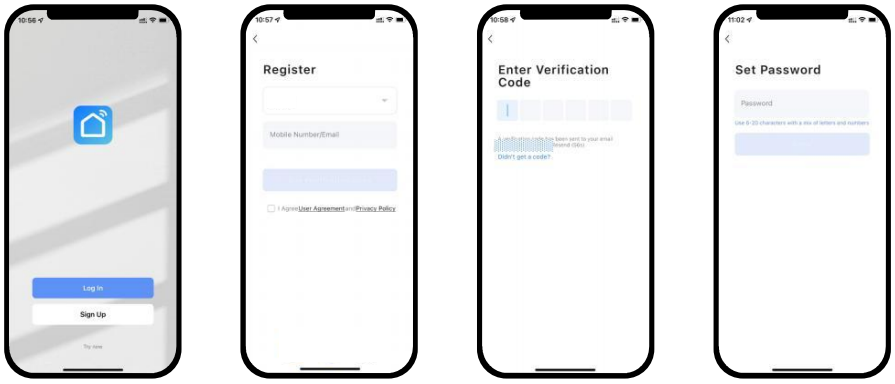

4.3 Connecting the microinverter

1, open the Smart Life APP, the microinverter Add button will pop up automatically, click Add to start connecting the microinverter. If the Microinverter Add button does not pop up automatically, you need to manually click the Add Devise button to search for nearby devices and enter into the distribution mode.

2, follow the prompts to enter the Wi-Fi account and password, click Next button when finished, wait for a few minutes, the microinverter completed the network.

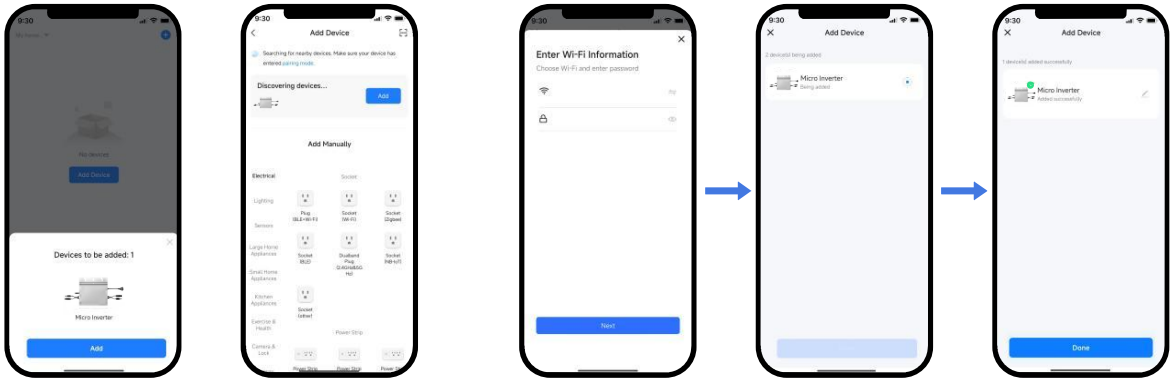

4.4 Reset APP

A) Unplug and reconnect the MC4 connector to which the PV module is connected.

B) Plug and unplug the AC connector 3 times or the switched outlet 3 times within 20 seconds.

C) Microinverter indicator light changes to flashing green.

D) Open APP to search for the device, click Connect to indicate successful reset.

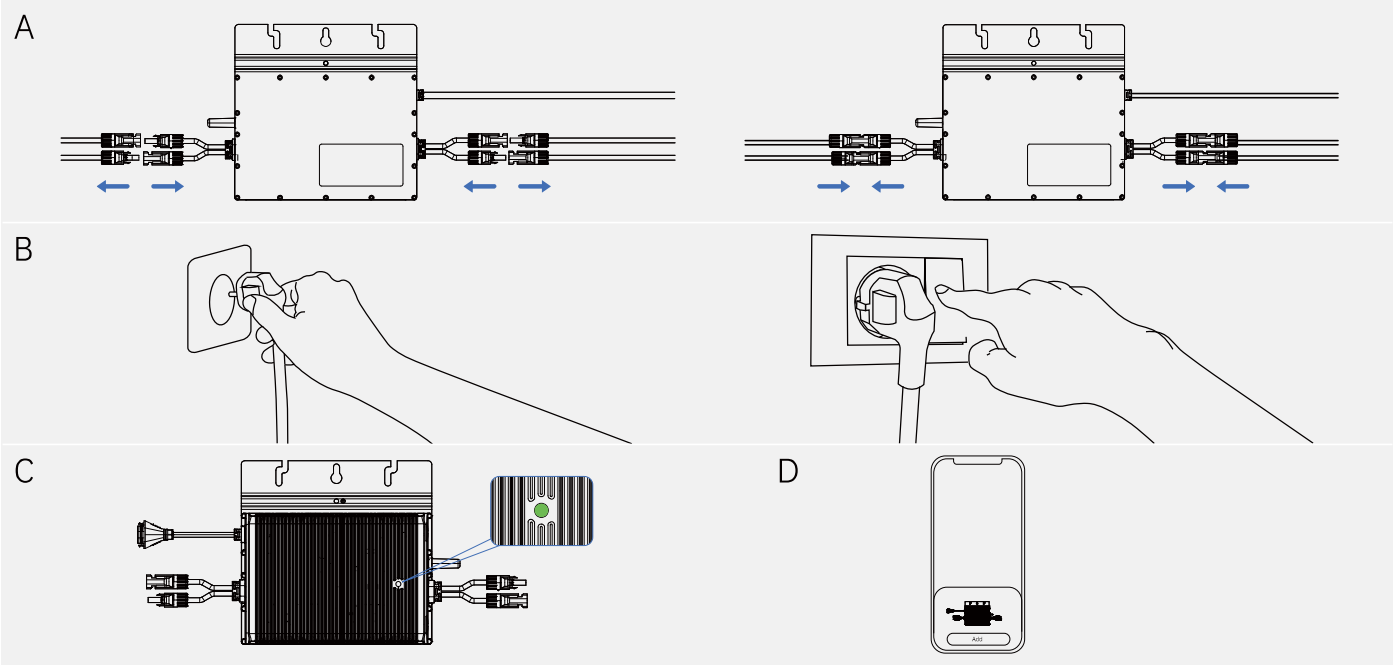

4.5 Indicator status

Indicator light is not on	The device is not started, not connected to the pv terminal or the pv has no power.
Red light blinking	Fault display
Red light is on for a long time	Microinverter is not connected to the mains / Device APP Close
Green light is blinking	Microinverter sends out signal to connect to cell phone
Green light is always on	Microinverter is functioning normally

4.6 Troubleshooting

Type of error	Error code	Recommendations for handling
Solar panel	PV high voltage protection	1) Ensure that the open circuit voltage of the PV module is less than or equal to the maximum input voltage. 2) If the open-circuit voltage of the PV module is within the normal range, please contact your dealer.
	PV low voltage protection	1) Make sure that the open circuit voltage of the PV module is not lower than the maximum input voltage. 2) If the open-circuit voltage of the PV module is normal, please contact your dealer.
Microinverter	Offline	1) Ensure that the microinverter is working properly (check that the DC voltage is within the normal range). 2) Verify that the SN on the microinverter label is the same as that on the monitoring platform. 3) If the alarm is frequent and cannot be recovered, please contact your dealer.
	High temperature derating reminder	1) Check the ventilation and temperature of the location where the microinverter is installed. 2) If the ventilation is poor or the temperature is too high, improve ventilation and heat dissipation. 3) If the problem persists, contact your dealer.
	Microinverter over-temperature protection	1) Check the ventilation and temperature of the location where the microinverter is installed. 2) If the ventilation is poor or the temperature is too high, improve ventilation and heat dissipation. 3) If the problem persists, contact your dealer.
Grids	Utility low frequency protection	1) The alarm may occur occasionally because the grid frequency is not normal for a while, and the microinverter will automatically recover after the grid frequency returns to normal. The microinverter will recover automatically when the grid frequency returns to normal. 2) If the alarm occurs frequently, please check whether the grid frequency is within the acceptable range. 3) If not, please contact your dealer.
	Utility high frequency protection	1) Occasional alarms may be due to temporary abnormalities in the grid frequency, the microinverter will automatically recover after the grid frequency is restored. 2) If the alarm occurs frequently, please check whether the grid frequency is within the acceptable range. 3) If not, please contact your dealer.
	High mains voltage protection	1) When the alarm occurs occasionally, it may be due to a temporary irregularity in the grid voltage. The microinverter will automatically resume when the grid voltage returns to normal. 2) If the alarm occurs frequently, please check if the grid voltage is within the acceptable range. 3) If not, please contact your dealer.
	Low mains voltage protection	1) Alarms occurring occasionally may be due to temporary abnormalities in the grid voltage, the microinverter will automatically recover when the voltage returns to normal. 2) If the alarm occurs frequently, please check if the grid voltage is within the acceptable range. 3) If not, please contact your dealer.
	Grid outages/ disconnections	Please check the AC switch, branch circuit breaker and AC wiring for proper function.
	Islanding protection	1) Occasional alarms may be due to temporary abnormalities in the grid frequency, and the microinverter will automatically recover when the voltage is restored. 2) If all microinverters alarm frequently, please contact your local power operator to check the grid islanding problem. 3) If the alarm persists or only a few microinverters are affected, please contact your dealer.
		1) Check if the power cord is connected to the home utility. 2) Check to make sure the power cord is not broken or damaged.

5. Data sheet

Nations	
Model	**SPD-800**
Input Data(DC)	
Recommended solar panel input power	275-530W× 2
Number of DC input connections	MC4 × 2
Max. input voltage	60V
PV Operating voltage	16-60V
Start-up voltage	22V
MPPT tracking range	22-55V
MPPT tracking accuracy	>99.5%
Max. continuous input current	14A × 2
Output Data(AC)	
Max. continuous output power	800W
Nominal output voltage	230V
Operating voltage range	190-270V
Max. continuous output current	3.47A
Nominal output frequency	50Hz
Output frequency range	47.5-53.5Hz
Maximum units per branch	230VAC: 10set
THD	<5%
Power factor	>0.99
Peak efficiency	96%
Protective class	Class I
Protection Function	
Over/under voltage protection	Yes
Over/under frequency protection	Yes
Anti-islanding protection	Yes
Over temperature protection	Yes
Type of enclosure	IP67
Operating ambient temp.	-40℃ to +65℃
Indication light quantity	Working status: Led light + Wi-Fi Signal Led light
Communication connection mode	Wi-Fi / 2.4G
Cooling method	Natural cooling(no fan)
Working environment	Indoor and Outdoor
Environment altitude	≤2000m
Weight	3.5Kg
Size (L*W*H)	262mm*38mm*252.8mm
Warranty	10 Years
Compliance	
EN IEC 61000-6-2: 2019\EN IEC 61000-6-4: 2019\EN IEC 61000-3-2:2019/A1: 2021\EN 61000-3-3:2013/A2: 2021\IEC 62109-1 :2010\EN 62109-1: 2010\IEC 62109-2:2011\EN 62109-2:2011\IEC 62321-3-1:2013;IEC 62321-4:2013+AMD1:2017;\IEC 62321-5:2013;IEC 62321-7-1:2015\IEC 62321-7-2:2017;IEC 62321-6: 2015\IEC 62321-8:2017\IEC60529:1989 A1:1999 A2:2013\VDE-AR-N 4105:2018\VDE V 0126-1-1:2013\VDE V 0124-100:2020\ETSI EN 301 489-1 V2.2.3:2019\ ETSI EN 301 489-17 V3.2.4:2020\ETSI EN 300 328 V2.2.2:2019\EN 50665:2017\EN IEC 62311:2020	

6. Purchase accessories separately

6.1 List of additional accessories and tools purchased

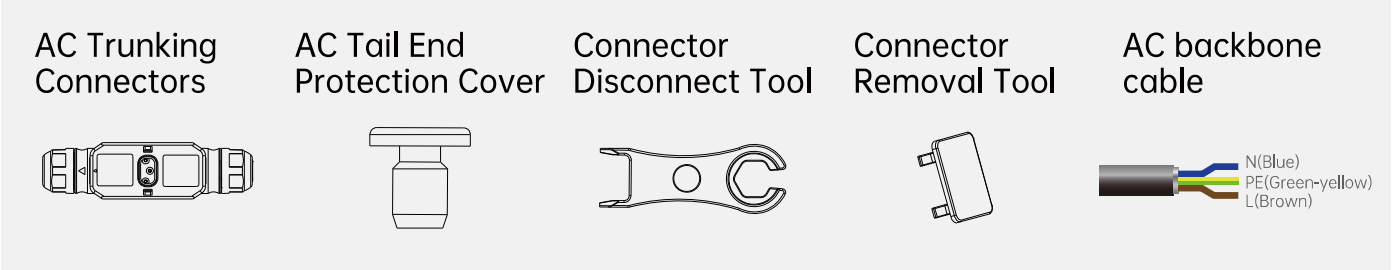

Note: All the above accessories are not included in the product set, please contact your local dealer to purchase them separately.

6.2 Parallel cable laying

1, Select the appropriate AC bus based on the microinverter spacing. The spacing of the AC bus connectors should be close to the spacing between the microinverters to ensure a good match between the two.
2, Determine the number of microinverters to be installed on each AC branch line and prepare the appropriate AC bus.
3. Remove as many sections of AC bus as necessary to make the AC cables for each branch.
4. Once the cables have been laid, install the microinverters as described in Chapter 3 of this manual.

Unlock the top cover of the port and loosen the screws with a screwdriver.	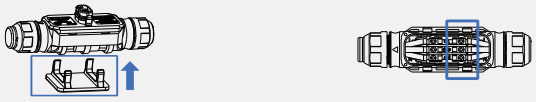
Prepare a length of AC cable of suitable length and strip the end of the insulating sheath as required as shown in the diagram to the right.	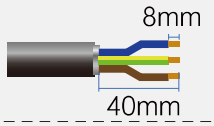
Insert the cable into the cover and make sure that the fire wire L, the zero wire N and the ground wire PE are crimped in the respective slots.	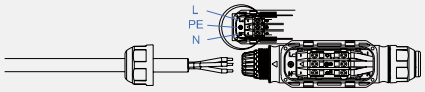
Use a torque of 0.4±0.1N.m to tighten the screw. Install the nut back into the port and tighten the nut using a torque of 0.4±0.1.	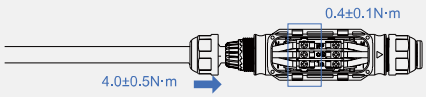
If the cable is connected to the other side of the connector, repeat the above steps. If no cable is connected to the other side of the connector, insert the end protection cap and tighten the nut.	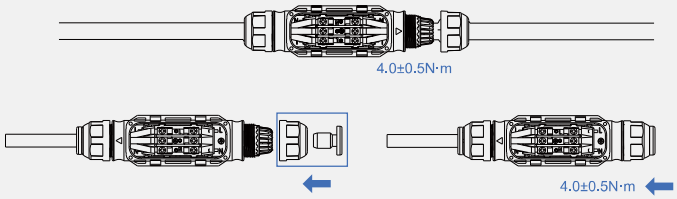
Insert the top cover back into the bus connector.	
Arrange the AC bus on the laying rails and secure it with cable ties.	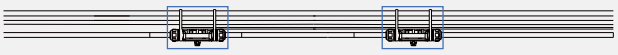

FCC Statement

This device complies with part 15 of the FCC Rules. Operation is subject to the following two conditions: (1) This device may not cause harmful interference, and (2) this device must accept any interference received, including interference that may cause undesired operation.

Note: This equipment has been tested and found to comply with the limits for a Class B digital device, pursuant to part 15 of the FCC Rules. These limits are designed to provide reasonable protection against harmful interference in a residential installation. This equipment generates, uses and can radiate radio frequency energy and, if not installed and used in accordance with the instructions, may cause harmful interference to radio communications. However, there is no guarantee that interference will not occur in a particular installation. If this equipment does cause harmful interference to radio or television reception, which can be determined by turning the equipment off and on, the user is encouraged to try to correct the interference by one or more of the following measures:

—Reorient or relocate the receiving antenna.

—Increase the separation between the equipment and receiver.

—Connect the equipment into an outlet on a circuit different from that to which the receiver is connected.

—Consult the dealer or an experienced radio/TV technician for help.

Note: The Grantee is not responsible for any changes or modifications not expressly approved by the party responsible for compliance. such modifications could void the user's authority to operate the equipment.

The device has been evaluated to meet general RF exposure requirement.

To maintain compliance with FCC's RF exposure guidelines, the distance must be at least 20 cm between the radiator and your body, and fully supported by the operating and installation configurations of the transmitter and its antenna(s).