# TEST REPORT

| | |
|---|---|
| Product Name: | Magnetic Power Bank |
| FCC ID: | 2BLV2-REGNT16X |
| Trademark: | N/A |
| Model Number: | RE-GNT16X, RE-T16A |
| Prepared For: | CHONGZHENG(HK)CO.,LIMITED |
| Address: | RM A07,1701-02 NEW TREND CENTRE, 704 PRINCE EDWARD ROAD EAST, SAN PO KONG KLN |
| Manufacturer: | CHONGZHENG(HK)CO.,LIMITED |
| Address: | RM A07,1701-02 NEW TREND CENTRE, 704 PRINCE EDWARD ROAD EAST, SAN PO KONG KLN |
| Prepared By: | Shenzhen CTB Testing Technology Co., Ltd. |
| Address: | 1&2/F., Building A, No.26, Xinhe Road, Xinqiao, Xinqiao Street, Bao'an District, Shenzhen, Guangdong, China |
| Sample Received Date: | Sep. 25, 2024 |
| Sample tested Date: | Sep. 25, 2024 to Nov. 04, 2024 |
| Issue Date: | Nov. 04, 2024 |
| Report No.: | CTB241012002RF |
| Test Standards | FCC Part 15 C |
| Test Results | PASS |
| Remark: | This is wireless charger radio test report. |

| Compiled by: | Reviewed by: | Approved by: |
|---|---|---|
| Zhou Kui | Arron Liu | Bin Mei |
| ZhouKui | Arron Liu | Bin Mei / Director |

Note: If there is any objection to the inspection results in this report, please submit a written report to the company within 15 days from the date of receiving the report. The test report is effective only with both signature and specialized stamp. This result(s) shown in this report refer only to the sample(s) tested. Without written approval of Shenzhen CTB Testing Technology Co., Ltd. this report can't be reproduced except in full. The tested sample(s) and the sample information are provided by the client. "*" indicates the testing items were fulfilled by subcontracted lab. "#" indicates the items are not in CNAS accreditation scope.

## TABLE OF CONTENTS

**1. GENERAL INFORMATION ..... 3**
1.1. Report information ..... 3
1.2. Measurement Uncertainty ..... 3
1.3. Test Facility ..... 3
1.4. Test Uncertainty ..... 4
**2. PRODUCT DESCRIPTION ..... 5**
2.1. EUT Description ..... 5
2.2. Block Diagram of EUT Configuration ..... 5
2.3. Test Conditions ..... 5
2.4. DescriptionOfSupport Units (Conducted Mode) ..... 6
**3. TEST RESULTS SUMMARY ..... 6**
**4. TEST EQUIPMENT USED ..... 7**
4.1. MEASUREMENT INSTRUMENTS LIST ..... 7
**5. CONDUCTED EMISSION TEST ..... 9**
5.1. Block Diagram of Test Setup ..... 9
5.2. Test Standard ..... 9
5.3. Conducted Emission Limit ..... 9
5.4. EUT Configuration on Test ..... 9
5.5. Operating Condition of EUT ..... 10
5.6. Test Procedure ..... 10
5.7. Test Result ..... 10
**6. RADIATED EMISSION MEASUREMENT ..... 13**
6.1. Block Diagram of Test Setup ..... 13
6.2. Test Standard ..... 14
6.3. EMI Test Receiver Setup ..... 14
6.4. Test Procedure ..... 14
6.5. Test Result ..... 14
**7. OCCUPIED BANDWIDTH ..... 18**
7.1. Block Diagram of Test Setup ..... 18
7.2. Rules and specifications ..... 18
7.3. Test Procedure ..... 18
7.4. Test Result ..... 18
**8. EUT TEST PHOTOS ..... 20**

# 1. GENERAL INFORMATION

## 1.1. Report information

1.1.1. This report is not a certificate of quality; it only applies to the sample of the specific product/equipment given at the time of its testing. The results are not used to indicate or imply that they are application to the similar items. In addition, such results must not be used to indicate or imply that CTB approves recommends or endorses the manufacture, supplier or use of such product/equipment, or that CTB in any way guarantees the later performance of the product/equipment.

1.1.2. The sample/s mentioned in this report is/are supplied by Applicant, CTB therefore assumes no responsibility for the accuracy of information on the brand name, model number, origin of manufacture or any information supplied.

1.1.3. Additional copies of the report are available to the Applicant at an additional fee. No third part can obtain a copy of this report through CTB, unless the applicant has authorized CTB in writing to do so.

## 1.2. Measurement Uncertainty

Available upon request.

## 1.3. Test Facility

Site Description

| | | |
|---|---|---|
| Name of Firm | : | Shenzhen CTB Testing Technology Co., Ltd. |
| Site Location | : | 1&2/F., Building A, No.26, Xinhe Road, Xinqiao, Xinqiao Street, Bao'an District, Shenzhen, Guangdong, China |

1.4. Test Uncertainty

| Item | Uncertainty |
|---|---|
| Occupancy bandwidth | 54.3kHz |
| Conducted output power Above 1G | 0.9dB |
| Conducted output power below 1G | 0.9dB |
| Power Spectral Density , Conduction | 0.9dB |
| Conduction spurious emissions | 2.0dB |
| Out of band emission | 2.0dB |
| 3m camber Radiated spurious emission(9KHz-30MHz) | 3m camber Radiated spurious emission(9KHz-30MHz) |
| 3m camber Radiated spurious emission(30MHz-1GHz) | 3m camber Radiated spurious emission(30MHz-1GHz) |
| 3m chamber Radiated spurious emission(1GHz-18GHz) | 3m chamber Radiated spurious emission(1GHz-18GHz) |
| 3m chamber Radiated spurious emission(18GHz-40GHz) | 3m chamber Radiated spurious emission(18GHz-40GHz) |
| humidity uncertainty | 5.5% |
| Temperature uncertainty | 0.63℃ |
| frequency | 1×10-7 |
| Conducted Emission (150KHz-30MHz) | 3.2 dB |
| Radiated Emission(30MHz ~ 1000MHz) | 4.8 dB |
| Radiated Emission(1GHz ~6GHz) | 4.9 dB |

## 2. PRODUCT DESCRIPTION

### 2.1. EUT Description

| | | |
|---|---|---|
| Description | : | Magnetic Power Bank |
| Model Number | : | RE-GNT16X |
| Serial Model | : | RE-T16A |
| Model Difference | : | All the model are the same circuit and RF module, only the exterior color is different. Test sample model: RE-GNT16X |
| Power Supply | | Capacity:10000mAh 3.85V/38.5Wh<br>Type-C Input: 5V ⎓ 3A, 9V ⎓ 2A, 12V ⎓ 1.5A<br>Type-C Line Input: 5V ⎓ 3A, 9V ⎓ 2A, 12V ⎓ 1.5A<br>USB Output: 5V ⎓ 3A, 9V ⎓ 2A ,10V ⎓ 2.25A, 12V ⎓ 1.5A<br>Type-C Output: 5V ⎓ 3A, 9V ⎓ 2.22A, 12V ⎓ 1.67A<br>Type-C Line Output: 5V ⎓ 3A, 9V ⎓ 2.22A, 10V ⎓ 2.25A, 12V ⎓ 1.5A |
| MAX wireless charger power | | Wireless Charger: 5W/7.5W/10W/15W(Max) |
| Work Frequency | : | 110-205KHz |

### 2.2. Block Diagram of EUT Configuration

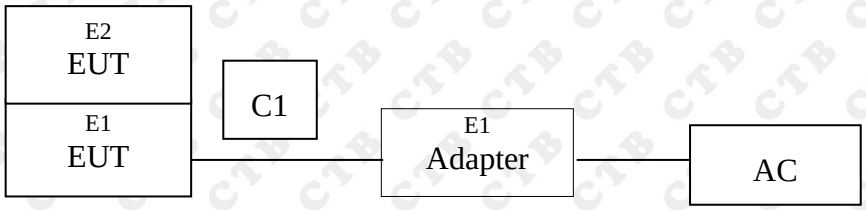


### 2.3. Test Conditions

Temperature: 23~25℃

Relative Humidity: 50~63 %

### 2.4. DescriptionOfSupport Units (Conducted Mode)

The EUT has been tested as an independent unit together with other necessary accessories or support units. The following support units or accessories were used to form a representative test configuration during the tests.

| Item | Equipment | Mfr/Brand | Model/Type No. | Series No. | Note |
|---|---|---|---|---|---|
| E1 | Wireless charging tester | YBZ | M1 | / | AE |
| E1 | Adapter | JIYIN | JY-05100C | / | AE |
| | | | | | |

| Item | Shielded Type | Ferrite Core | Length | Note |
|---|---|---|---|---|
| | | | | |
| | | | | |
| | | | | |

Note:

(1) The support equipment was authorized by Declaration of Confirmation.
(2) For detachable type I/O cable should be specified the length in cm in『Length』column.
(3) "YES" is means "shielded" "with core"; "NO" is means "unshielded" "without core".

## 3. TEST RESULTS SUMMARY

**Table 1 Test Results Summary**

| Section | Test Items | Test Results |
|---|---|---|
| 15.207 | Conducted disturbance | Pass |
| 15.209(a)(f) | Radiated disturbance | Pass |
| 15.215 | 20 d B Bandwidth | Pass |

Remark: "N/A" means "Not applicable."

## 4. TEST EQUIPMENT USED

### 4.1. MEASUREMENT INSTRUMENTS LIST

| No. | Equipment | Manufacturer | Type No. | Serial No. | Firmware Version | Calibrated until |
|---|---|---|---|---|---|---|
| 1 | Spectrum Analyzer | Agilent | N9020A | MY52090073 | A.14.16 | 2025/6/28 |
| 2 | Power Sensor | Agilent | U2021XA | MY56120032 | / | 2025/6/28 |
| 3 | Power Sensor | Agilent | U2021XA | MY56120034 | / | 2025/6/28 |
| 4 | Communication test set | R&S | CMW500 | 108058 | V3.5.80 | 2025/6/28 |
| 5 | Spectrum Analyzer | KEYSIGHT | N9020A | MY51289897 | A.14.16 | 2025/6/28 |
| 6 | Signal Generator | Agilent | N5181A | MY50140365 | A.01.60 | 2025/6/28 |
| 7 | Vector signal generator | Agilent | N5182A | MY47420195 | A.01.87 | 2025/6/28 |
| 8 | Communication test set | Agilent | E5515C | MY50102567 | B.19.07 (E1962B) | 2025/6/28 |
| 9 | 2.4 GHz Filter | Shenxiang | MSF2400-2483.5MS-1154 | 20181015001 | / | 2025/6/30 |
| 10 | 5 GHz Filter | Shenxiang | MSF5150-5850MS-1155 | 20181015001 | / | 2025/6/30 |
| 11 | Filter | Xingbo | XBLBQ-DZA120 | 190821-1-1 | / | 2025/6/30 |
| 12 | BT&WI-FI Automatic test software | Micowave | MTS8310 | Ver. 2.0.0.0 | / | / |
| 13 | Rohde & Schwarz SFU Broadcast Test System | R&S | SFU | 101017 | / | 2025/6/28 |
| 14 | Temperature humidity chamber | Hongjing | TH-80CH | DG-15174 | / | 2025/6/28 |
| 15 | 234G Automatic test software | Micowave | MTS8200 | Ver. 2.0.0.0 | / | / |
| 16 | 966 chamber | C.R.T. | 966 | / | / | 2027/6/21 |
| 17 | Receiver | R&S | ESPI | 100362 | RF_ATTEN_7 (104489/003) | 2025/6/28 |
| 18 | Amplifier | HP | 8447E | 2945A02747 | / | 2025/6/28 |
| 19 | Amplifier | Agilent | 8449B | 3008A01838 | / | 2025/6/28 |
| 20 | TRILOG Broadband Antenna | Schwarzbeck | VULB 9168 | 00869 | / | 2025/6/28 |
| 21 | Double Ridged Broadband Horn Antenna | Schwarzbeck | BBHA9120D | 01911 | / | 2025/6/28 |
| 22 | EMI test software | Fala | EZ-EMC | FA-03A2 RE | / | / |
| 23 | Loop Antenna | Schwarzbeck | FMZB 1519B | 1519B-224 | / | 2025/6/28 |
| 24 | loop antenna | ZHINAN | ZN30900A | GTS534 | / | / |
| 25 | 40G Horn antenna | A/H/System | SAS-574 | 588 | / | 2025/6/28 |
| 26 | Amplifier | AEROFLEX | Aeroflex | 097 | / | 2025/6/28 |
| 27 | Power Metter | KEYSIGHT | N1912AP | N/A | A.05.00 | 2025/6/28 |

| Continuous disturbance | | | | | | |
|---|---|---|---|---|---|---|
| No. | Equipment | Manufacturer | Model No. | Serial No. | Firmware version | Calibrated until |
| 1 | 843 Shield Room | C/ R/ T | 843 | / | / | 2027/6/21 |
| 2 | AMN | ROHDE&SCHWARZ | ESH3-Z5 | 831551852 | / | 2025/6/30 |
| 3 | Pulse limiter | ROHDE&SCHWARZ | ESH3Z2 | 357881052 | / | 2025/6/28 |
| 4 | EMI TEST RECEIVER | ROHDE&SCHWARZ | ESCI | 100428 | V4.42.SP3 | 2025/6/30 |
| 5 | Coaxial cable | ZDECL | Z302S | 18091904 | / | 2025/6/30 |
| 6 | ISN | Schwarzbeck | NTFM8158 | 183 | / | 2025/6/30 |
| 7 | Voltage sensor | Schwarzbeck | TK 9420 | 01189 | / | 2024/11/16 |
| 8 | EZ-EMC | Frad | EMC-con3A1.1 | / | / | / |
| 9 | Current Probe | FCC | F-52B | 199453 | / | 2025/5/27 |
| 10 | Communication test set | R&S | CMW500 | 108058 | B.19.07 (E1962B) | 2025/6/28 |
| 11 | Communication test set | Agilent | E5515C | MY50102567 | V3.5.80 | 2025/6/28 |

| Radiated emission(No.2 Chamber) | | | | | | |
|---|---|---|---|---|---|---|
| No. | Equipment | Manufacturer | Model No. | Serial No. | Firmware version | Calibrated until |
| 1 | 966 Chamber | C/ R/ T | 966 | / | / | 2026/11/14 |
| 2 | Double Ridged Broadband Horn Antenna | Schwarzbeck | BBHA 9120 D | 01911 | / | 2026/7/07 |
| 3 | Broadband Antenna | Schwarzbeck | VULB 9168 | 1471 | / | 2025/7/06 |
| 4 | Amplifier | Agilent | 8449B | 3008A01838 | / | 2025/6/30 |
| 5 | Preamplifier | Schwarzbeck | BBV 9743 B | 00500 | / | 2025/5/23 |
| 6 | EMI TEST RECEIVER | R&S | ESCI7 | 100861 | / | 2024/11/27 |
| 7 | Spectrum Analyzer | KEYSIGHT | N9020A | MY51289897 | A.14.16 | 2025/6/28 |
| 8 | EMI test software | Farad | EZ-EMC | / | Ver. FARAD-3A1+ | / |
| 9 | Coaxial cable | Rosenberg | 8m | / | / | 2024/11/27 |
| 10 | Coaxial cable | Times | 2m | / | / | 2024/11/27 |
| 11 | Coaxial cable | Times | 2m | / | / | 2024/11/27 |
| 12 | Coaxial cable | Times | 1m | / | / | 2024/11/27 |
| 13 | loop antenna | Schwarzbeck | FMZB 1519B | 1519B-224 | / | 2025/6/29 |
| 14 | Communication test set | R&S | CMW500 | 108058 | B.19.07 (E1962B) | 2025/6/28 |
| 15 | Communication test set | Agilent | E5515C | MY50102567 | V3.5.80 | 2025/6/28 |

## 5. CONDUCTED EMISSION TEST

### 5.1. Block Diagram of Test Setup

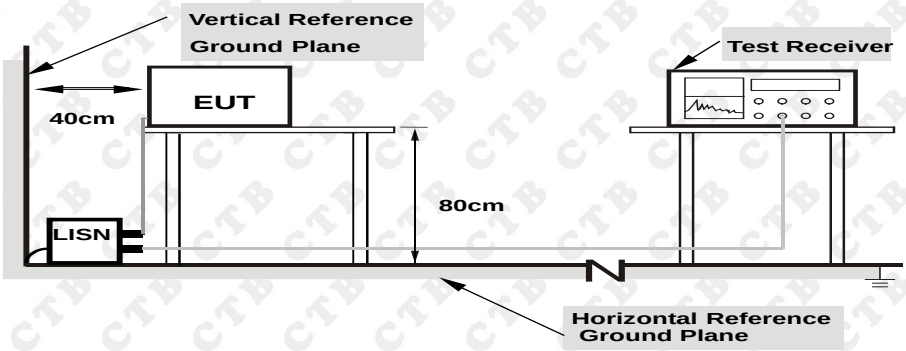


Note: 1.Support units were connected to second LISN.
2.Both of LISNs (AMN) are 80 cm from EUT and at least 80 from other units and other metal planes

The setup of EUT is according with per ANSI C63.10-2013 measurement procedure.
The specification used was with the FCC Part 15.207 limits.

### 5.2. Test Standard

FCC§15.207

### 5.3. Conducted Emission Limit

| Frequency MHz | Limits dB(μV) | |
|---|---|---|
| | Quasi-peak Level | Average Level |
| 0.15 ~ 0.50 | 66 ~ 56* | 56 ~ 46* |
| 0.50 ~ 5.00 | 56 | 46 |
| 5.00 ~ 30.00 | 60 | 50 |

Notes: 1. *Decreasing linearly with logarithm of frequency.

### 5.4. EUT Configuration on Test

The following equipments are installed on conducted emission test to meet FCC Part 15.207 requirement and operating in a manner, which tends to maximize its emission characteristics in a normal application.

## 5.5. Operating Condition of EUT

5.5.1.Setup the EUT and simulators as shown in Section 5.1.

5.5.2.Turn on the power of all equipments.

5.5.3.Let the EUT work in test modes (EUTWorking) and test it.

## 5.6. Test Procedure

The EUT is put on a table of non-conducting material that is 80cm high. The vertical conducting wall of shielding is located 40cm to the rear of the EUT. The power line of the EUT is connected to the AC mains through a Artificial Mains Network (A.M.N.). A EMI test receiver (R&S Test Receiver ESHS30) is used to test the emissions form both sides of AC line. The bandwidth of EMI test receiver is set at 9kHz.

The bandwidth of the test receiver (R&S Test Receiver ESHS30) is set at 10KHz.

We pretest AC 120V and AC 240V, the worst voltage was AC 120V and the data recording in the report.

## 5.7. Test Result

PASS

Please refer to the following pages.

| | | | |
|---|---|---|---|
| Temperature: | 23℃ | Relative Humidity: | 54% |
| Pressure: | 1010hPa | Phase : | L |
| **Test Voltage:** | AC 120V/60Hz | Test Mode: | Normal Link |

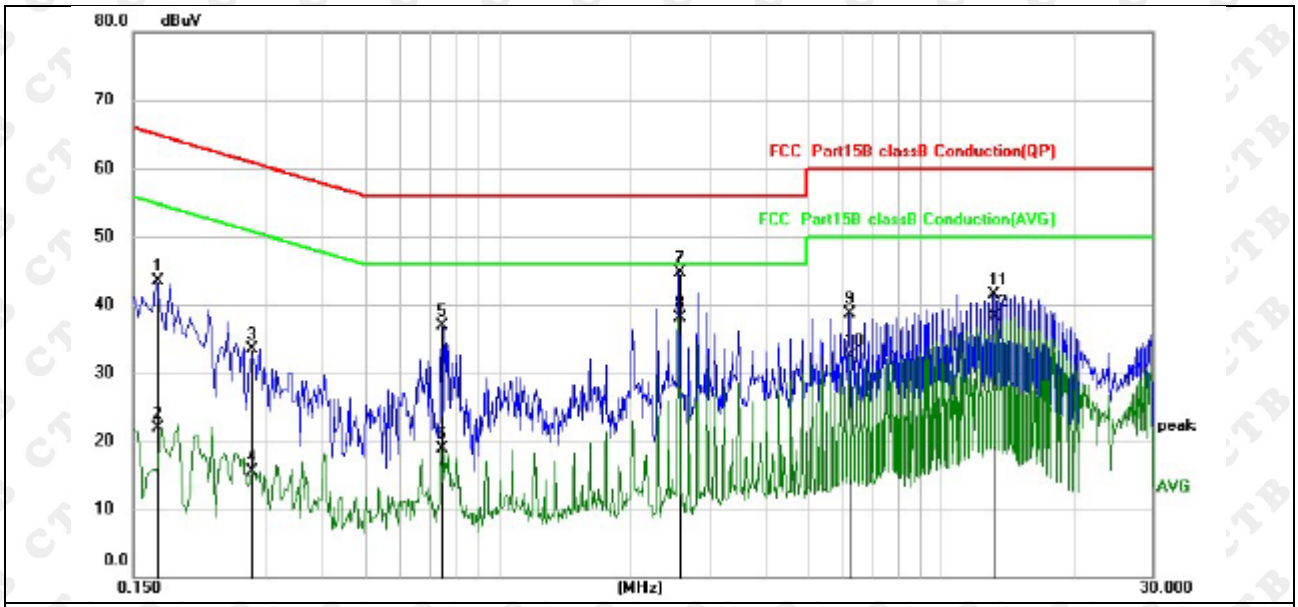


Remark:
1. All readings are Quasi-Peak and Average values.
2. Factor = Insertion Loss + Cable Loss.

| No. | Mk. | Freq. | Reading Level | Correct Factor | Measure-ment | Limit | Over | |
|---|---|---|---|---|---|---|---|---|
| | | MHz | dBuV | dB | dBuV | dBuV | dB | Detector |
| 1 | | 0.1700 | 32.76 | 10.82 | 43.58 | 64.96 | -21.38 | QP |
| 2 | | 0.1700 | 11.03 | 10.82 | 21.85 | 54.96 | -33.11 | AVG |
| 3 | | 0.2788 | 22.88 | 10.65 | 33.53 | 60.85 | -27.32 | QP |
| 4 | | 0.2788 | 4.88 | 10.65 | 15.53 | 50.85 | -35.32 | AVG |
| 5 | | 0.7460 | 26.07 | 10.76 | 36.83 | 56.00 | -19.17 | QP |
| 6 | | 0.7460 | 8.14 | 10.76 | 18.90 | 46.00 | -27.10 | AVG |
| 7 | | 2.5620 | 32.99 | 11.70 | 44.69 | 56.00 | -11.31 | QP |
| 8 | * | 2.5620 | 26.47 | 11.70 | 38.17 | 46.00 | -7.83 | AVG |
| 9 | | 6.2020 | 26.13 | 12.66 | 38.79 | 60.00 | -21.21 | QP |
| 10 | | 6.2020 | 19.87 | 12.66 | 32.53 | 50.00 | -17.47 | AVG |
| 11 | | 13.0820 | 28.22 | 13.30 | 41.52 | 60.00 | -18.48 | QP |
| 12 | | 13.0820 | 25.01 | 13.30 | 38.31 | 50.00 | -11.69 | AVG |

| | | | |
|---|---|---|---|
| Temperature: | 23℃ | Relative Humidity: | 54% |
| Pressure: | 1010hPa | Phase : | N |
| **Test Voltage:** | AC 120V/60Hz | Test Mode: | Normal Link |

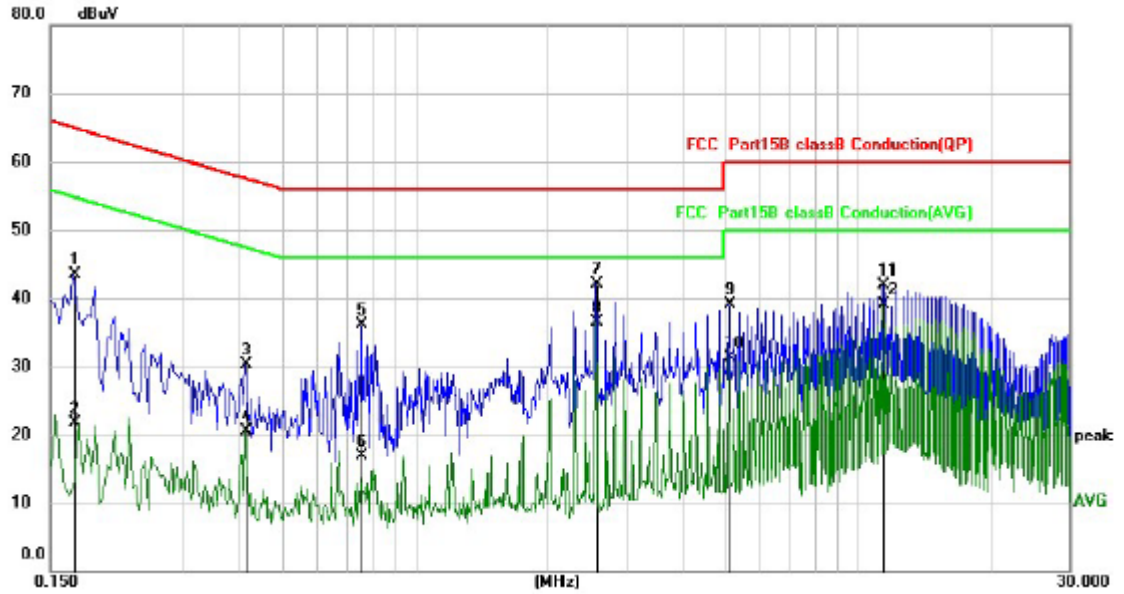


Remark:
1. All readings are Quasi-Peak and Average values.
2. Factor = Insertion Loss + Cable Loss.

| No. | Mk. | Freq. | Reading Level | Correct Factor | Measure-ment | Limit | Over | |
|---|---|---|---|---|---|---|---|---|
| | | MHz | dBuV | dB | dBuV | dBuV | dB | Detector |
| 1 | | 0.1700 | 32.72 | 10.82 | 43.54 | 64.96 | -21.42 | QP |
| 2 | | 0.1700 | 10.93 | 10.82 | 21.75 | 54.96 | -33.21 | AVG |
| 3 | | 0.4140 | 19.65 | 10.56 | 30.21 | 57.57 | -27.36 | QP |
| 4 | | 0.4140 | 9.88 | 10.56 | 20.44 | 47.57 | -27.13 | AVG |
| 5 | | 0.7580 | 25.36 | 10.76 | 36.12 | 56.00 | -19.88 | QP |
| 6 | | 0.7580 | 6.14 | 10.76 | 16.90 | 46.00 | -29.10 | AVG |
| 7 | | 2.5620 | 30.34 | 11.70 | 42.04 | 56.00 | -13.96 | QP |
| 8 | * | 2.5620 | 24.77 | 11.70 | 36.47 | 46.00 | -9.53 | AVG |
| 9 | | 5.1260 | 26.74 | 12.28 | 39.02 | 60.00 | -20.98 | QP |
| 10 | | 5.1260 | 19.04 | 12.28 | 31.32 | 50.00 | -18.68 | AVG |
| 11 | | 11.3940 | 28.58 | 13.27 | 41.85 | 60.00 | -18.15 | QP |
| 12 | | 11.3940 | 25.86 | 13.27 | 39.13 | 50.00 | -10.87 | AVG |

## 6. RADIATED EMISSION MEASUREMENT

### 6.1. Block Diagram of Test Setup

#### 6.1.1.Block Diagram of connection between the EUT and the simulators

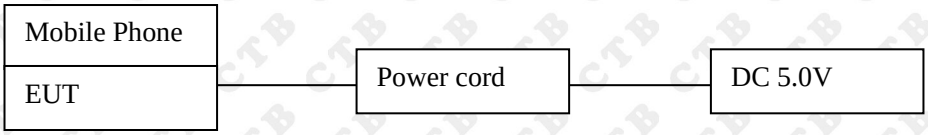


#### 6.1.2.Anechoic Chamber Test Setup Diagram

（A）Radiated Emission Test-Up Frequency Below 30MHz

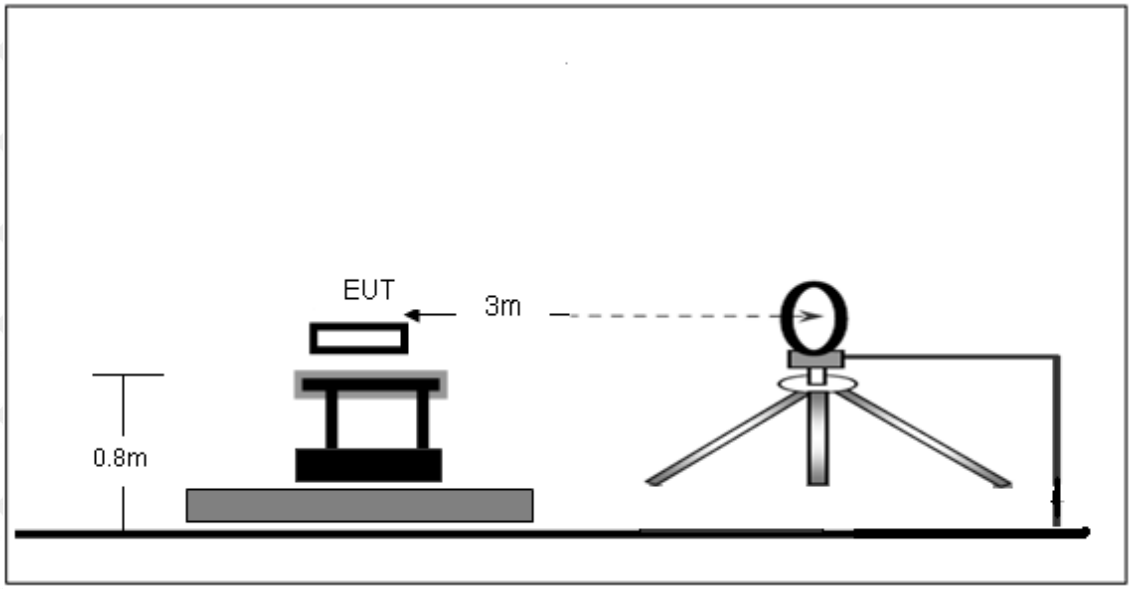

（B）Radiated Emission Test-Up Frequency 30MHz~1GHz

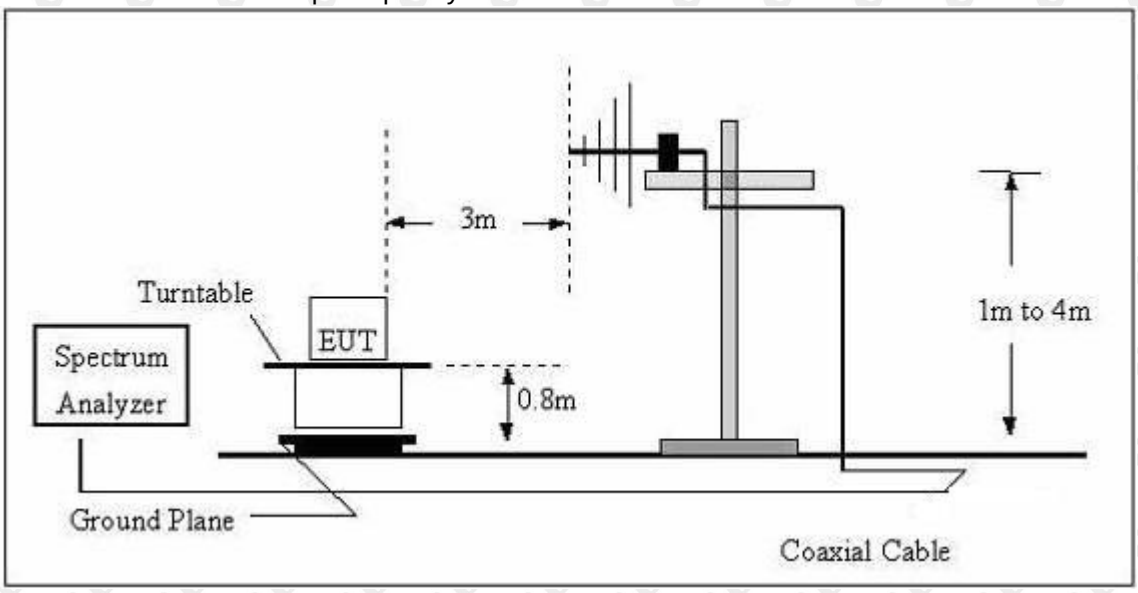


The radiated emission tests were performed in the 3 meters chamber test site, using the setup accordance with the ANSI C63.10-2013. The specification used was the FCC 15.209 and FCC 15.205 limits.

6.2. Test Standard

FCC §15.209; §15.205

6.3. EMI Test Receiver Setup

The system was investigated from 9kHz to1GHz.

During the radiated emission test, the EMI test receiver setup was set with the following configurations:

| Frequency Range | RBW | Video B/W | Detector |
|---|---|---|---|
| 9 kHz – 150 kHz | 200 kHz | 1 kHz | QP |
| 150 kHz – 30MHz | 9kHz | 30kHz | QP |
| 30 MHz – 1000 MHz | 120 kHz | 300 kHz | QP |

Note: For the frequency bands 9-90 kHz and 110-490 kHz, the test was based on average detector.

6.4. Test Procedure

The EUT is placed on a turn table which is 0.8 meter above ground. The turn table can rotate 360 degrees to determine the position of the maximum emission level. The EUT is set 3 meters away from the receiving antenna which is mounted on a antenna tower. The antenna can move up and down between 1 to 4 meters to find out the maximum emission level. Broadband antenna (calibrated by dipole antenna) are used as a receiving antenna. Both horizontal and vertical polarization of the antenna are set on measurement.

6.5. Test Result

PASS

Please refer to the following pages.

9kHz-30MHz

| | | | |
|---|---|---|---|
| Temperature: | 23℃ | Relative Humidity: | 54% |
| Pressure: | 1010 hPa | Polarization : | Horizontal |
| Test Voltage: | AC120V/60Hz | Test Mode : | 15W |

| Freq.( MHz) | Detector Mode (PK/QP/AV) | Reading( dBuV) | Factor (dB) | ActualFS(d BuV/m) | Limits3m(d BuV/m) | Margin (dBuV/m) |
|---|---|---|---|---|---|---|
| 0.110 | PEAK | 51.57 | 20.47 | 72.04 | 106.78 | -34.74 |
| 0.347 | PEAK | 46.1 | 20.23 | 66.33 | 96.8 | -30.47 |
| 0.552 | PEAK | 38.9 | 20.01 | 58.91 | 72.77 | -13.86 |
| 0.879 | PEAK | 32.31 | 19.95 | 52.26 | 68.72 | -16.46 |
| 1.168 | PEAK | 27.89 | 19.87 | 47.76 | 66.26 | -18.5 |
| 2.380 | PEAK | 27.31 | 19.78 | 47.09 | 60.07 | -12.98 |

Note:
Pre-scan in the all of mode, the worst case in of was recorded.
Factor = antenna factor + cable loss – pre-amplifier.
Margin = Limit - Emission Level.

30MHz-1GHz

| | | | |
|---|---|---|---|
| Temperature: | 23℃ | Relative Humidity: | 54% |
| Pressure: | 1010 hPa | Polarization : | Horizontal |
| **Test Voltage:** | AC120V/60Hz | Test Mode : | 15W |

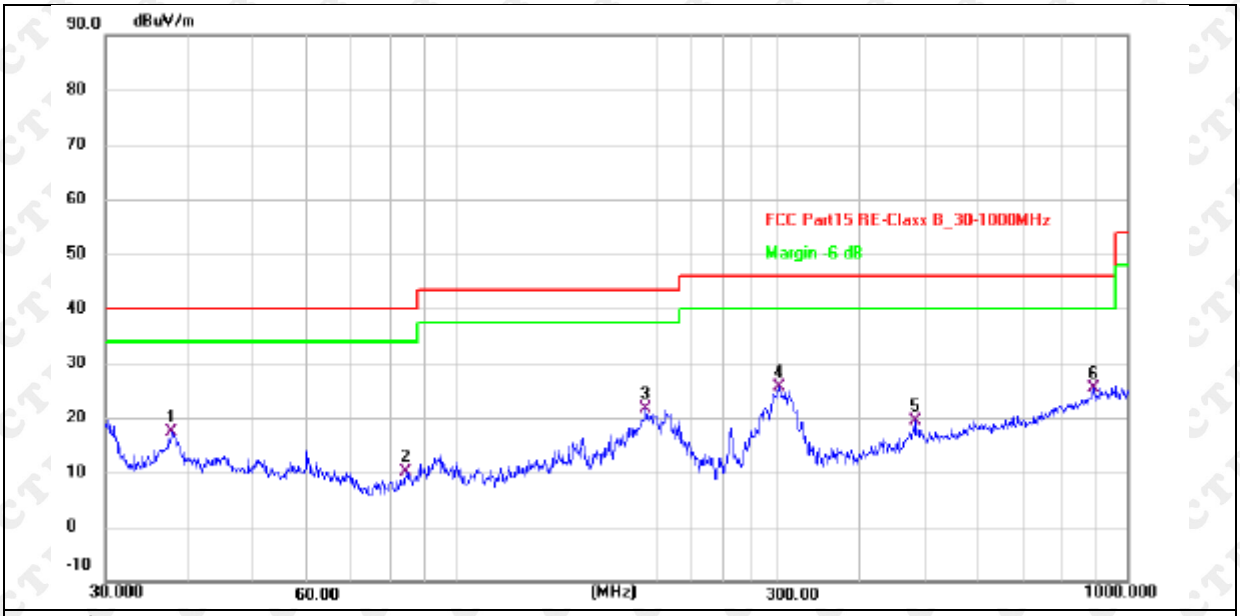


Remark:
Factor = Antenna Factor + Cable Loss – Pre-amplifier, Margin = Measurement– Limit.

| No. | Frequency (MHz) | Reading (dBuV) | Factor (dB/m) | Level (dBuV/m) | Limit (dBuV/m) | Margin (dB) | Detector |
|---|---|---|---|---|---|---|---|
| 1 | 37.6797 | 30.27 | -12.87 | 17.40 | 40.00 | -22.60 | QP |
| 2 | 84.1100 | 28.45 | -18.41 | 10.04 | 40.00 | -29.96 | QP |
| 3 | 191.7450 | 38.62 | -16.98 | 21.64 | 43.50 | -21.86 | QP |
| 4 * | 302.4811 | 39.26 | -13.75 | 25.51 | 46.00 | -20.49 | QP |
| 5 | 482.2155 | 29.09 | -9.83 | 19.26 | 46.00 | -26.74 | QP |
| 6 | 890.7277 | 25.94 | -0.54 | 25.40 | 46.00 | -20.60 | QP |

| | | | |
|---|---|---|---|
| Temperature: | 23℃ | Relative Humidity: | 54% |
| Pressure: | 1010 hPa | Polarization : | Vertical |
| **Test Voltage:** | AC120V/60Hz | Test Mode : | 15W |

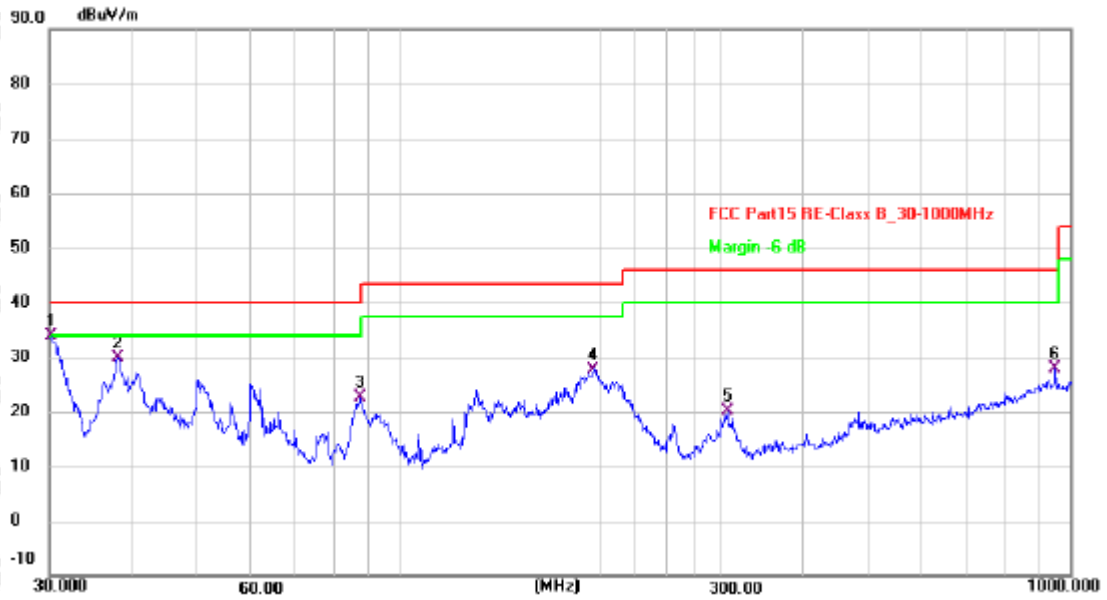


Remark:
Factor = Antenna Factor + Cable Loss – Pre-amplifier, Margin = Measurement– Limit.

| No. | Frequency (MHz) | Reading (dBuV) | Factor (dB/m) | Level (dBuV/m) | Limit (dBuV/m) | Margin (dB) | Detector |
|---|---|---|---|---|---|---|---|
| 1 * | 30.2111 | 46.89 | -12.94 | 33.95 | 40.00 | -6.05 | QP |
| 2 | 37.9450 | 42.82 | -12.84 | 29.98 | 40.00 | -10.02 | QP |
| 3 | 87.4176 | 41.01 | -18.43 | 22.58 | 40.00 | -17.42 | QP |
| 4 | 195.1363 | 44.76 | -17.01 | 27.75 | 43.50 | -15.75 | QP |
| 5 | 307.8312 | 33.87 | -13.67 | 20.20 | 46.00 | -25.80 | QP |
| 6 | 948.7610 | 28.39 | -0.48 | 27.91 | 46.00 | -18.09 | QP |

## 7. OCCUPIED BANDWIDTH

### 7.1. Block Diagram of Test Setup

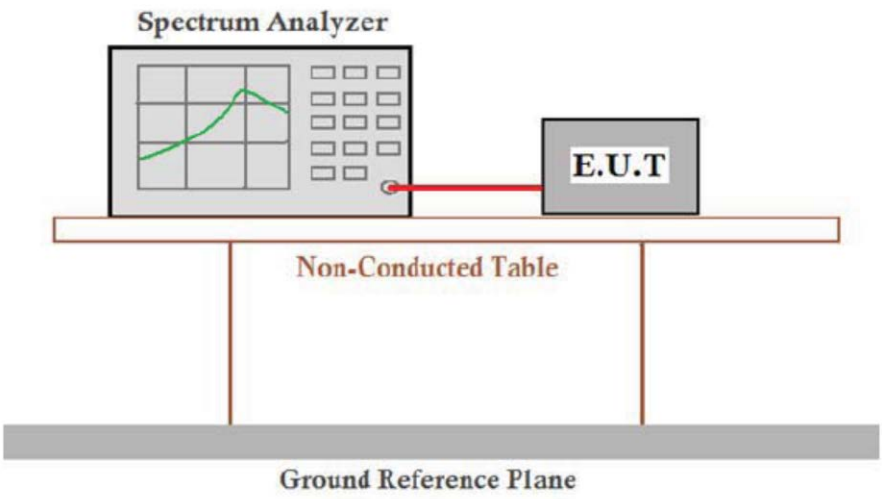


### 7.2. Rules and specifications

CFR 47 Part 15.215(c)
ANSI C63.10-2013

### 7.3. Test Procedure

Intentional radiators operating under the alternative provisions to the general emission limits, as contained in §§15.217 through 15.257 and in subpart E of this part, must be designed to ensure that 20dB bandwidth of the emission, or whatever bandwidth may otherwise be specified in the specific rule section under which the equip compliance with the 20dB attenuation specification may base on measurement at the intentional radiator's antenna output terminal unless the intentional radiator uses a permanently attached antenna, in which case compliance shall be.deomonstrated by measuring the radiated emissions.

### 7.4. Test Result

PASS

| Mode | Freq (KHz) | 20dB Bandwidth (Hz) | Limit (Hz) | Conclusion |
|---|---|---|---|---|
| Tx Mode | 111.928 | 259 | / | PASS |

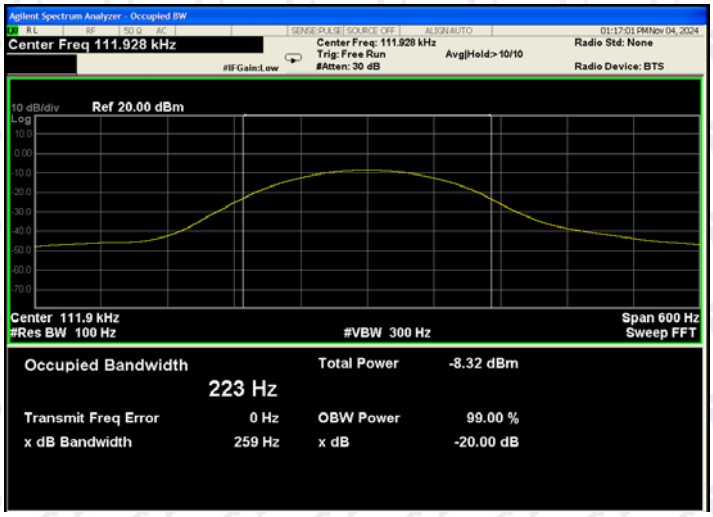

8. EUT TEST PHOTOS

**Conducted Measurement Photos**

9KHz-30MHz

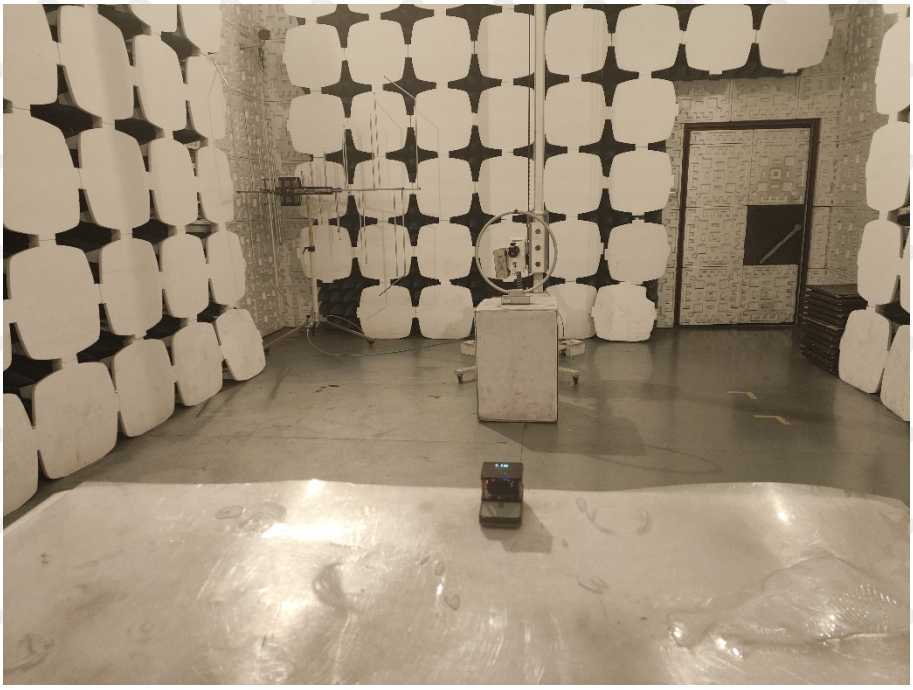

30MHz-1GHz

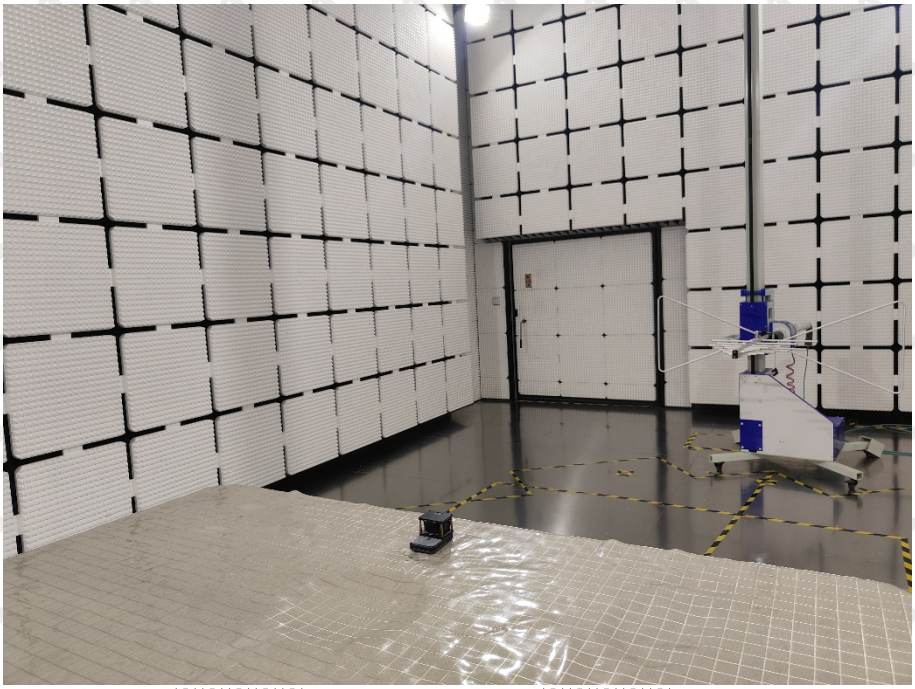

※※※※※ END OF REPORT ※※※※※