EMC TEST REPORT

Product Name:	hidden camera detector
FCC ID:	2BLWR-G007
Trade mark:	N/A
Model No.:	G007, G007S, G007Mini, G007 Pro, G007 Plus, G007 Max, G008, G008S, G008 Mini, G008 Pro, G008 Plus, G008 Max, G009, G100, G110
S/N:	/
Report No.:	CTB24102202301E02
Applicant:	Shenzhen Qianhuan Intelligent Technology Co., LTD
Address:	Room 520, N Chuanghui Building, 15 Tian 'an Road, Bantian Street, Longgang District, Shenzhen
Manufacturer:	Shenzhen Qianhuan Intelligent Technology Co., LTD
Address:	Room 520, N Chuanghui Building, 15 Tian 'an Road, Bantian Street, Longgang District, Shenzhen
Prepared by:	Shenzhen CTB Testing Technology Co., Ltd.
Address:	1&2/F., Building A, No.26, Xinhe Road, Xinqiao, Xinqiao Street, Bao'an District, Shenzhen, Guangdong, China
Date of Receipt:	Oct. 22, 2024
Date of Test(s):	Oct. 22, 2024 ~ Oct. 28, 2024
Date of Issue:	Oct. 28, 2024
Test Standard(s):	CFR47, FCC Part 15 Subpart B, ANSI C63.4: 2014
Test Result:	Pass

In the configuration tested, the EUT complied with the standards specified above.

Compiled by:	Reviewed by:	Approved by:
Michael Niu	Bin Mei	Rita Xiao

Note: If there is any objection to the inspection results in this report, please submit a written report to the company within 15 days from the date of receiving the report. The test report is effective only with both signature and specialized stamp. This result(s) shown in this report refer only to the sample(s) tested. Without written approval of Shenzhen CTB Testing Technology Co., Ltd. this report can't be reproduced except in full. The tested sample(s) and the sample information are provided by the client. "★" indicates the testing items were fulfilled by subcontracted lab. "▬" indicates the items are not in CNAS accreditation scope.

Table of Contents

1. Description of version 3
2. Test summary 4
3. Measurement uncertainty 5
4. General information 6
   4.1. Description of EUT 6
   4.2. Description of accessory device 6
   4.3. Test conditions 6
   4.4. Block diagram of EUT configuration 6
   4.5. Operating condition of EUT 6
5. List of Test and Measurement Instruments 7
6. Conducted Emission 9
   6.1. Limit 9
   6.2. Test setup 9
   6.3. EMI test receiver setup 9
   6.4. Test procedure 9
   6.5. Test results 10
7. Radiated emissions 12
   7.1. Limit 12
   7.2. Test setup 12
   7.3. EMI test receiver setup and spectrum analyzer setup 13
   7.4. Test procedure 13
   7.5. Corrected Amplitude & Margin Calculation 13
   7.6. Test results 14
8. Photographs of test setup 16

1. Description of version

Report No.	Issue Date	Description	Approved
CTB24102202301E02	Oct. 28, 2024	Original	Valid

2. Test summary

Test procedures according to the technical standards:

Standard	Test Item	Test Result
§15.107	Conducted Emission	PASS
§15.109	Radiated Emission	PASS

3. Measurement uncertainty

The reported uncertainty of measurement y ± U, where expended uncertainty U is based on a standard uncertainty multiplied by a coverage factor of k=2, providing a level of confidence of approximately 95 %

Test Item	Frequency	Expanded Uncertainty (U_{Lab})
Conducted Emission	150 kHz to 30 MHz	±3.1 dB
Radiated Emission	30 MHz to 1000 MHz	±4.1 dB
Radiated Emission	1000 MHz to 6000 MHz	±4.8 dB

4. General information

1.1. Description of EUT

Product name	hidden camera detector
Trade mark	N/A
Model No.	G007
Serial Model No.	G007, G007S, G007Mini, G007 Pro, G007 Plus, G007 Max, G008, G008S, G008 Mini, G008 Pro, G008 Plus, G008 Max, G009, G100, G110
Model Difference	All the model are the same circuit and RF module, only different for model name. Test sample model: G007
Configuration	☒ Table-top ☐ Floor-standing
The highest frequency of the internal sources of the EUT	☐ below 1.705 MHz, the measurement shall only be made up to 30 MHz. ☒ between 1.705 MHz and 108 MHz, the measurement shall only be made up to 1 GHz. ☐ between 108 MHz and 500 MHz, the measurement shall only be made up to 2 GHz. ☐ between 500 MHz and 1 GHz, the measurement shall only be made up to 5 GHz. ☐ above 1 GHz, the measurement shall be made up to 5th harmonic of the highest frequency or 40 GHz, whichever is lower.
power supply specification	Type-C, 5V/1A,DC 3.7V by battery

Note: The above EUT information is declared by manufacturer and for more detailed features description, please refer to the manufacturer's specifications or the User's Manual.

1.2. Description of accessory device

No.	Device Type	Brand	Model	Specification	Note
1	Adapter	JIYIN	JY-05100C	/	AE

1.3. Test conditions

Temperature: 15-25℃
Relative Humidity: 30-60 %
Atmospheric pressure: 800hPa-1060hPa

1.4. Block diagram of EUT configuration

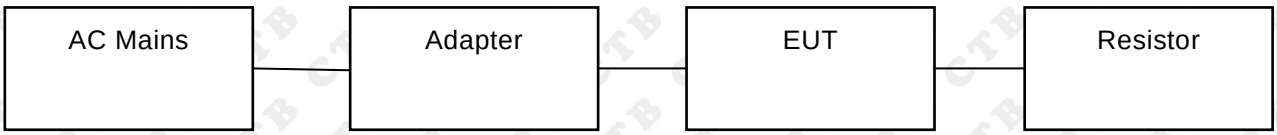

1.5. Operating condition of EUT

Operating condition	Mode 1	Working	Test Voltage	/
Note:This test covers all possible operating modes of the device, only the worst data are list in report. The worst data are shows (*)is the nearest standard limit which were recorded in this report.				

5. List of Test and Measurement Instruments

Continuous disturbance						
No.	Equipment	Manufacturer	Model No.	Serial No.	Firmware version	Calibrated until
1	843 Shield Room	C/ R/ T	843	/	/	2027/6/21
2	AMN	ROHDE&SCHWARZ	ESH3-Z5	831551852	/	2025/6/30
3	Pulse limiter	ROHDE&SCHWARZ	ESH3Z2	357881052	/	2025/6/28
4	EMI TEST RECEIVER	ROHDE&SCHWARZ	ESCI	100428	V4.42.SP3	2025/6/30
5	Coaxial cable	ZDECL	Z302S	18091904	/	2025/6/30
6	ISN	Schwarzbeck	NTFM8158	183	/	2025/6/30
7	Voltage sensor	Schwarzbeck	TK 9420	01189	/	2024/11/16
8	EZ-EMC	Frad	EMC-con3A1.1	/	/	/
9	Current Probe	FCC	F-52B	199453	/	2025/5/27
10	Communication test set	R&S	CMW500	108058	B.19.07 (E1962B)	2025/6/28
11	Communication test set	Agilent	E5515C	MY50102567	V3.5.80	2025/6/28

Radiated emission(No.1 Chamber)						
No.	Equipment	Manufacturer	Model No.	Serial No.	Firmware version	Calibrated until
1	966 Chamber	C/ R/ T	966	/	/	2027/6/21
2	Double Ridged Broadband Horn Antenna	Schwarzbeck	BBHA 9120 D	01911	/	2025/7/06
3	TRILOG Broadband Antenna	Schwarzbeck	VULB 9168	00869	/	2025/6/29
4	Amplifier	Agilent	8449B	3008A01838	/	2025/6/30
5	Amplifier	HP	8447E	2945A02747	/	2025/6/28
6	loop antenna	Schwarzbeck	FMZB 1519B	1519B-224	/	2025/6/29
7	EMI TEST RECEIVER	ROHDE&SCHWARZ	ESPI	100362	RF_ATTEN_7 (104489/003)	2025/6/28
8	Spectrum Analyzer	KEYSIGHT	N9020A	MY51289897	A.14.16	2025/6/28
9	Coaxial cable	ETS	RFC-SNS-100-NMS-80	/	/	2025/6/28
10	Coaxial cable	ETS	RFC-SN-100-NMS-20	/	/	2025/6/28

11	Coaxial cable	ETS	RFC-SNS-100-SMS-20	/	/	2025/6/28
12	Coaxial cable	ETS	RFC-NNS-100-NMS-300	/	/	2025/6/28
13	EMI test software	Frad	EZ-EMC	Ver/ FA-03A2 RE	/	/
14	Communication test set	R&S	CMW500	108058	B.19.07 (E1962B)	2025/6/28
15	Communication test set	Agilent	E5515C	MY50102567	V3.5.80	2025/6/28

Radiated emission(No.2 Chamber)						
No.	Equipment	Manufacturer	Model No.	Serial No.	Firmware version	Calibrated until
1	966 Chamber	C/ R/ T	966	/	/	2026/11/14
2	Double Ridged Broadband Horn Antenna	Schwarzbeck	BBHA 9120 D	01911	/	2026/7/07
3	Broadband Antenna	Schwarzbeck	VULB 9168	1471	/	2025/7/06
4	Amplifier	Agilent	8449B	3008A01838	/	2025/6/30
5	Preamplifier	Schwarzbeck	BBV 9743 B	00500	/	2025/5/23
6	EMI TEST RECEIVER	R&S	ESCI7	100861	/	2024/11/27
7	Spectrum Analyzer	KEYSIGHT	N9020A	MY51289897	A.14.16	2025/6/28
8	EMI test software	Farad	EZ-EMC	/	Ver. FARAD-3A1+	/
9	Coaxial cable	Rosenberg	8m	/	/	2024/11/27
10	Coaxial cable	Times	2m	/	/	2024/11/27
11	Coaxial cable	Times	2m	/	/	2024/11/27
12	Coaxial cable	Times	1m	/	/	2024/11/27
13	loop antenna	Schwarzbeck	FMZB 1519B	1519B-224	/	2025/6/29
14	Communication test set	R&S	CMW500	108058	B.19.07 (E1962B)	2025/6/28
15	Communication test set	Agilent	E5515C	MY50102567	V3.5.80	2025/6/28

6. Conducted Emission

3.1. Limit

Except for Class A devices:

Frequency of emission (MHz)	Conducted limit (dBμV)	
	Quasi-peak	Average
0.15-0.5	66 to 56*	56 to 46*
0.5-5	56	46
5-30	60	50

Note: Decreases with the logarithm of the frequency.

For Class A devices:

Frequency of emission (MHz)	Conducted limit (dBμV)	
	Quasi-peak	Average
0.15-0.5	79	66
0.5-30	73	60

3.2. Test setup

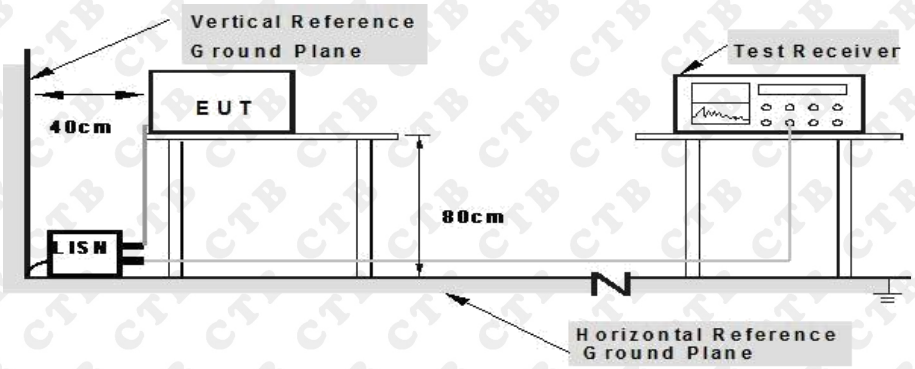

Note: 1.Support units were connected to second LISN.
2.Both of LISNs (AMN) are 80 cm from EUT and at least 80 from other units and other metal planes

The setup of EUT is according with ANSI C63.4 measurement procedure. Specification used with FCC Part 15 limits.

3.3. EMI test receiver setup

Frequency Range	9kHz-30MHz
Resolution Bandwidth	200Hz (9kHz-150kHz) 9kHz (150kHz-30MHz)

3.4. Test procedure

1. Measurement was performed in shielded room, and instruments used were followed clause 4 of ANSI C63.4.
2. Detailed test procedure was following clause 7 of ANSI C63.4.
3. Frequency range 150kHz – 30MHz was checked and EMI receiver measurement bandwidth was set to 9 kHz.

3.5. Test results

Temperature:	23℃	Relative Humidity:	54 %
Pressure:	101kPa	Phase :	Line
Test Voltage :	AC 120V/60Hz	Test Mode:	Mode 1

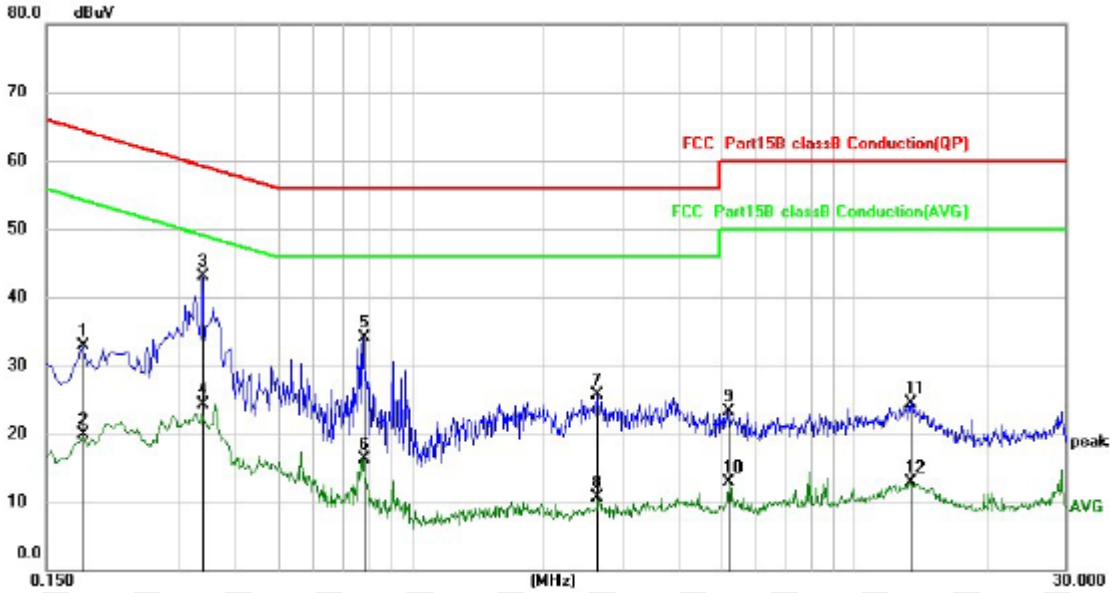

No.	Mk.	Freq.	Reading Level	Correct Factor	Measure-ment	Limit	Over	
		MHz	dBuV	dB	dBuV	dBuV	dB	Detector
1		0.1819	22.16	10.78	32.94	64.40	-31.46	QP
2		0.1819	9.05	10.78	19.83	54.40	-34.57	AVG
3	*	0.3379	32.49	10.61	43.10	59.25	-16.15	QP
4		0.3379	13.72	10.61	24.33	49.25	-24.92	AVG
5		0.7820	23.39	10.78	34.17	56.00	-21.83	QP
6		0.7820	5.45	10.78	16.23	46.00	-29.77	AVG
7		2.6260	14.02	11.72	25.74	56.00	-30.26	QP
8		2.6260	-0.98	11.72	10.74	46.00	-35.26	AVG
9		5.2020	11.05	12.31	23.36	60.00	-36.64	QP
10		5.2020	0.68	12.31	12.99	50.00	-37.01	AVG
11		13.3980	11.10	13.31	24.41	60.00	-35.59	QP
12		13.3980	-0.33	13.31	12.98	50.00	-37.02	AVG

Note: Result=Reading + Factor
Over Limit=Result - Limit

Temperature:	23℃	Relative Humidity:	54 %
Pressure:	101kPa	Phase :	Neutral
Test Voltage :	AC 120V/60Hz	Test Mode:	Mode 1

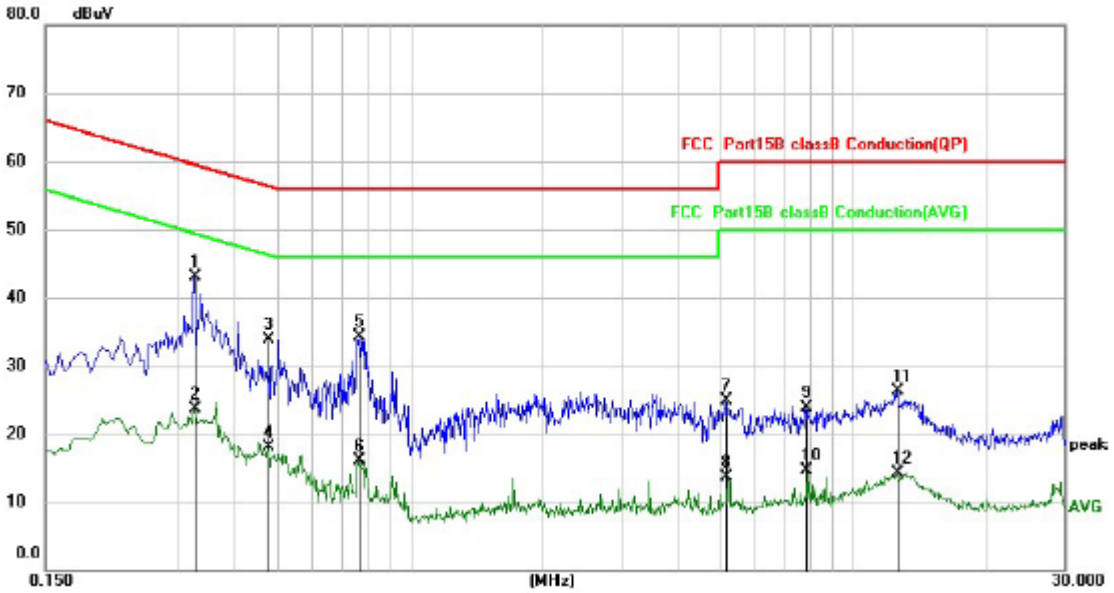

No.	Mk.	Freq.	Reading Level	Correct Factor	Measure-ment	Limit	Over	
		MHz	dBuV	dB	dBuV	dBuV	dB	Detector
1	*	0.3260	32.43	10.62	43.05	59.55	-16.50	QP
2		0.3260	13.03	10.62	23.65	49.55	-25.90	AVG
3		0.4780	23.43	10.52	33.95	56.37	-22.42	QP
4		0.4780	7.55	10.52	18.07	46.37	-28.30	AVG
5		0.7660	23.58	10.77	34.35	56.00	-21.65	QP
6		0.7660	5.35	10.77	16.12	46.00	-29.88	AVG
7		5.1660	12.52	12.30	24.82	60.00	-35.18	QP
8		5.1660	1.33	12.30	13.63	50.00	-36.37	AVG
9		7.8300	10.90	13.02	23.92	60.00	-36.08	QP
10		7.8300	1.69	13.02	14.71	50.00	-35.29	AVG
11		12.5740	13.10	13.29	26.39	60.00	-33.61	QP
12		12.5740	0.94	13.29	14.23	50.00	-35.77	AVG

Note: Result=Reading + Factor
Over Limit=Result – Limit

7. Radiated emissions

4.1. Limit

Except for Class A devices (at 3m):

Frequency of emission (MHz)	Field strength (microvolts/meter)	
	(microvolts/meter)	(dBμV/m)
30-88	100	40
88-216	150	43.5
216-960	200	46
Above 960	500	54

For Class A devices (at 10m):

Frequency of emission (MHz)	Field strength (microvolts/meter)	
	(microvolts/meter)	(dBμV/m)
30-88	90	39
88-216	150	43.5
216-960	210	46.4
Above 960	300	49.5

4.2. Test setup

Radiated Emission Test Set-Up Frequency Below 1 GHz

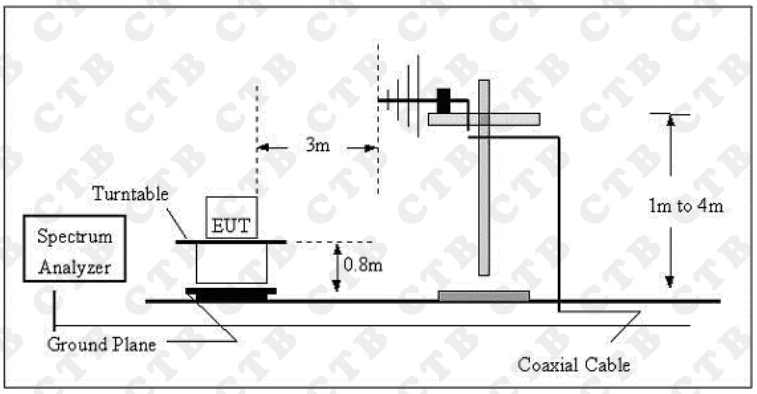

Radiated Emission Test Set-Up Frequency Above 1GHz

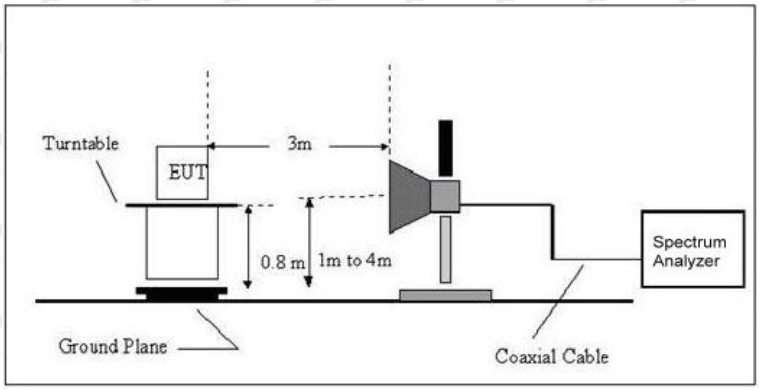

The radiated tests were performed in 3 meter Charmber test site, using the setup accordance with the ANSI C63.4:2014.

4.3. EMI test receiver setup and spectrum analyzer setup

During the radiated emission test, the EMI test receiver and Spectrum Analyzer were set with the following configurations:

Frequency Range	RBW	Video B/W	IF B/W	Detector
30MHz-1000MHz	100kHz	300kHz	120kHz	QP
Above 1GHz	1MHz	3MHz	/	PK
	1MHz	10Hz	/	AVG

4.4. Test procedure

1. The measurement was performed in a semi-anechoic chamber, and instruments used were followed clause 4 of ANSI C63.4

2. Detailed test procedure was following clause 8 of ANSI C63.4.

4.5. Corrected Amplitude & Margin Calculation

1. The Corrected Amplitude is calculated by adding the Antenna Factor and Cable Loss, and subtracting the Amplifier Gain from the Meter Reading. The basic equation is as follows:

   Corrected Amplitude = Meter Reading + Antenna Factor + Cable Loss - Amplifier Gain

2. The “Margin” column of the following data tables indicates the degree of compliance with the applicable limit. For example, a margin of 7dB means the emission is 7dB below the limit. The equation for margin calculation is as follows:

   Margin = Limit – Corrected Amplitude

4.6. Test results

Temperature:	23℃	Relative Humidity:	54 %
Pressure:	101kPa	Polarization :	Horizontal
Test Voltage :	AC 120V/60Hz	Test Mode:	Mode 1

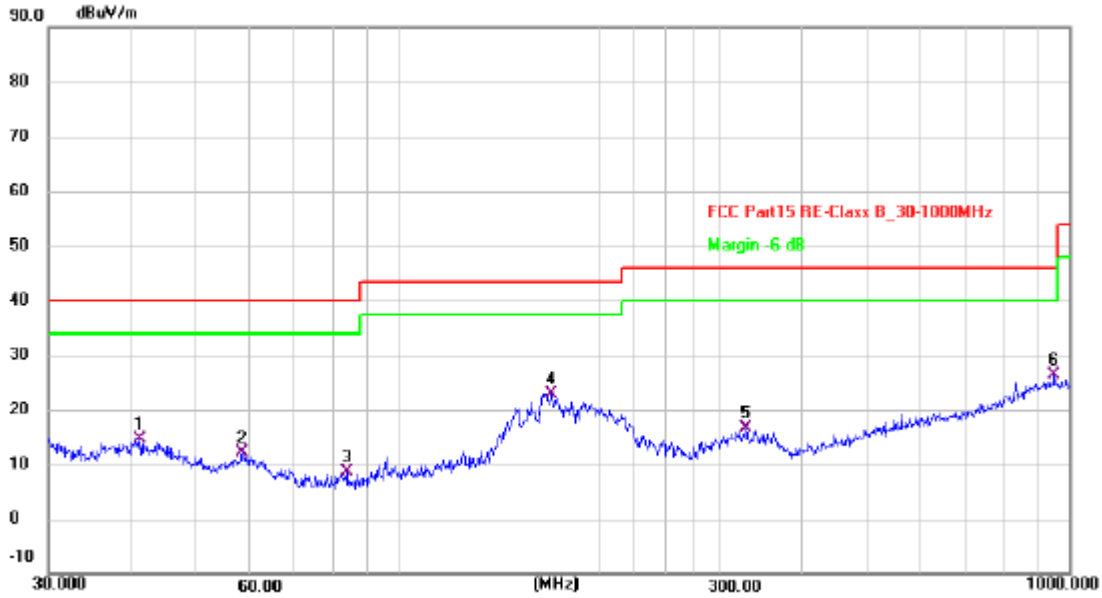

No.	Frequency (MHz)	Reading (dBuV)	Factor (dB/m)	Level (dBuV/m)	Limit (dBuV/m)	Margin (dB)	Detector
1	41.1320	27.52	-12.82	14.70	40.00	-25.30	QP
2	58.4074	26.86	-14.64	12.22	40.00	-27.78	QP
3	83.8155	27.13	-18.40	8.73	40.00	-31.27	QP
4	169.0053	37.18	-14.25	22.93	43.50	-20.57	QP
5	329.0390	29.92	-13.39	16.53	46.00	-29.47	QP
6 *	948.7610	26.98	-0.48	26.50	46.00	-19.50	QP

Note: Result=Reading+Factor

Over Limit=Result-Limit

Temperature:	23℃	Relative Humidity:	54 %
Pressure:	101kPa	Polarization :	Vertical
Test Voltage :	AC 120V/60Hz	Test Mode:	Mode 1

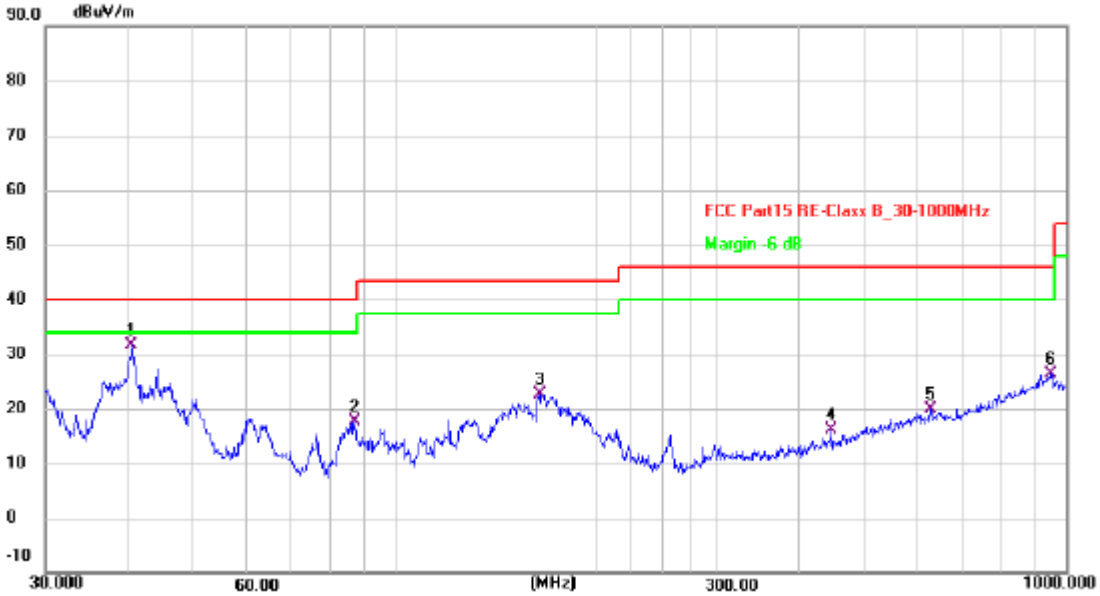

No.	Frequency (MHz)	Reading (dBuV)	Factor (dB/m)	Level (dBuV/m)	Limit (dBuV/m)	Margin (dB)	Detector
1 *	40.4170	44.40	-12.69	31.71	40.00	-8.29	QP
2	86.8067	35.98	-18.42	17.56	40.00	-22.44	QP
3	164.3301	36.49	-13.75	22.74	43.50	-20.76	QP
4	446.4140	27.00	-10.96	16.04	46.00	-29.96	QP
5	627.2737	26.09	-6.18	19.91	46.00	-26.09	QP
6	945.4400	26.83	-0.47	26.36	46.00	-19.64	QP

Note: Result=Reading+Factor
Over Limit=Result-Limit

8. Photographs of test setup

RE

CE

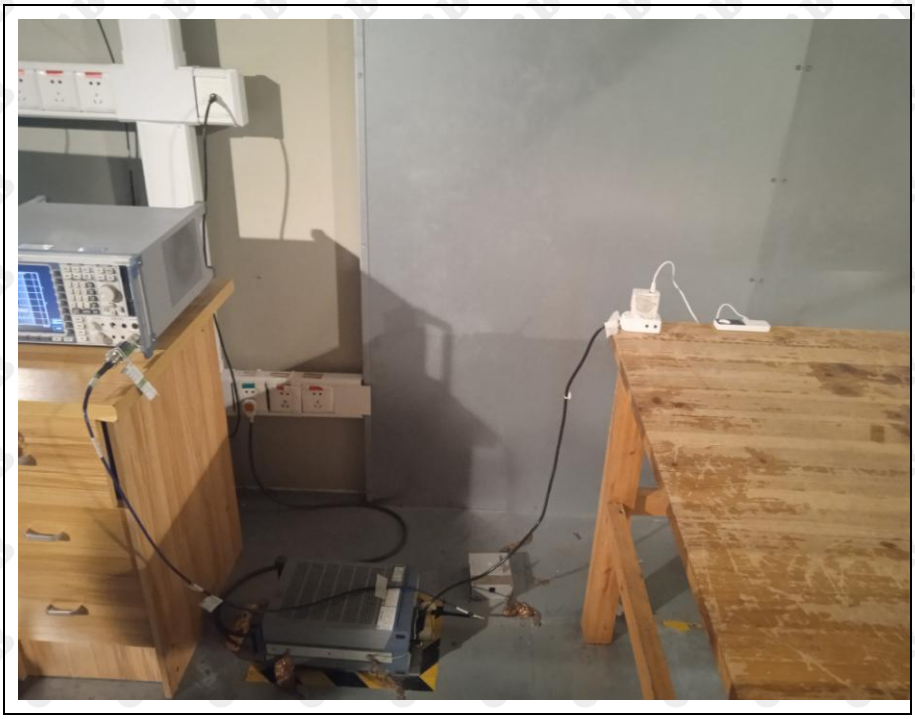

End of report