BVEVCS Series EV Charger

User Manual and Installation Instructions

version: 1.4

Contents

1. Safety Instructions 3
2. Introduction 4
   2.1 Technical Specifications: 4
   2.2 External Structure 5
3. Verify Contents 5
4. Gather Tools 6
5. Location Requirements 6
6. Wire the circuit 7
7. Mount EV Charger 8
8. Configuration and Operation 10
   8.1 Power-on Checking 10
   8.2 Start and stop charging station by card 10
9. Reset the charger's network 15
10. Troubleshooting 16
   10.1 Indicator Status 16
   10.2 Fault Code and Resolution 16
11. Quality Assurance 18
12. Contact Information 19

1. Safety Instructions

This manual contains important instructions for BVEVCS Series EV Charger.

Read and follow all warnings and instructions before installing and operating the charger. Install and operate only as instructed.

Failure to do so may lead to death, injury, or property damage, and will void the Limited Warranty.

WARNING

TO AVOID FIRE, SHOCK OF DEATH, TURN OFF POWER at the circuit breaker or fuse before installing or cleaning the charger!

WARNING

TO AVOID FIRE, SHOCK OF DEATH, OR DAMAGE TO THE CHARGER, carefully read the charging instructions in your vehicle's manual before charging and heed the following warnings:

1. This device MUST be installed, adjusted and serviced by qualified electrical personnel familiar with the construction and operation of this type of charger and the dangers involved.
2. This device MUST be grounded through a permanent wiring system or an equipment grounding conductor.
3. The device is designed only for vehicles that are compatible with the SAE J1772 Level 2 charging standard.
4. Do not install or use the charger near flammable explosive, or combustible materials, chemicals, vapors and other hazard objects.
5. Incorrect installation and testing of the device could potentially damage the vehicle's battery, components and / or the device itself.
6. Children should be supervised when around this equipment.
7. Do not use the charger if it is defective, appears cracked, frayed, broken or damaged.
8. Do not use the charger when the charger is exposed to severe rain, snow or other severe weather.
9. Do not forcefully pull the charging cable, damage it with sharp objects, put fingers or insert foreign objects into any part of the charging connector.
10. Do not operate the charger outside its operating temperature range of -22℉ to 122℉ (-30℃ to 50℃).
11. Ensure the charging cable is positioned so it is not stepped on, tripped over, or subjected to damage or stress. Do not close a garage door on the charging cable.
12. Ensure that BVEVCS Series EV Charger charging cable is positioned so it is not stepped on, tripped over, or subjected to damage or stress. Do not close a garage door on the charging cable.

13. Do not attempt to repair or service any part of the device yourself, the charger contains no field serviceable parts. If the device requires servicing, contact us.
14. When transporting the charger, do not subject it to strong force, or otherwise pull, twist, tangle, drag or step on the device.

No Accuracy Guarantee

Commercially reasonable efforts were made to ensure that the specifications and other information in this manual are accurate and complete at the time of its publication, However, the specifications and other information in this manual are subject to change at any time without prior notice.

2. Introduction

2.1 Technical Specifications:

Model	BVEVCS-32A	BVEVCS-48A
Charging capacity	Up to 7.6kW	Up to 11.5kW
Input voltage range	192-265VAC/60Hz	
Mode of connection	Hardwired, L1+L2+PE	
MAX. Charger Current	32A	48A
Standby power	≦3W	
AC measurement accuracy	1%	
Communication		
User interface	3.5'LCD	
Charging Cable	SAE J1772 Plug MAX.48A, Cable 16.4ft/5m	
Safety protection	Over current protection, Residual current protection, Ground protection, Surge protection, Over/Under voltage protection, Over/Under current protection, Over/Under temperature protection	
Protection	NEMA 3S/IP54	
Installation	Wall-mount/Pole-mount	
Operating temperature	-22℉~ 122℉	
Humidity	95% non-condensing	
Product Dimension	14.5*9*4 in(L*W*H)	
Package Dimension	18.3*12.8*10.6 in (L*W*H)	
Net Weight	13.2lb/6kg	
Gross Weight	18lb/8.15kg	

2.2 External Structure

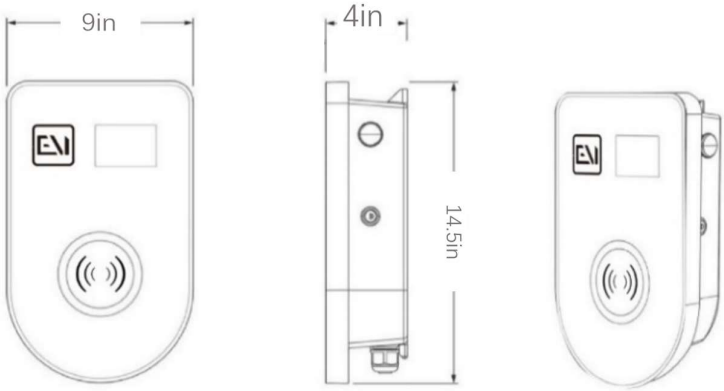

3. Verify Contents

Check the box to ensure you have the Quick Start guide, this installation guide, and these parts:

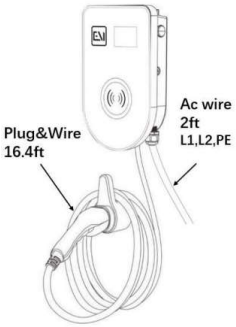				
	User Manual (x1)	φ6 Expansion Pipe (x6)	M4*40 Screw (x6)	
		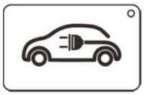		
Wall box(x1) With Plug&16.4ft (5m) wire and 2ft(0.6m) AC wire	The holder (x1)	CARD (x2)	Key (x2)	Position cardboard (x1)

Note: If there is a shortage in the quantity of any item or if any items are missing, please contact the seller at once.

4. Gather Tools

You may also need:

Tool Name	
Multimeter	
Philips head Screwdriver (PH2x150mm, PH3x250mm)	
Socket Wrench	
Electric drill	
Wire Cutter / Stripper	

5. Location Requirements

Select an optimal mounting location for safe operation, long service life and expected performance.

- Ensure the location allow the charging cable to reach the car's charging port while still providing slack.
- Ensure that the installation surface is solid enough to bear 4.5timers the weight of the charger and is suitable for the dimensions of the charger.
- Ensure the mounting structure where the charger is installed comply with local / national standards and guidelines.
- Make sure that the EV charger is installed at least 20 inches away from the surrounding walls, roofs or other large objects.
- If you use the mobile phone APP to control the EV charger, please ensure that

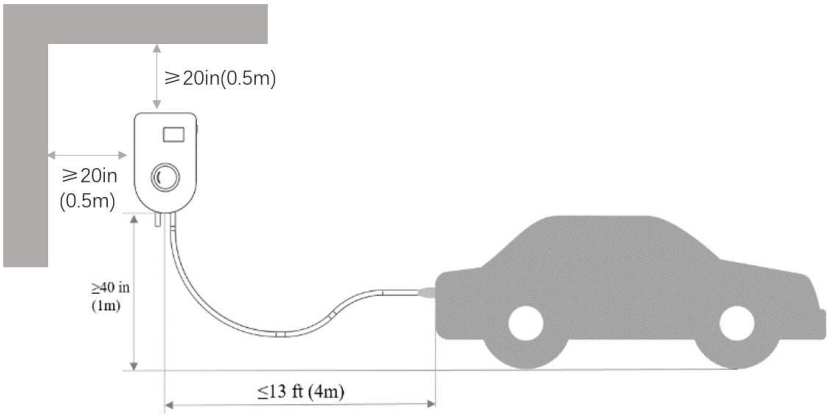

NOTICE

Note 1: Recommend that the height of the charger is at least 40 inches above ground and the distance from charger to the vehicle is less than 13 ft.

Note 2: Outdoor installation is an option, be sure to prepare an outdoor-rated, weather-resistant electrical outlet or hardwired installation.

6. Wire the circuit

BVEVCS Series EV Charger can also be wired for 32A or 48A amperages. Consult all applicable codes for breaker and wire sizing requirements. Use only copper conductors.

Model	Max Load	Recommended wire gauge (AWG)	Rated voltage	Recommended circuit Breaker	Mode of connection
BVEVCS-32A	32A	AWG8(*1)	240Vac	40~60A	Hardwire
BVEVCS-48A	48A	AWG6(*1)	240Vac	60~80A	Hardwire

7. Mount EV Charger

Please follow the steps below to install the charger

Step1: Drill holes with Position Cardboard	Step2: Install Expansion Pipes(3xM6x60mm)
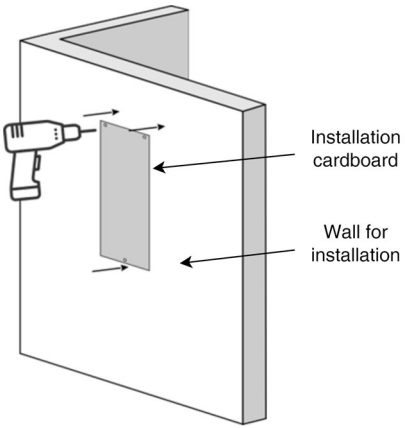	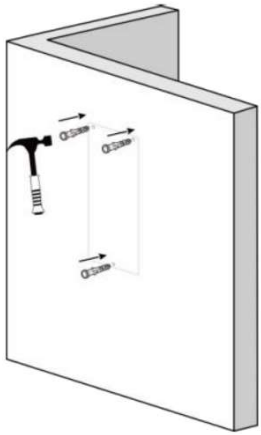
Step3: Open the charger cover with Wall Box Key, fix the charger with Screws (3xM5x50mm)	Step4: Mounting the Charging Gun Holder on the wall with Expansion Pipes and Screws (3xM5x50mm)
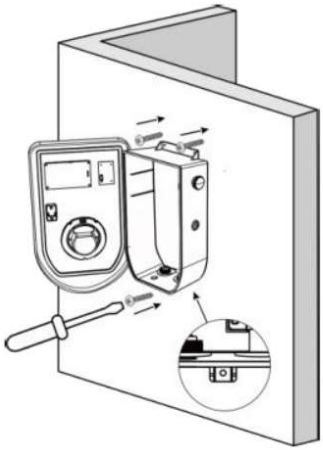	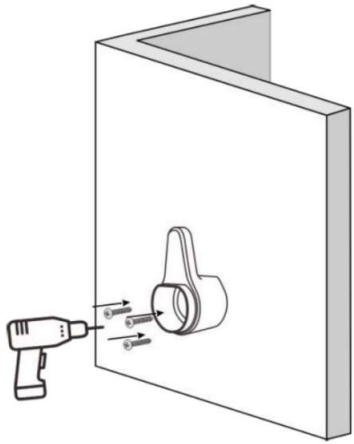

Step5: Connect power cable L1 and L2 to the grid via a circuit breaker and connect PE to Earth.

Note: The terminals of L1 L2 and PE cables have been applied in the factory as following:

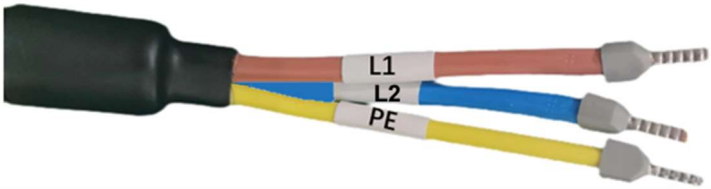

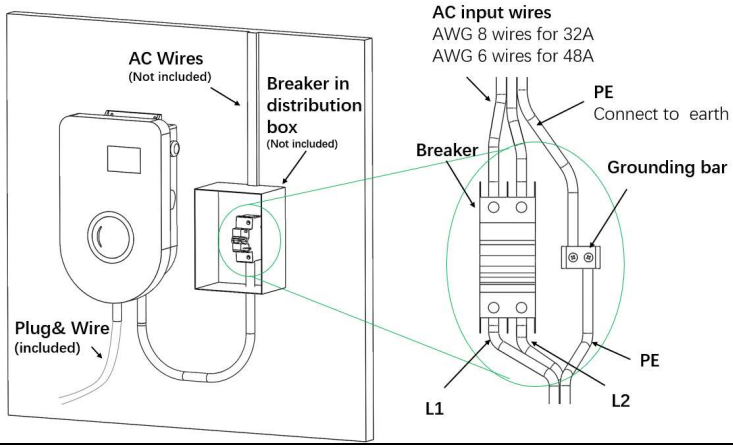

Step6: Lock the charger cover and pull-out Wall Box Key, Lock the cover of distribution box.

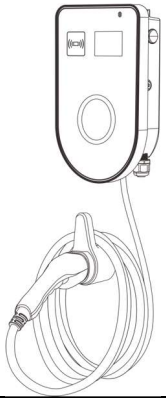

WARNING

RISK OF SHOCK
Comply with local electrical safety laws and regulations
Use certified power distribution box and circuit breaker
Ensure that no live conductor can be touched after installation, and **lock the cover** to prevent accidental opening of the cover and electric shock.
Keep the keys out of reach of children

8. Configuration and Operation

8.1 Power-on Checking

Please check / re-check the following items prior to initial Power-on:

- The charger's location allows good operational access to normal use and repair & maintenance.
- The AC input components within the premise's power supply are fitted correctly with required protection items prior to installation of the charger.
- Double confirm the charger is installed properly.
- No components or other items have been left on the top of the charger.

8.2 Start and stop charging station by card

Start charging

1. Plug charging cable into your car and LED ring turns yellow.
2. Hold your charge card in front of the reader, waiting 3 seconds.
3. LED ring turns green (Breathing state) when it starts charging.

Stop charging

1. Hold your charge card in front of the reader, waiting 3 seconds.
2. LED ring turns green when it stops charging.
3. Unplug charging cable from your car and place the charging cable back into charger station cable holder.

8.3 Start and stop charging station by APP

Step1- Download the APP “Smart Life” from Apple Store or Google Play, or scan the QR code below to download.

Step 2- Sign up and log in using your phone number or email address.

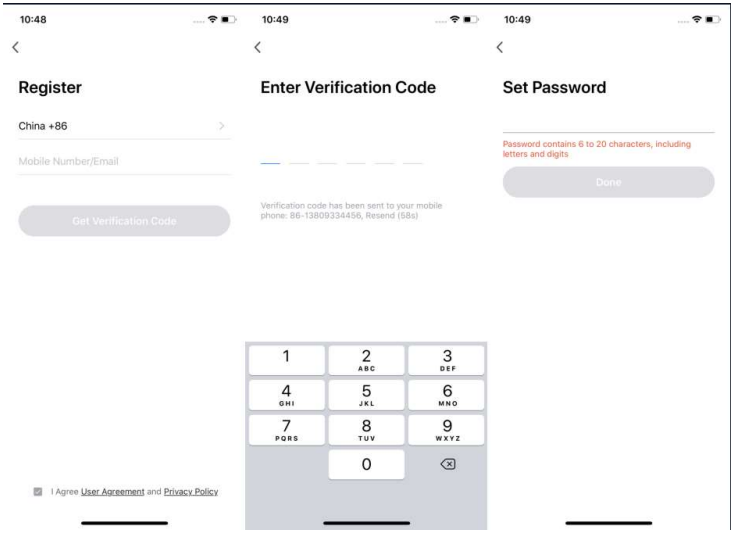

Note:

1.Use your email address or mobile number to register. The country/region of the app will be the same as the phone's. You can also change it when registering. (You cannot change the country/region after registration). Enter your mobile number/email and click “Get Verification Code.

2.Enter the verification code and go to the password setting page. Set your password as required and click “Done"

Step 3-Set up the network of the EV charger

Pre-preparation

- Power-on the EV charger;
- Keep your phone no more than 7ft(2m) away from the EV charger, turn on your phone's Bluetooth;
- Near the installation location, make sure the phone can be connected to the Internet through the network

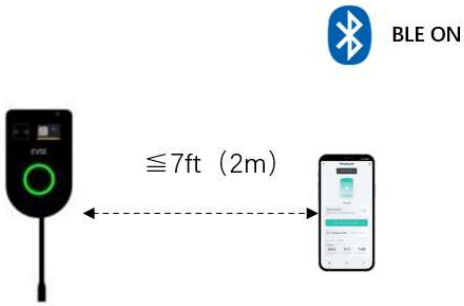

Open the "Smart Life" APP and follow the steps below to configure the charger's network.

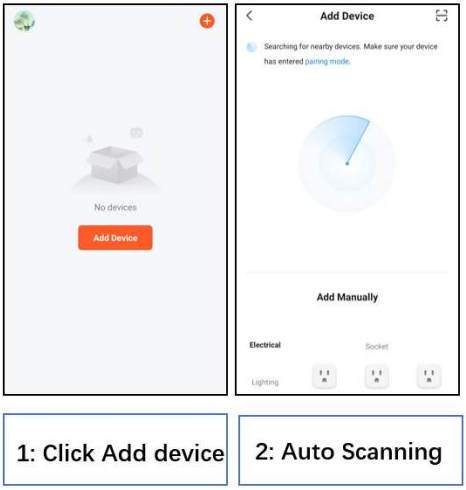

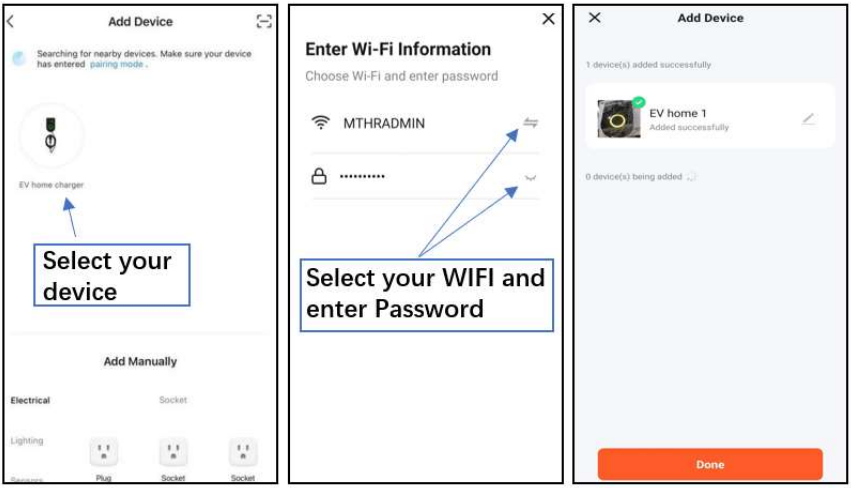

3: Find the charger Select your device

4: Select WIFI and enter password

5: Successfully added

	I

Step 4- Set the maximum charging current

Set the maximum charging power based on your distribution capacity.

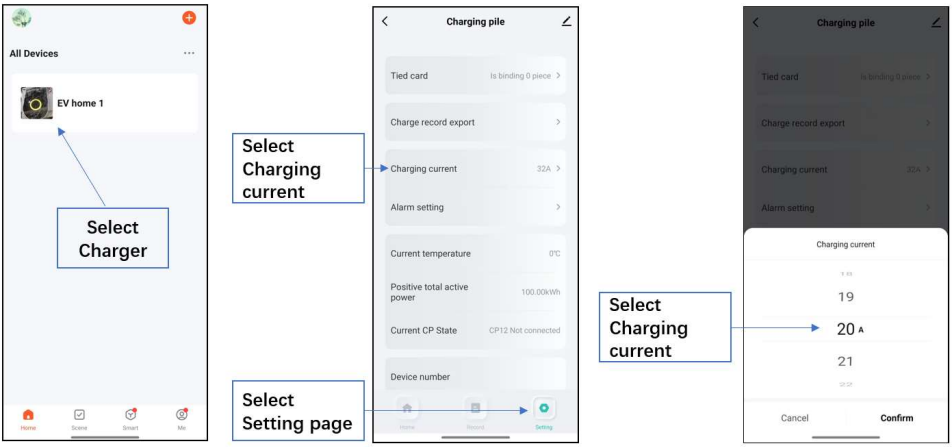

Step 5- Set charging mode

The charger provides 3 timing mode options, immediate charging, timed charging and delayed charging.

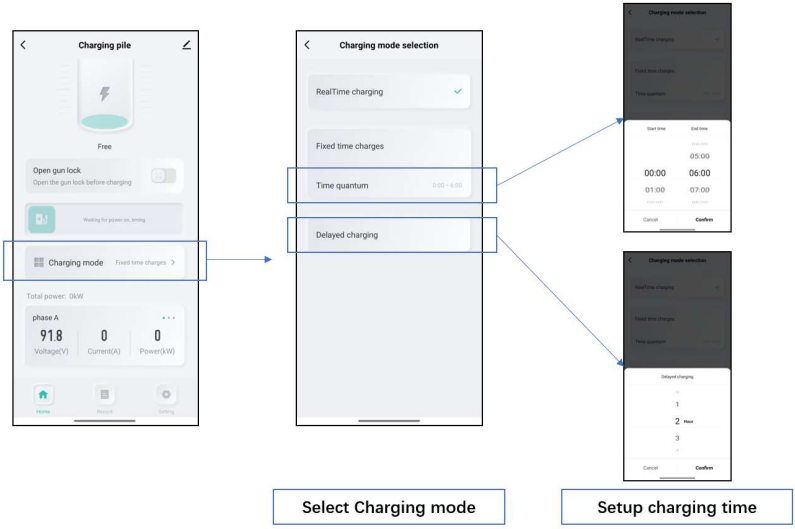

Step 6- Start charging by real-time charge

Plug charging cable into your car and LED ring turns yellow, slide to charge your car immediately.

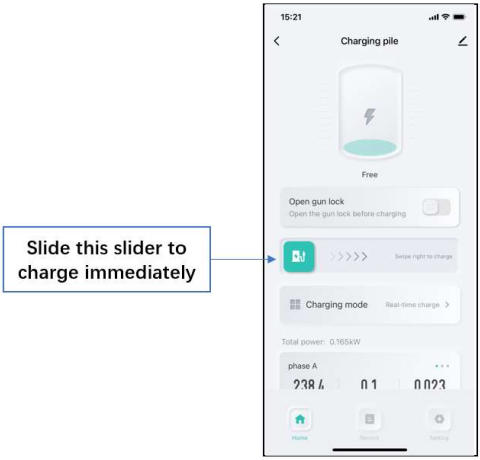

9. Reset the charger's network

Press in and pull out the emergency button 4 times to reset the network of the EV charger.

Refer to Step 3 in Chapter 8 of the manual to reconfigure the network.

10. Troubleshooting

10.1 Indicator Status

What you see	What it means	What to do
LED ring off or green	Charger station is ready for use.	Plug Charger station charging cable into the car
LED ring yellow	Charger stationcharging cable connected the car successfully	Hold your charge card in front of thereader
LED ring green breathing	Charger station is charging the car	The car is charging.
LED ring green	The car is fully charged.	Unplug charging cable from your car and place the charging cable back into Charger station cable holder.
LED ring red	Charger station is experiencing an error	Check the troubleshooting chapter in this manual for solutions.

10.2 Fault Code and Resolution

When a problem occurs, error messages are often shown on the display. With this information you can quickly identify and investigate the problem.

Picture	Reason	Troubleshooting
	Input voltage over range	Wait till power grid recover normal voltage range or power off and restart.
	Input voltage under range	
	AC input current over range	Shut off the breaker of AC line immediately. Check whether there is low resistance connection between two AC output wires.
	Leakage current fault	Shut off the breaker of AC line immediately. Check whether there is insulation problem between the AC inlet cable and the charging gun. Power on again. If the fault persists, please contact us.

Fault Numb	LCD Show	Handling method
0001	Emergency stop	If no fault occurs, please rotate the button clockwise to re set the charger.
0002	Over Voltage	Voltage has risen above an acceptable leve
0003	Under Voltage	Voltage has dropped below an acceptable level.
0004	Over Current	Over current protection device has tripped
0005	Over DC 6MA	Over leakage current protection device has tripped.
0006	Grond Failure	Ground fault circuit interrupter has been activated.
0007	Ecmu Error	Ecmu model self- check failure
0008	CP short	CE and PE short
0009	Relay Failure	Failure with Power relay
0010	Socket Lock Failure	Failure to lock or unlock socket connector

Fault Numb	LCD Show	Handling method
0011	Reader Failure	Failure with id Tag reader
0012	Weak Signal	Wireless communication device reports a weak signa
0013	Meter Failure	Failure to read power meter.
0014	High Temperature	Temperature inside Charge Point is too high.
0015	Other Error	Other type of error. More information in vendor Error Code

11. Quality Assurance

In the event of a defect during the warranty period, NTEC will provide free of charge service or replace the product with a new one.

Service and Repair

●During the warranty period, the customer shall provide the product purchase invoice and date. In addition, the trademark on the product shall be undamaged and legible. Otherwise, NTEC has the right to refuse to honor the quality guarantee.
●If the charger fails during the warranty period due to a defect in materials or workmanship, NTEC will, at its option, repair or replace the charger at no charge to the original end-user customer.
●The original end-user customer is responsible for shipping the charger to NTEC's service center for warranty service. NTEC will return the repaired or replacement charger to the original end-user customer at its own expense.

Exclusion of Liability

In the following circumstances, NTEC has the right to refuse to honor the quality guarantee:

- The free warranty period for the whole machine/components has expired.
- The device is damaged during transportation.
- The device is incorrectly installed, refitted or used.
- The device operates in harsh conditions beyond those described in this manual.
- The fault or damage is caused by the use of non-standard or non-NTEC components or software.
- The installation and use range are beyond the stipulations of relevant international standards.

- The damage is caused by unexpected natural factors.

For faulty products in any of the above cases, if the customer requests maintenance, paid maintenance service may be provided based on the judgment of NTEC.

12. Contact Information

In case of questions, please contact us.

BRIGHTVILLE HK LIMITED
Building A, Unit 3K,140 58th Street Brooklyn，NY 11220
1-855-916-0081
customerservice@brightvillehk.com