天 线 规 格 书
Antenna specification for approval

客户名称 Customer name	Shenzhen Zeqing Electronics Co.Ltd		
机型 Model	F8341-XHA		
天线频段 Antenna frequency	2.4GHZ		
天线功能 Antenna function	WIFI ANT		
天线材质 Antenna material	FPCB	FPC 颜色 FPC color	black
型号 model	SF906H-1B2-A		
料号 Material number	SF906H-1L24B-060-A		
客户料号 Customer Part Number			

索 沃 德 承 认 签 章 Ward accepted the signature		客 户 承 认 签 章 Client acknowledges signature	
结构 structure		采购 Purchase	
文控 Document control		结构 structure	
射频 radio frequency		工程 engineering	
审核 To examine		品质 QC	
承辦人 Responsible	李婷婷	审核 To examine	
日期 date 2024.10.11	盖章区 Seal area	日期 date 2024.10.11	盖章区 Seal area

一：

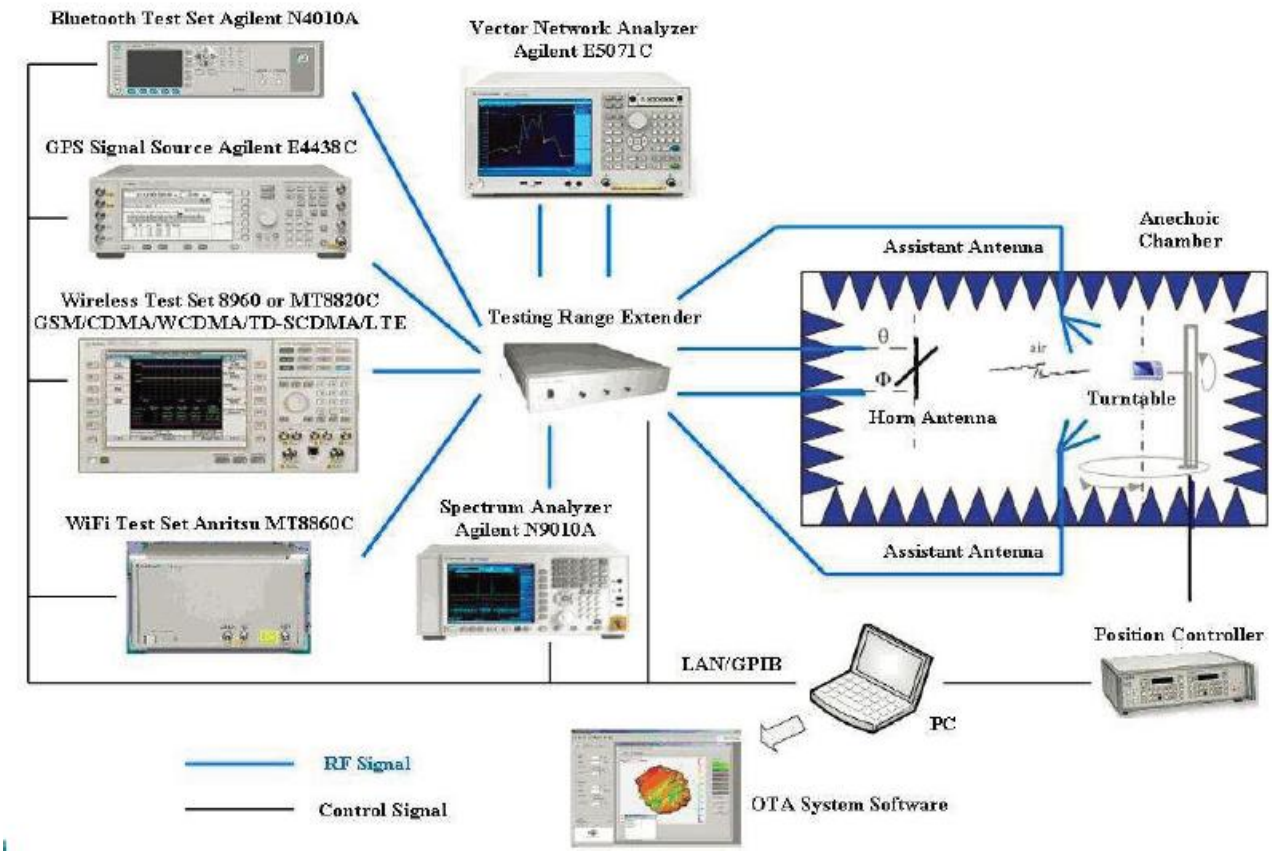
Bluetooth Test Set Agilent N4010A
Vector Network Analyzer
Agilent E5071C
GPS Signal Source Agilent E4438C
Anechoic
Chamber
Assistant Antenna
Wireless Test Set 8960 or MT8820C
GSM/CDMA/WCDMA/TD-SCDMA/LTE
Testing Range Extender
Horn Antenna
Turntable
Spectrum Analyzer
Agilent N9010A
WiFi Test Set Anritsu MT8860C
Assistant Antenna
Position Controller
LAN/GPIB
PC
RF Signal
Control Signal
OTA System Software

二

(1)Antenna performance

1. This approval sheet supports for MID project. FPC antennas include in this project. This report is for the performance of WIFI antenna.
2. Antenna shape size: Meet the requirement of MID
3. Antenna band: 2400MHz~2500MHz
4. Antenna material: Antenna material meet the requirement of MID
5. Adhesive performance: Adhesive performance meet the requirement of MID
6. Antenna performance meet the spec below:

Description	2.4GHZ~2.5GHz	Units
VSWR	≤2.0	
Average Antenna Gain	-0.23	dBi
Feed Impedance	50 ohms	
Operating Temperature	-40 to +85 deg C	
Polarization / Azimuth	Linear / Omni-directional	

(2)Mechanical Information

Mechanical Dimension	
Cable Length	060mm/BLACK
Description	WIFI antenna
Material	FPC
Coaxial Cable	50Ω/O.D.0.81mm
Environmental	
Operation Temperature	-40 to +85 deg C
Storage Temperature	-40 to +85 deg C

三：

(1)

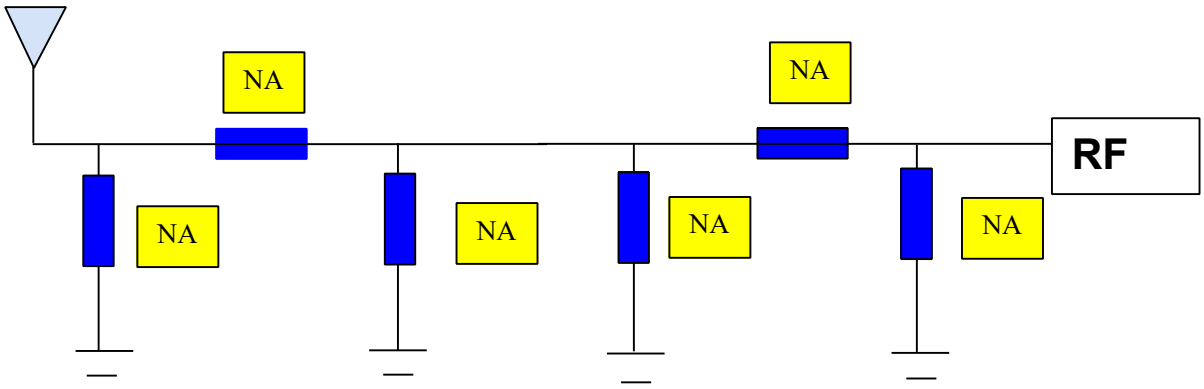

(2)

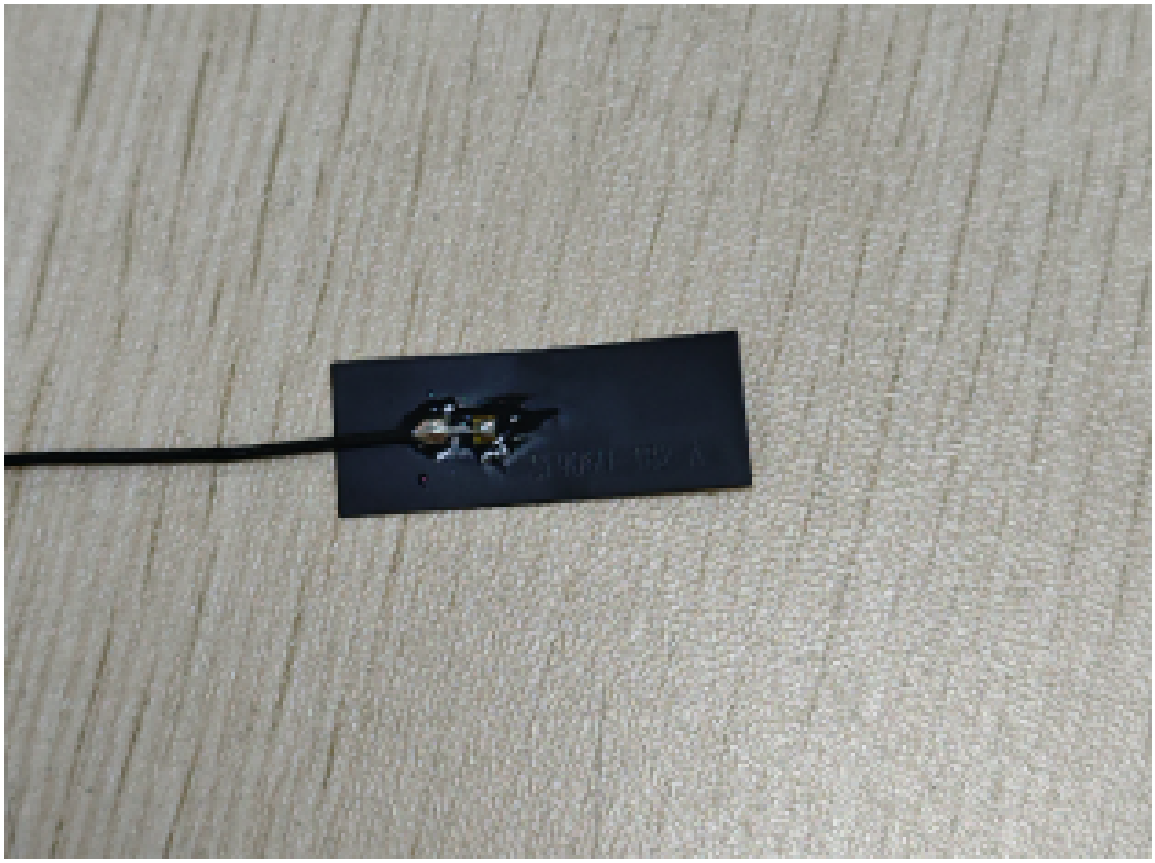

四

CH1 S11 LM log MAG
5 dB/ REF 0 dB
2 600.000 000 MHz
PRm
Cor
1:-5.4302 dB
2.3 GHz
2:-10.922 dB
2.4 GHz
3:-17.406 dB
2.45 GHz
4:-10.15 dB
2.5 GHz
START 2 000.000 000 MHz
STOP 3 000.000 000 MHz

Passive Test For 2.4Gwifi								
Freq	Effi	Effi	Gain	Gain	UHIS	DHIS	Max	Min
(MHz)	(%)	(dB)	(dBi)	(dBd)	(%)	(%)	(dB)	(dB)
2400	20.82	-6.82	-0.73	-2.88	7.655	13.161	-0.73	-21.5
2410	21.18	-6.74	-0.73	-2.88	7.799	13.38	-0.73	-22.01
2420	24.03	-6.19	-0.23	-2.38	8.81	15.221	-0.23	-22.14
2430	22.5	-6.48	-0.57	-2.72	8.222	14.281	-0.57	-21.75
2440	21.94	-6.59	-0.68	-2.83	7.891	14.046	-0.68	-20.37
2450	18.6	-7.31	-1.54	-3.69	6.669	11.93	-1.54	-21.26
2460	19.74	-7.05	-1.48	-3.63	7.1	12.636	-1.48	-21.34
2470	20.7	-6.84	-1.46	-3.61	7.67	13.033	-1.46	-19.91
2480	24.25	-6.15	-0.94	-3.09	9.27	14.982	-0.94	-17.25
2490	23.85	-6.22	-1.08	-3.23	9.357	14.497	-1.08	-17.93
2500	22.62	-6.46	-1.32	-3.47	9.1	13.515	-1.32	-19.96

五:3D pattern

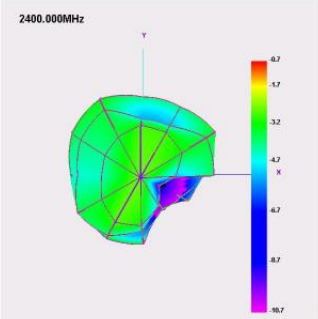

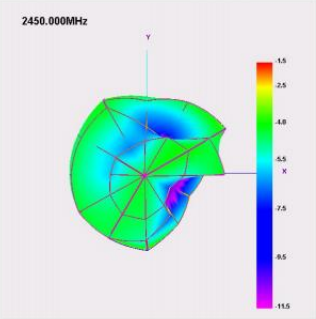

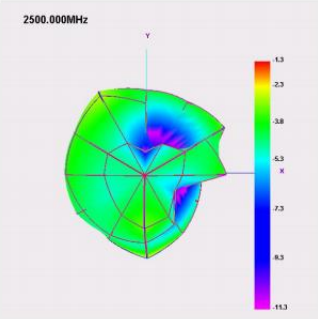
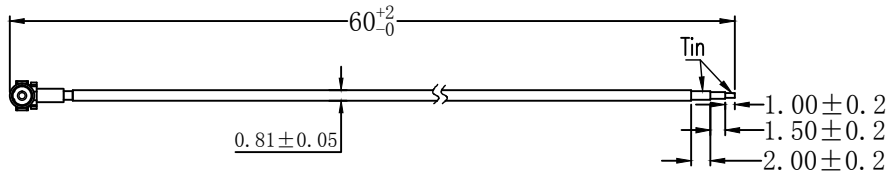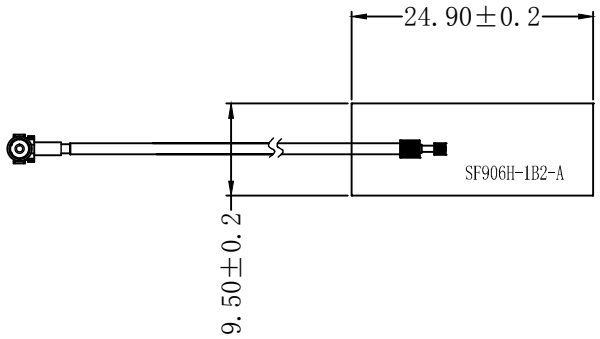
unit: mm