Six Self-test calibration

1.Horizontalprecisionself-test

（1) Find a flat wall, set up a platform 5 meters away from the wall, place the instrument on the platform, and then turn the V2 glass seat directly opposite the wall.
(2) After the instrument is turned on, mark A at the intersection of the horizontal line and the vertical line, and make a vertical line along A.
(3) Turn the instrument to 90 degrees in turn. After the instrument is flattened, the cross node is aligned at the vertical line and marked as points B, C and D respectively.
(4) Measure the distance between the two points with the largest distance in four points A, B, C and D h

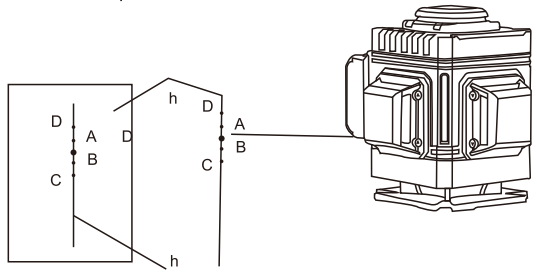

Seven Repairandmaintenance

1. Don't disassemble the instrument at will. If you have any questions, please contact our marketing department.
2. Do not drop, knock or vibrate the instrument, so as not to affect the accuracy and function of the instrument.
3. If you want to store the instrument for a long time, please remove the battery from the instrument.
4 Please charge at the specified time. Excessive charging will shorten the battery life.
5. Please use a soft cloth and neutral detergent to clean the surface of the instrument. The clean instrument should be thoroughly dried.
6. The instrument should be stored in a dry and dust-free place.

★User Save Union (please save this part properly)

● **Warranty card** During the warranty, the user must present the preservation link o f this card and the offcial invoice to confirm your warranty service.

User name

Sir/Madam:..... Age: .....

Name of the unit:

Occupation;□Student □Worker □Carpentry □Concrete□Renovate □Five metals □Hydropower engineering □Other

Address:___Omit____Market.....Road/street.....Howl___Postcode.....

Tel:.....Fax: .....Cell phones: .....

Product name:.....Date of purchase.....

Invoice Receipt Number:.....Purchaser name:.....

Address of the purchasing firm:.....

Business phone number..... The seal of the firm

※Please note that the conditions listed on the back are not warranted.

● **Receipt (please complete it and send it back)**

In order to ensure that you can enjoy the above warranty services, please fill in all the forms and send the "receipt" back to our company

User name

Sir/Madam:..... Age: .....

Name of the unit:

Occupation;□Student □Worker □Carpentry □Concrete□Renovate □Five metals □Hydropower engineering □Other

Address:___Omit____Market.....Road/street.....Howl___Postcode.....

Tel:.....Fax: .....Cell phones: .....

Product name:.....Date of purchase.....

Invoice Receipt Number:.....Purchaser name:.....

Address of the purchasing firm:.....

Business phone number..... The seal of the firm

The company has the final right to interpret the warranty regulations and related technical issues of the tools produced by the company!

3D/4Dwallstickerallinone

USER MANUAL

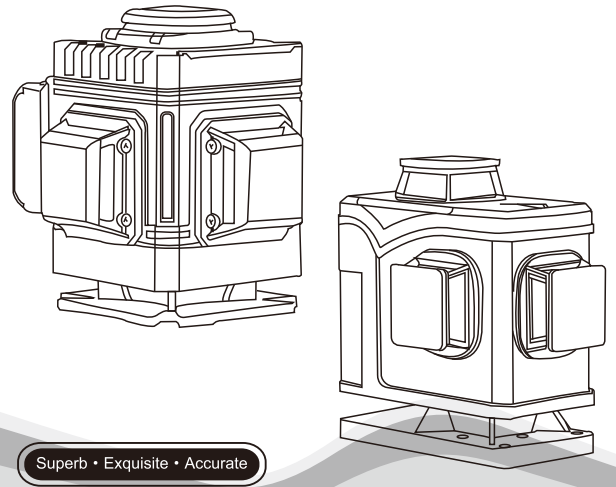

Superb • Exquisite • Accurate

PROFESSION LASER LEVEL

－Pleasereadthismanualcarefullybeforeuse.

One Featuresandfunctions

3D laser floor wall projection instrument can automatically level the visible laser horizontal and vertical lines separately or at the same time. It provides accurate horizontal and vertical benchmarks for indoor construction sampling and calibration, which is easy to operate and has a wide range of uses.
Features:
·Output 3 360° line lasers
·Form 6 cross laser cross lines (12 lines)
·It can be pasted with floor tiles, walls, and suspended ceilings, with an average spacing of 7mm.
·Both indoor and outdoor, you can choose a continuous laser or a pulse laser.
·≤3°Automatic Anping。 > 3°The beep calls the police.

tow Technicalspecifications

Technicalparameter	LdBlu green12ray	LdBlu green16ray
Lasersecondarytube	520/505nm	520/505nm
Precision	±1mm/7m	±1mm/7m
Operatingtemperature	-20°C~+40°C	-20°°C~+40°C
Workingdistance	25m	25m
Automaticallyleveltheangle	±3°	±3°

Three Usersafety

- Laser output mark is located at the output hole.
- Don't look directly at the laser light.
- Do not disassemble the instrument and carry out internal maintenance. It can only be repaired by a general authorized repair center.
- This instrument meets the safety standards of laser radiation.

Four Instrumentcharacteristics

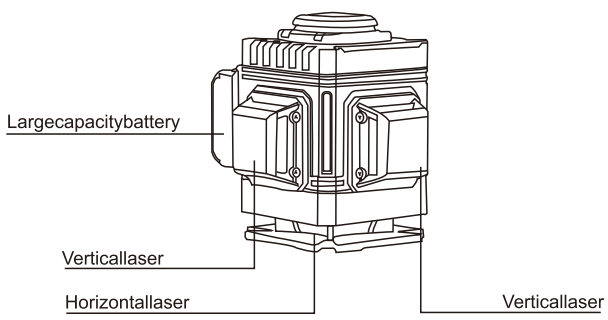

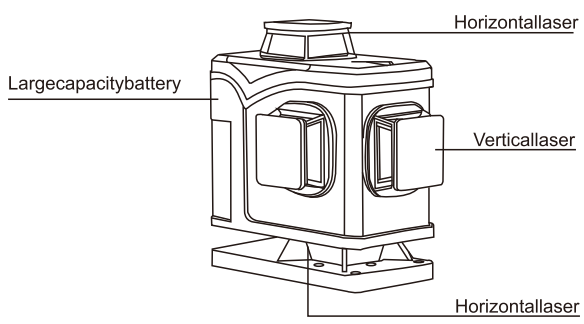

※Mainengine ※Hand-heldplasticbox ※Onlyremotecontro ※Base
※Upperwallbracket ※Elevatingplatform ※Charger ※ Onelithiumbattery

Five How-ToGuide

1.Use the charger

Plug the charger into the charging jack to charge the rechargeable battery. During charging, the indicator light is red, and when the battery is full, the indicator light will change from red to green.

Note: a) When possible, wait until the battery runs out of power (the flashing indicator light of the instrument indicates that the battery has been exhausted) and then charging the battery can extend the service life of the battery;
B) The instrument needs to be charged every 2 to 3 months from the date of leaving the factory.

2.Placementofinstruments

a) It can be placed directly on the horizontal platform (if the laser line flashes with beeping indicates that the instrument has exceeded the leveling range, the instrument should be adjusted to flatten it)
b) the thread at the bottom of the general instrument is connected to the tripod
c) Easily wire on the wall through the upper wall bracket
d) Adjust the high and low horizontal line through the lifting platform.

3.PowerOn/PowerOff

The lock is tightly opened, the instrument is turned on, and the power indicator light is on.
The lock is closed, the instrument is turned of and the power indicator light is of.

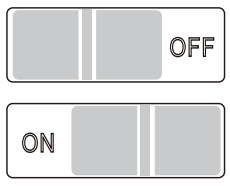

FCC Warning

This device complies with Part 15 of the FCC Rules. Operation is subject to the following two conditions:
(1) This device may not cause harmful interference, and (2) this device must accept any interference received, including interference that may cause undesired operation.

NOTE 1: This equipment has been tested and found to comply with the limits for a Class B digital device, pursuant to part 15 of the FCC Rules. These limits are designed to provide reasonable protection against harmful interference in a residential installation. This equipment generates, uses and can radiate radio frequency energy and, if not installed and used in accordance with the instructions, may cause harmful interference to radio communications. However, there is no guarantee that interference will not occur in a particular installation. If this equipment does cause harmful interference to radio or television reception, which can be determined by turning the equipment off and on, the user is encouraged to try to correct the interference by one or more of the following measures:
- Reorient or relocate the receiving antenna.
- Increase the separation between the equipment and receiver.
-Connect the equipment into an outlet on a circuit different from that to which the receiver is connected.
-Consult the dealer or an experienced radio/TV technician for help.

NOTE 2: Any changes or modifications to this unit not expressly approved by the party responsible for compliance could void the user's authority to operate the equipment.

The device has been evaluated to meet general RF exposure requirement. The device can be used in portable exposure condition without restriction.