CALCA®
ADVANCED PRINTING SYSTEM

CE

CALCA STAR SERIES
DTF Printer

User Manual

DTF-STXP-13H2-US

Thank you very much for choosing our CALCA brand series DTF printer, please read the manual carefully, including the operation and maintenance to ensure the best output and the lifetime of the machine.

CONTENT

About DTF.....5
Specifications.....6
I. Notice on Safety Using.....7
1.1 Risks migh present.....7
1.2 Symbols.....7
1.3 Safety.....7
1.3.1 Safe use of the appliance.....7
1.3.2 Other prohibitions.....7
1.3.3 Caution.....8
1.4 Notice before starting it.....8
1.4.1 Placement instructions.....8
1.4.2 Power connection instructions.....8
1.4.3 Precautions for operation.....9
II. Printer's Parts Identification.....11
2.1 Printer body.....11
2.1.1 Front views.....11
2.1.2 Right side views.....12
2.1.3 Left side views.....13
2.1.4 Rear views.....14
2.1.5 Right cover inside diagram.....15
2.2 Operation panel diagram.....16
2.3 Carriage diagram.....17
III. Printer Installation.....18
3.1 Installation precautions.....18
3.2 Printer unpacking.....18
3.3 Media loading.....19

3.4 Inject ink 21
3.5 Turn on the printer 21
3.6 Turn off the printer 22
IV. IP Setting And Calibration Tool Tutorial 23
4.1 Computer configuration requirements 23
4.2 System data transmission 23
4.3 Print setting 24
4.4 Nozzle test and cleaning 24
4.5 Receive the printing data from the computer 25
4.6 Bi direction calibration 25
4.7 Step calibration 27
V. CALCA DTF Fairy Rip Software Operation 28
VI. Printheads Calibration Guide 29
6.1 Calibration steps 29
6.1.1 Calibration sequence 29
6.1.2 Physical calibration 29
6.1.3 Software calibration 29
6.2 Calibration interface 30
6.2.1 Main interface 30
6.3 Calibration instruction 31
6.3.1 Print head installation 31
6.3.2 Nozzle stitching 35
6.3.3 Step calibration 36
6.3.4 Offset calibration 37
6.3.5 Bi direction calibration 41
VII. Troubleshooting 42
7.1 Error information & solution 42
7.2 Exploded View Board 44

7.2.1 CALCA mainboard 44
7.2.2 CALCA head board 46
VIII. Maintenance 48
8.1 Remarks 48
8.2 Maintenance overview 48
8.3 Routine checking 49
8.4 Day/weekly/monthly maintenance 49
8.4.1 Daily maintenance 49
8.4.2 Weekly maintenance 50
8.4.3 Monthly maintenance 51
8.4.4 As needed 51
8.4.5 Long-term storage (1-2 weeks) 51
8.4.6 Long-term storage (2+ weeks) 51
8.4.7 Routine maintenance form 53
8.5 Wearing parts maintenance 53
8.5.1 Nozzle maintenance 54
8.5.2 Ink station maintenance 55
8.5.3 Wiper maintenance 56
IX. Warranty 57

About DTF

Direct Transfer Printing is a revolutionary new printing technique that's more affordable and accessible compared to DTG, screen printing, sublimation or laser white toner transfers.

What Sets DTF Apart from Other Transfers?

- √ A great option for small orders.
- √ No cutting and weeding required.
- √ Crisp, defined edges and images from start to finish.
- √ Low cost on waste.
- √ Low investment – high reward (Print Cost: $0.007/inch²).

Works on Most any Fabrics

DTG technology works best on cotton pre-treated fabrics while DTF opens the door to a wide range of choices and is capable of printing onto non-treated cotton, silk, polyester, denim, nylon, leather, 50/50

1 Create your design

2 Printing

3 Shaking powder

4 Bake

5 Heat Press

6 Finishing

Specifications

13inch (330mm) Maximum print width

CMYK+WW Ink System, Textile Pigment Ink, 500ml per color ink bottle capacity

Thickness: 0.06in to 0.24in (1.5mm to 6mm) Adjustable

Dual Epson F1080-A1 (XP-600) printheads

Maximum Roll Weight: 396lbs (20kg)

Media Heater: Pre / Rear Heater (Can be controlled separately)

Printing Speed: 6 pass: 5m²/h; 8 pass: 3m²/h

Printing Resolution: 720 x 1080dpi, 720 x 1440dpi

Printing Software: CALCA DTF Fairy RIP Software (CADLINK is optional)

Print Head Cleaning: Automatic

Package: Custom-made tough and rugged flight case, which offers the best protection for your DTF printer.

Machine Size: 980mm x 640mm x 520mm (38.6in x 25in x 20.5in)

Machine Weight: 90kg (198lbs)

Packing Size: 1100mm x 850mm x 670mm (43.3in x 33.4in x 26.4in)

Gross Weight: 120kg (265lbs)

Requirements:

> Working Power Supply: AC 110V ~220V, 50HZ / 60HZ, 1 phase.

> Current: 5.5A (220V), 11A (110V)

> Operating System: XP / Win7 / Win10

> Temperature control set to 68°F - 95°F (20°C - 35°C) and 45 - 65%humidity.

I. Notice on Safety Using

1.1 Risks migh present

Read the instructions carefully as they contain important information regarding proper, efficient and safe installation, use and maintenance of the unit.
The installation of this unit must be carried out in accordance with the manufacturer's instructions.
Switch off the unit in case of failure or malfunction and contact your distributor for service information.

1.2 Symbols

STOP This symbol informs about a situation where a safety risk might be at hand. Given instructions are mandatory in order to prevent injury.

This symbol informs about the right way to perform in order to prevent bad results, appliance damages or hazardous situations.

This symbol informs about recommendations and hints that help to get the best performance out of the equipment.

1.3 Safety

1.3.1 Safe use of the appliance

For your safety. Do not store or use gasoline or other flammable vapors or liquids in the vicinity of this or any other appliance.

1.3.2 Other prohibitions

Using any parts other than genuine CALCA approved manufactured parts can void the warranty.

Improper installation, adjustment, alteration, service or maintenance can cause property damage or major injury. Read the installation and

operating instructions thoroughly before installing or servicing this equipment.

1.3.3 Caution

CAUTION

Users must pay attention to content have this mark; it might be caused by misoperation.

1.4 Notice before starting it

This machine is a high voltage equipment, in order to use the machine better please be aware of following specification.

1.4.1 Placement instructions

Installation And Placement

① The equipment should be placed in a dry and ventilated environment

② The equipment must be placed horizontally

③ Keep your computer system away from potential sources of electromagnetic interference, such as a speaker or wireless telephone set.

1.4.2 Power connection instructions

Electricity Parameters

Rated voltage: AC110V ~ 220 V, 1 phase

Rated current: 11A / 5.5A, 1200W

Rated power: 1200W

The access power must be consistent with the rated power of the equipment, and the guage number of the access power supply line must meet the rated requirements.

Please only use the power type identified on the printer's label.

Do not use a damaged or broken power cord. If you use an additional power cord, remember that the total amperes of the device inserted in the additional

power cord should not exceed the rated ampere of the power supply. In addition, please remember that the total ampere of all devices inserted wall outlet should not exceed the amp rating of the wall outlet.

Ground Connection

Before the power-on, the ground wire must be connected properly.

Those who are sensitive to static electricity should take protective measures when operating the equipment.

Those who are allergic to static electricity should wear an anti-static wristband or anti-static gloves.

NOTE: The machine must be inserted in the ground wire. In dry air conditions, static can be a dangerous issue, especially when using PET media (and moreso when the paper feeding speed is very fast).
Electrostatic charge can cause damage to the printer and the board.
The grounding wire is the best method to avoid this. During operation, ensure that the user's hands have been discharged (through contact with ground or electrostatic equipment). Otherwise, damage may occur to the board or nozzle.

1.4.3 Precautions for operation

- The printer must be monitored during operation.
- Do not unplug the printer or other relevant data cables until the machine is switched off.
- Do not unplug the print cables or power cable while the machine is on or in operation, as it may cause damage to the main board.
- Please do not place tools or other items on the printing platform or cover plate of the machine, so as to avoid unnecessary losses caused by improper cleaning before the machine is running.

- Before handling your printer, make sure that your printing carriage is fixed in the primary position.
- Perform regular maintenance on the printer to reduce the impact of dust and ink on the printer.

II. Printer's Parts Identification

2.1 Printer body

2.1.1 Front views

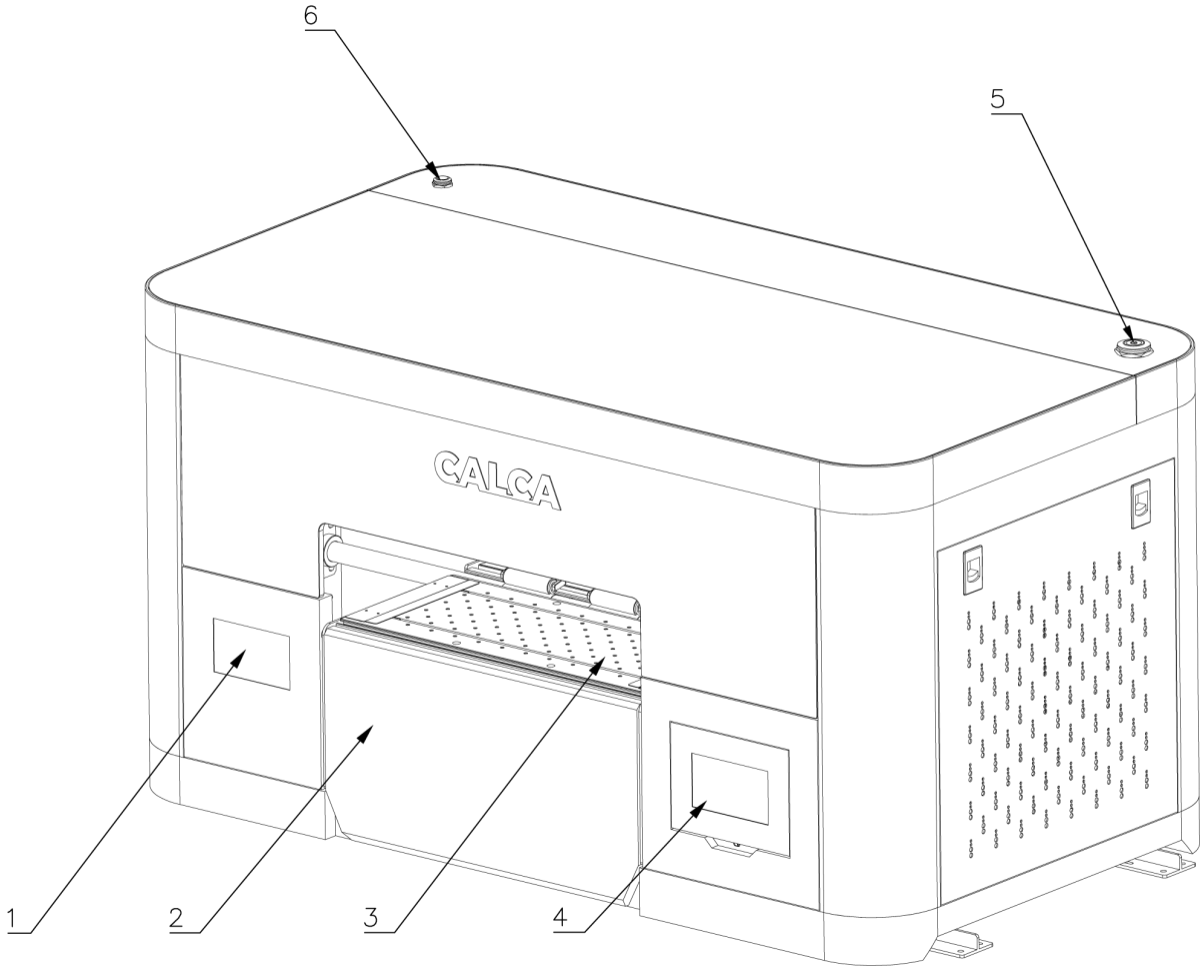

1. **Platform heating air suction control panel:** Set the front, middle and rear heating of the platform.
2. **Material drying platform :** Dry the material after printing.
3. **Printing platform:** The material is printed on the platform.
4. **Operation panel:** To adjust and set the operation and internal configurations of the printer. ("Operation panel diagram" On section 2.2).
5. **Emergency stop switch:** Pressing when stopped in an emergency.
6. **LED switch:** Printing platform light.

2.1.2 Right side views

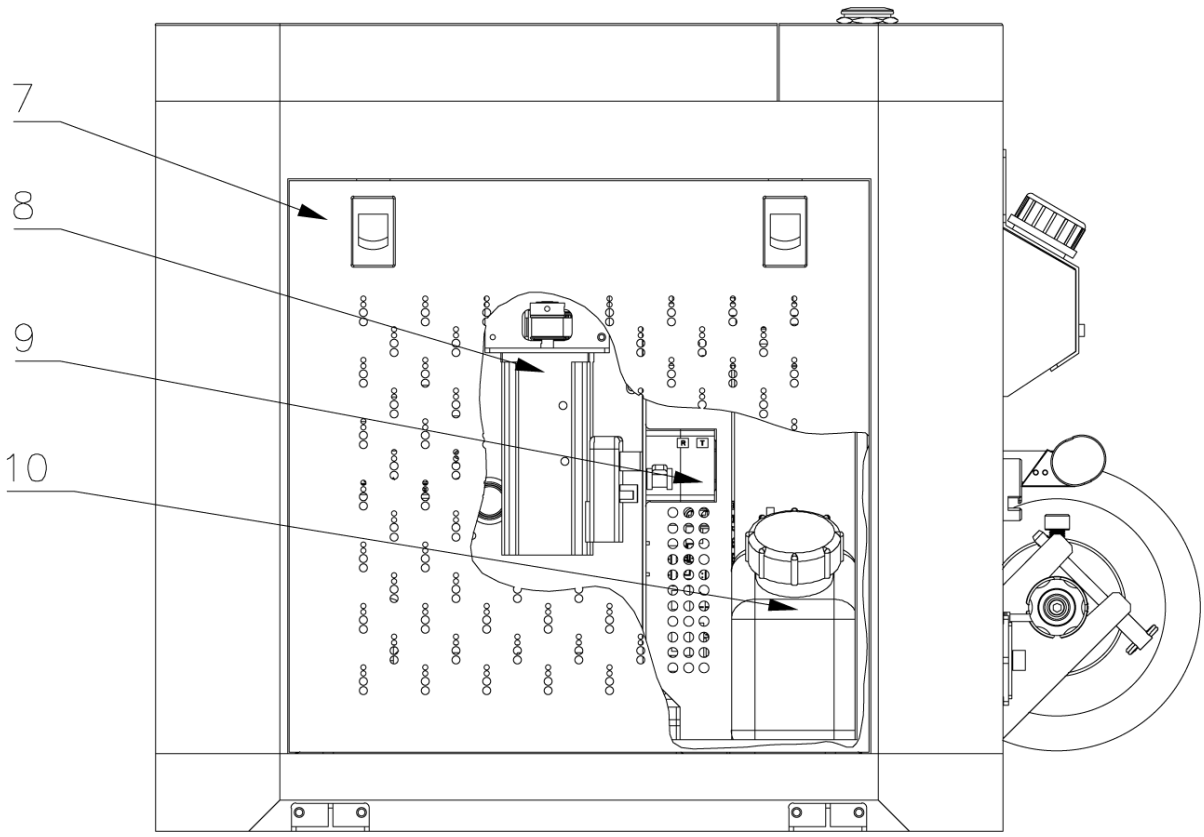

7. **Right door**.
8. **X axis motor:** X axis driving electric unit.
9. **Protection switch:** Leakage protection device.
10. **Waste ink bottle:** A bottle for storing waste ink.

2.1.3 Left side views

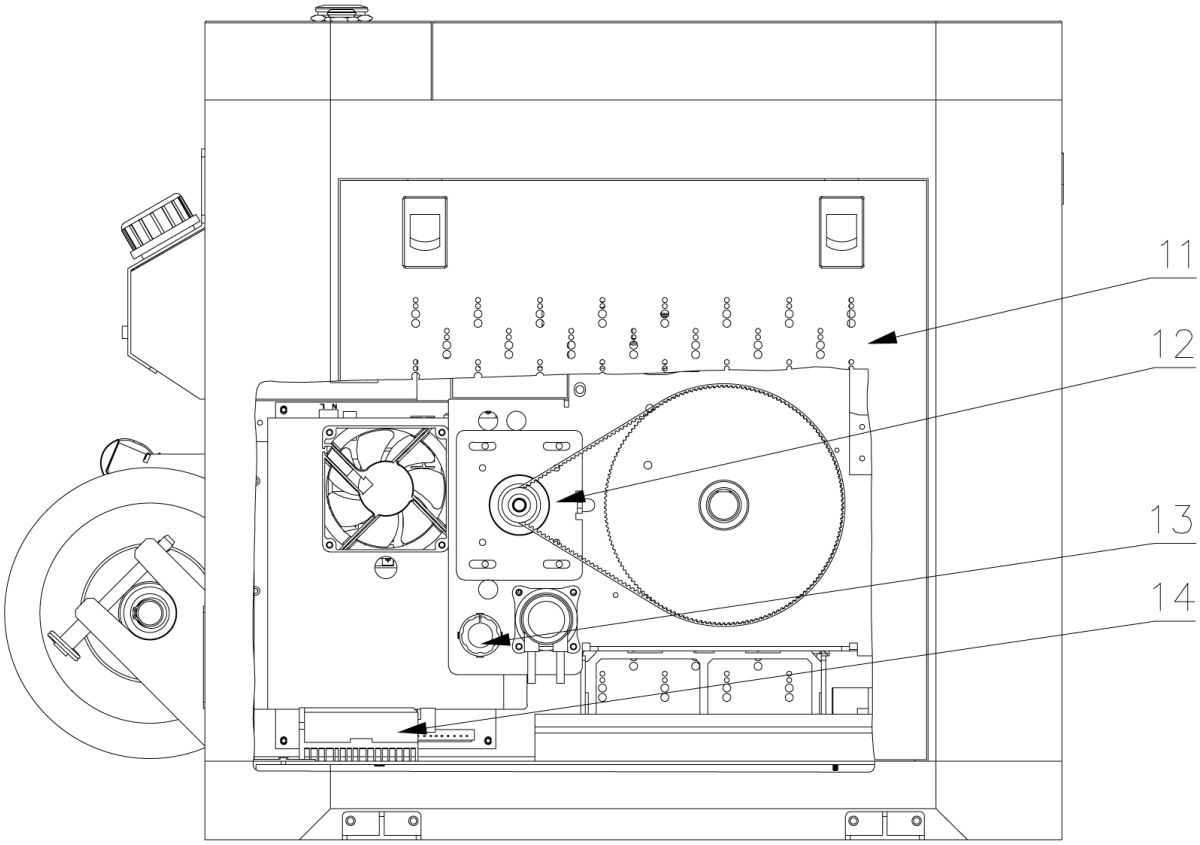

11. Left door.

12. Y-axis motor.

13. White ink cycle speed control knob.

14. Y-axis motor driver.

2.1.4 Rear views

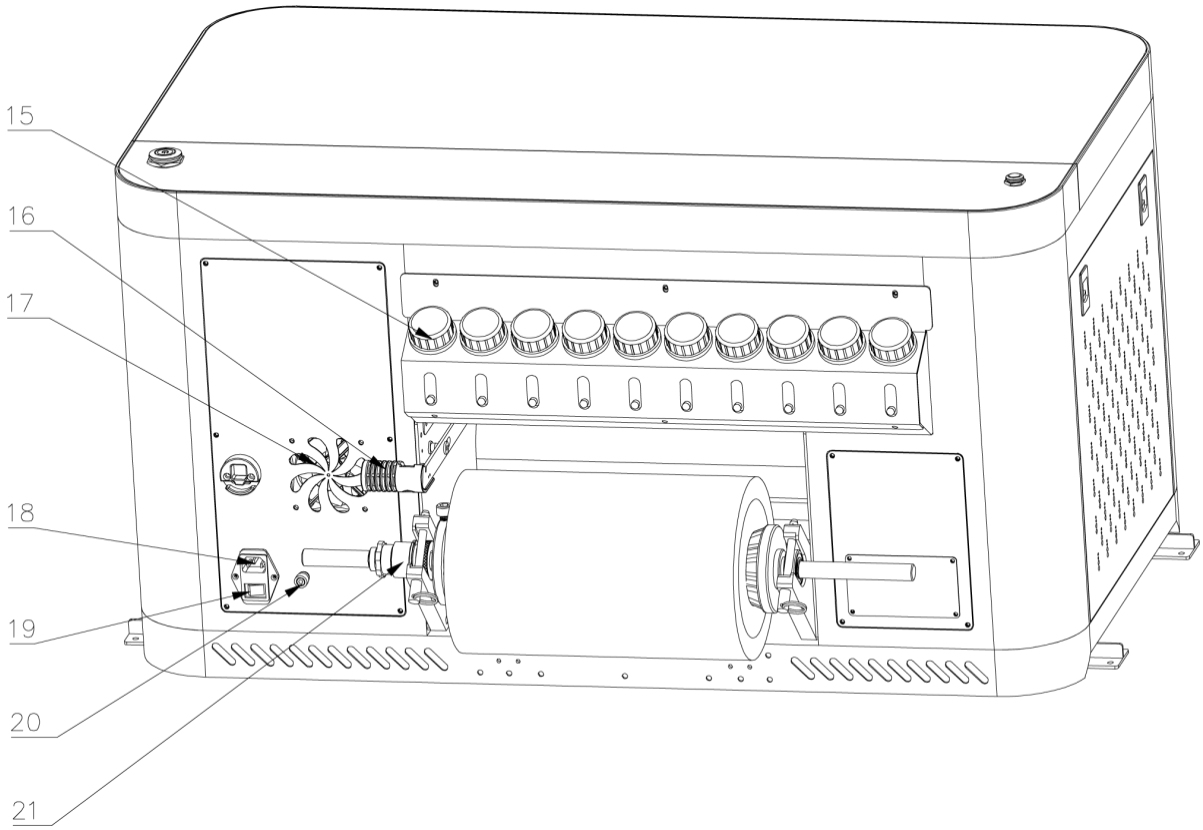

15. Bulk ink supply bottle: A device for storing ink.

16. Media pressing handle: Lift the wheel to install the printing materials.

17. Heat dissipation fan: Do not block the air outlet when the machine is working.

18. Switch control of the main power supply.

19. The main power supply plug.

20. Ground wire terminal column: External grounding wire to ensure that the machine is free. From static electricity or external electric field interference.

21. Feeder shaft.

2.1.5 Right cover inside diagram

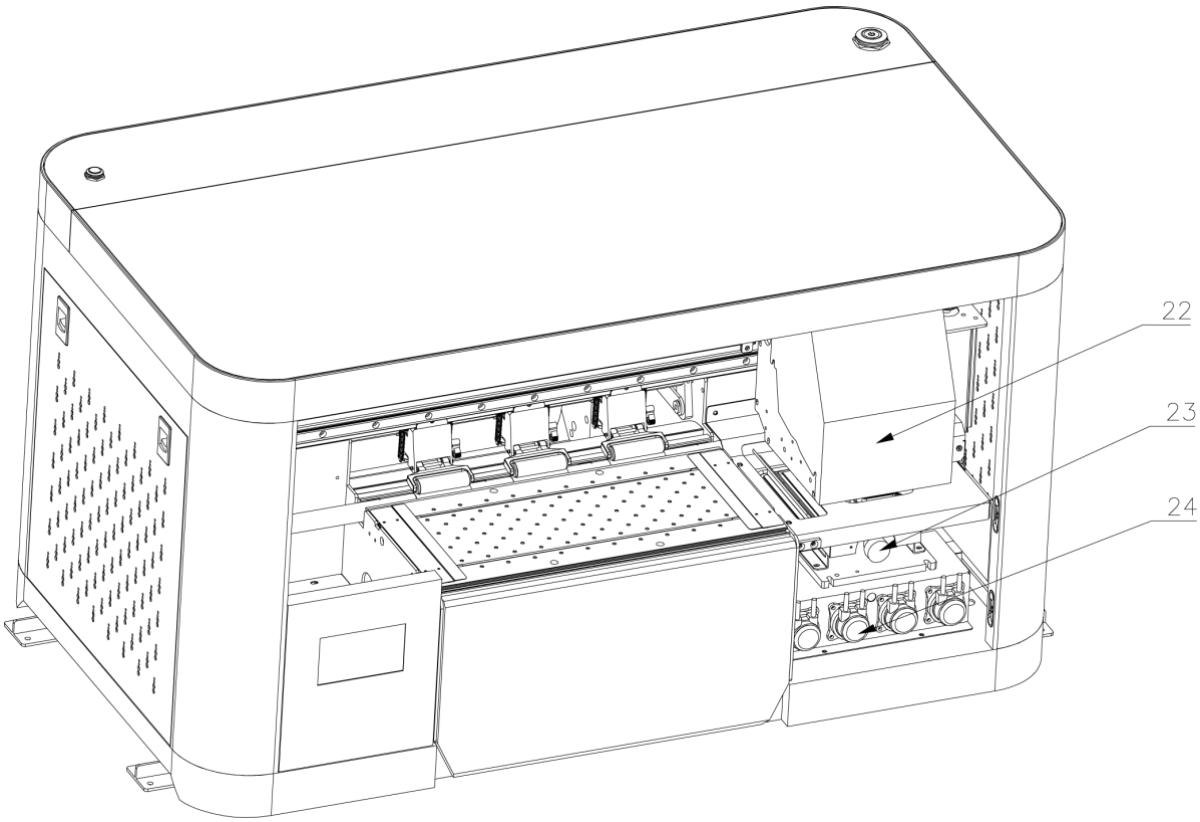

22. Carriage unit: Please refer to "Carriage Diagram" section 2.3

23. Ink station: The ink pumping and moisturizing device of the nozzle.

When the machine is not working, the cap top must be used to seal the nozzle.

24. Ink pumping system: Elements for pumping ink at ink station.

2.2 Operation panel diagram

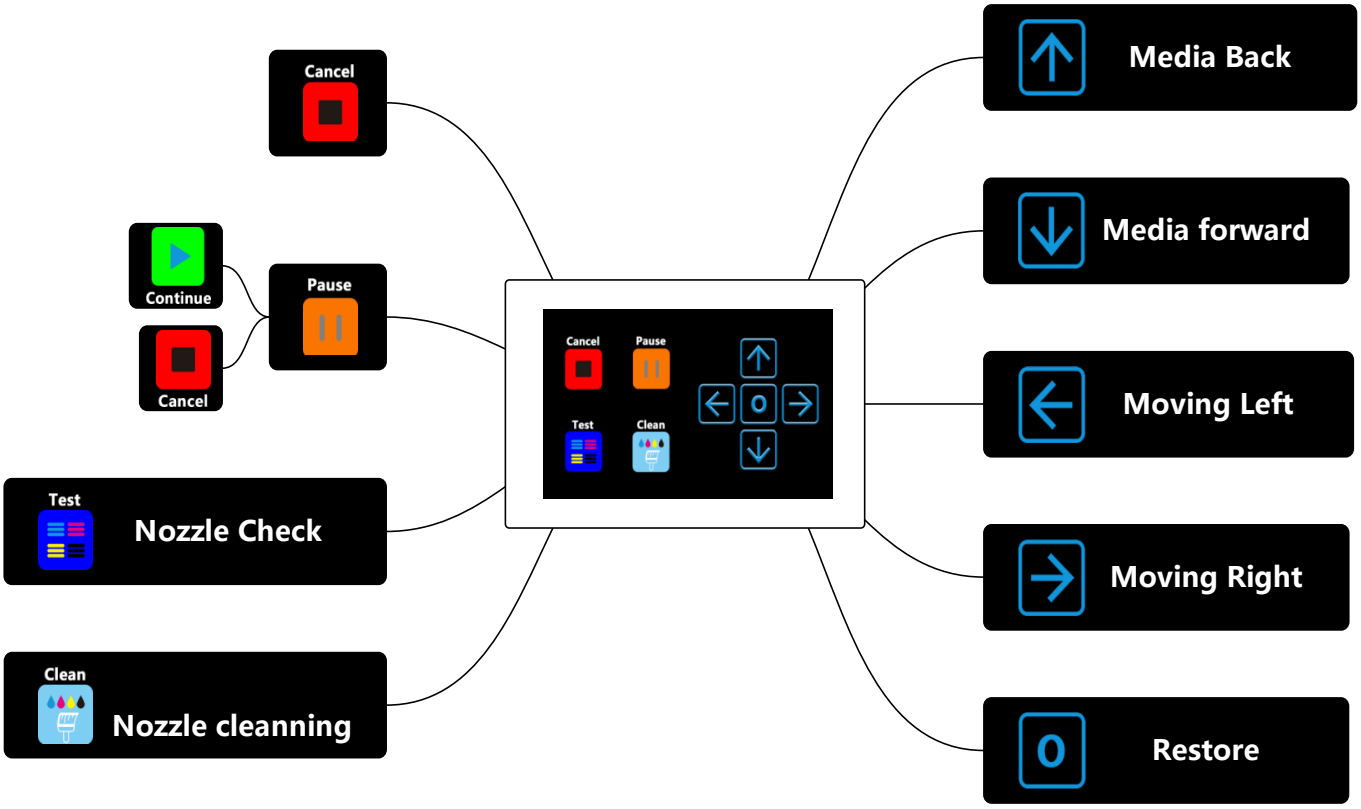

2.3 Carriage diagram

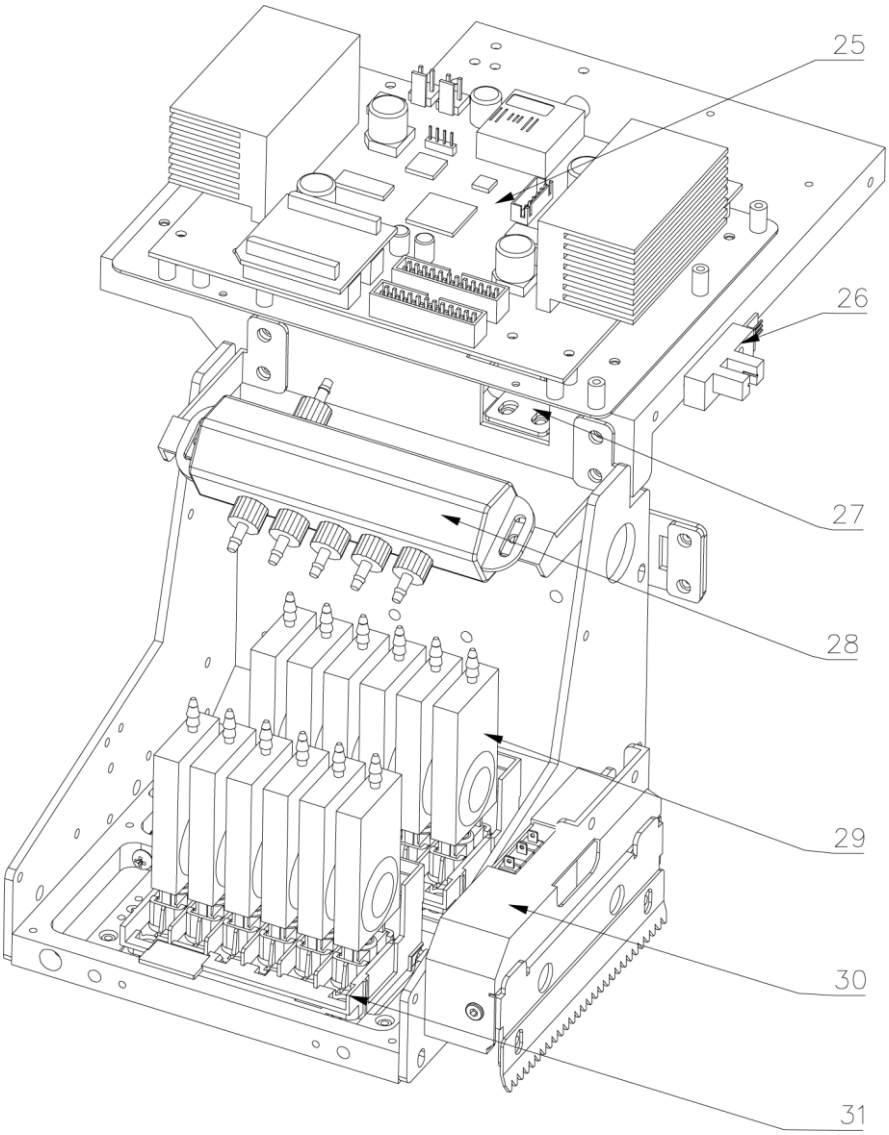

25. **Print head board:** Board driving printer jet ink. Machine online, data transmission, inkjet system.
26. **X axis origin sensor**.
27. **Linear encoder:** X axis grating scale reading element.
28. **White ink shunt.**
29. **Ink damper:** Ensure the continuous supply of ink and filter impurities.
30. **Anti-Collision device:** Prevents printhead collision.

31. Print head: Ink output, the nozzle status directly affects the printing effect.

III. Printer Installation

3.1 Installation precautions

1. Before unpacking, check if there is damage on the packing and the machine during transportation.
2. After unpacking, check if the service parts are correct as the packing list.
3. The installing place should be provided enough space for operating and free of dust, no vapor, no corrosive gas, no combustible or explosive substance around. Keep the machine away from wind blowing place, otherwise will affect printing quality.

Notice: Please move carefully since it is a precision equipment.

3.2 Printer unpacking

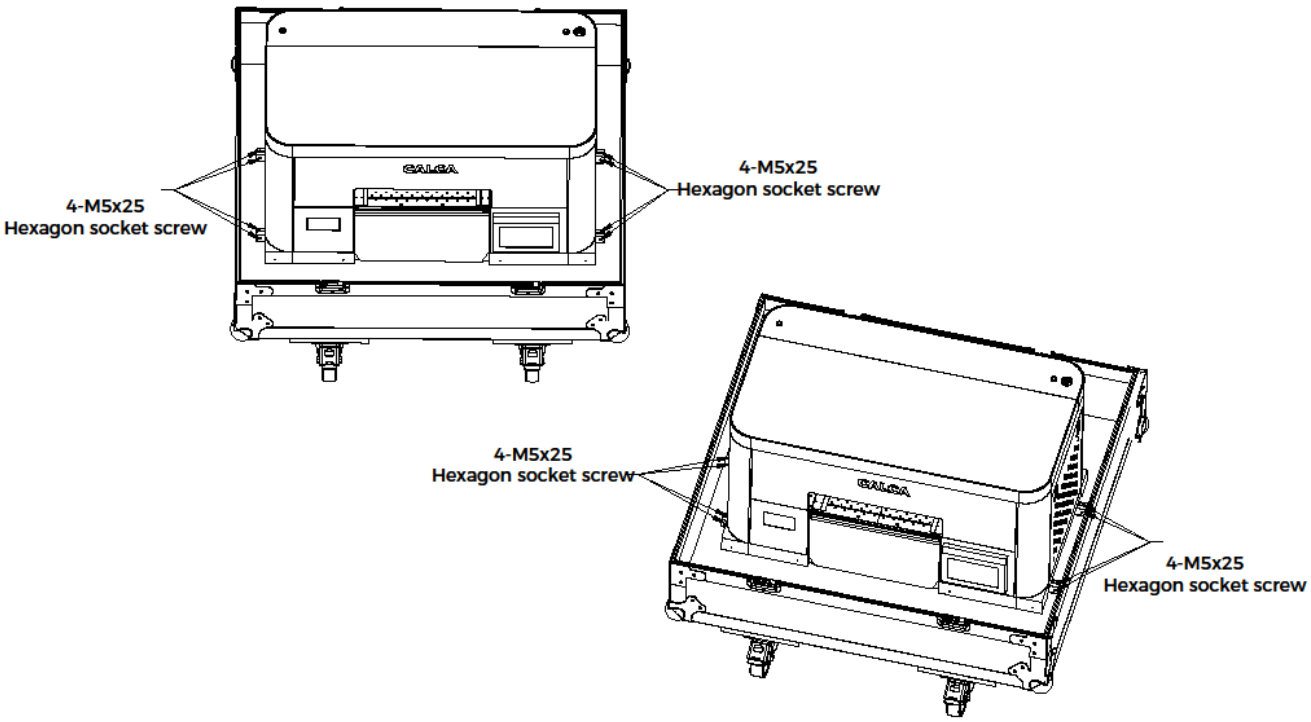

Open the flight case and remove all the screws that fix the lifting rod of the

machine on the bottom plate of the case. (You can use the flight case to display your machine.)

3.3 Media loading

Loosen the 4 screws pointed by the red arrows and remove the flange in the direction of the yellow arrows.

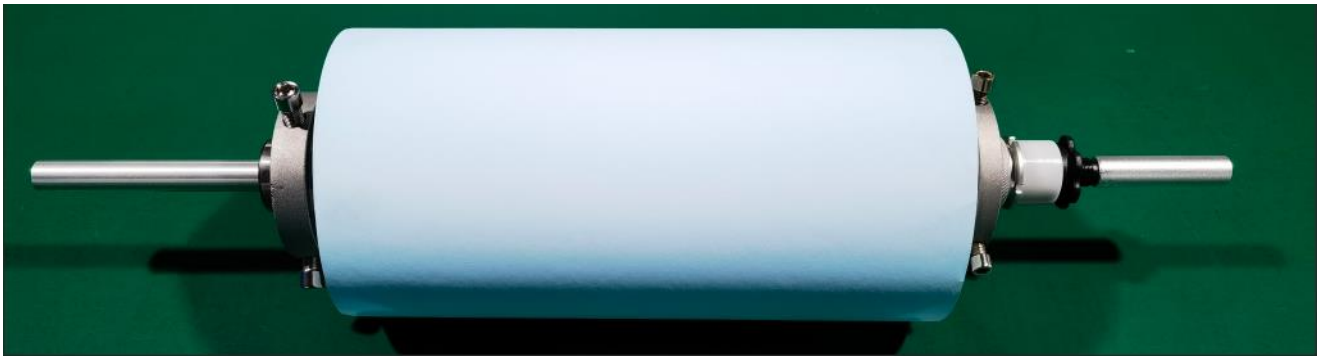

Loading the film roll.

The flange should not exceed the position marked by the dotted line. After loading the media, tighten the screws pointed by the red arrows.

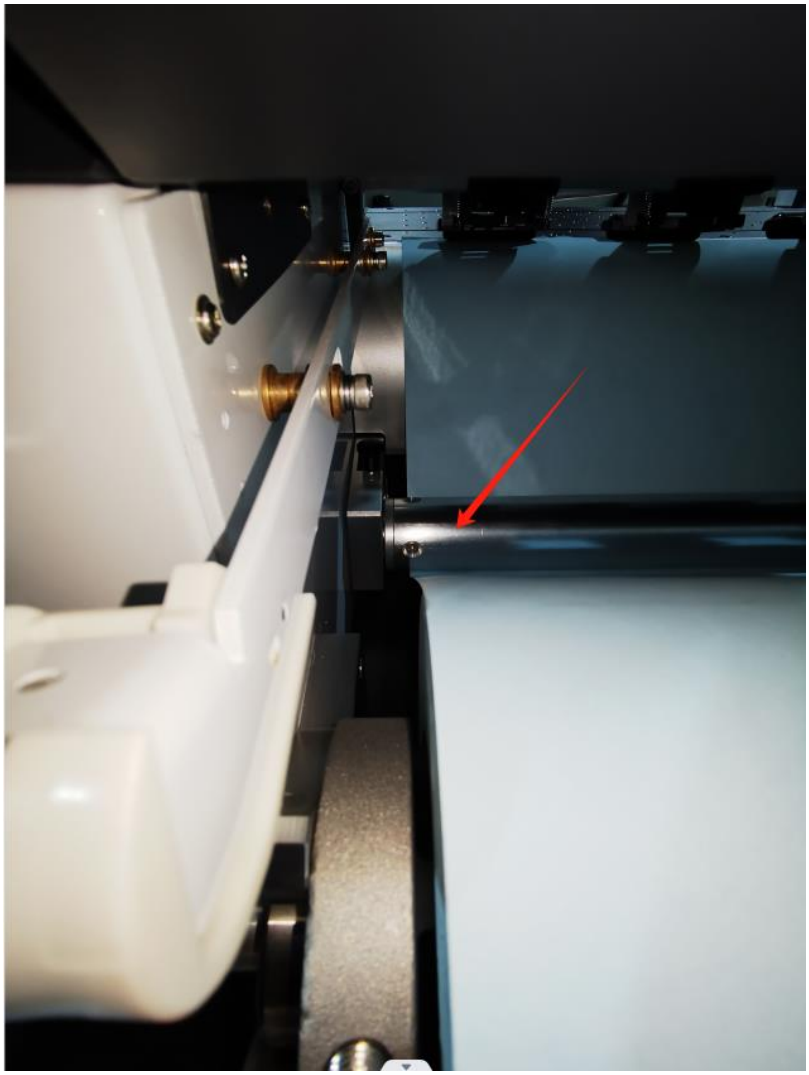

The media passes under the paper platen lever indicated by the arrow and enters the printing platform.

Usable Size

Maximum print width: 13in (330mm)

Maximum thickness: 0.05in (1.3mm)

Roll outer diameter: 5.9in (150mm)

Printing media core diameter: 3 inches

Printing media weight: 44lbs (20kg) or less

Media heater: Pre/rear heater (Can be controlled separately)

Cautions when handling DTF printing media:

- Please use recommended media. Contact CALCA sales for recommended media.
- Be aware of expansion and contraction of media from temperature and humidity.
  After opening an unopened media, leave the media for approximately 30 minutes to adjust to environments.
- Do not use media with folds, scratches, tears, curvatures, winding curl and weaving.
- Do not leave a roll media set in the product for a long time. The media can be curled becoming unsuitable for printing.
  When not using for a long time, remove the roll media and store in its original package box.

3.4 Inject ink

Put the ink into the ink bottle according to the instructions on the label, note that the color of the ink needs to be the same as the color of the corresponding label on the main ink bottle.

3.5 Turn on the printer

	Ensure that the circuit breaker kept in ON. Rear power switch on the right side of the printer. Reset - Press Before Switching On. Test - Push Monthly.

	Keep the emergency switch standby.
	Turn on Always use the power switch to turn the printer off (rear power switch on the right side of the printer). Do not unplug the printer or other relevant data cables until the machine is switched off.

3.6 Turn off the printer

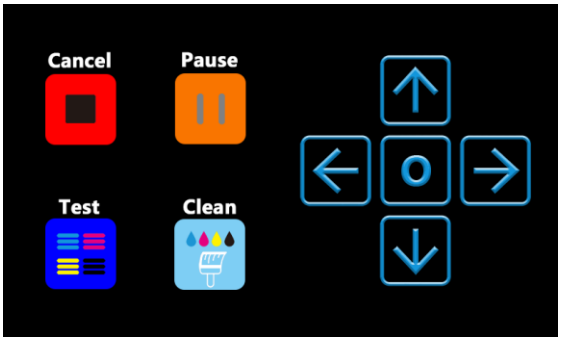

1. Click the origin .

2. Shut down the main power supply.

IV. IP Setting And Calibration Tool Tutorial

4.1 Computer configuration requirements

Configuration List		
1	System	WIN7/10/11 64 bits
2	Processor	Intel Core 10gen I5 CPU or above
3	Memory	8GB or above
4	Hard disc	500GB above, SSD recommended.
5	Chip set	INTEL
6	Data transmission	1000M Ethernet port

4.2 System data transmission

A 1000M Ethernet port is required to connect the data transmission of the printer to the computer.

Computer network IP: 192.168.125.92 Main board IP: 192.168.125.64

4.3 Print setting

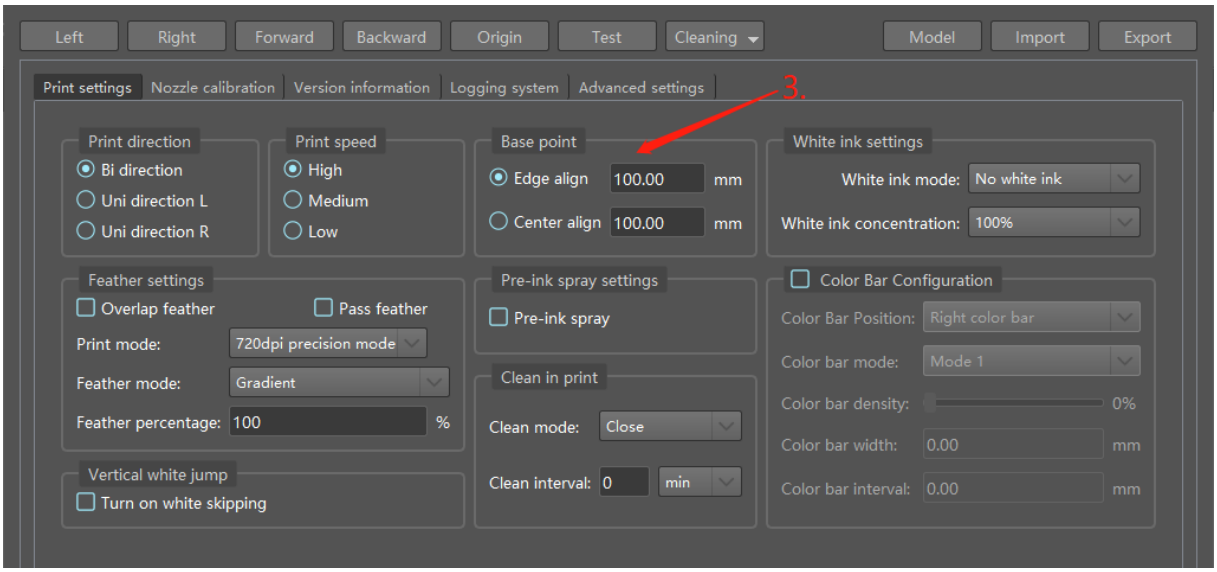

Adjust the positioning parameters so that the picture is correctly printed in viewing.

4.4 Nozzle test and cleaning

Clicking this button on the operation panel, the nozzles will print the following patterns:

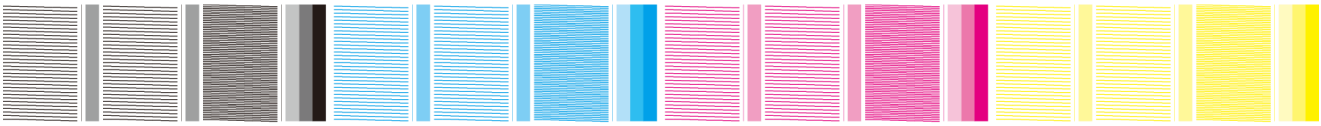

They show the perfect state of the nozzles.

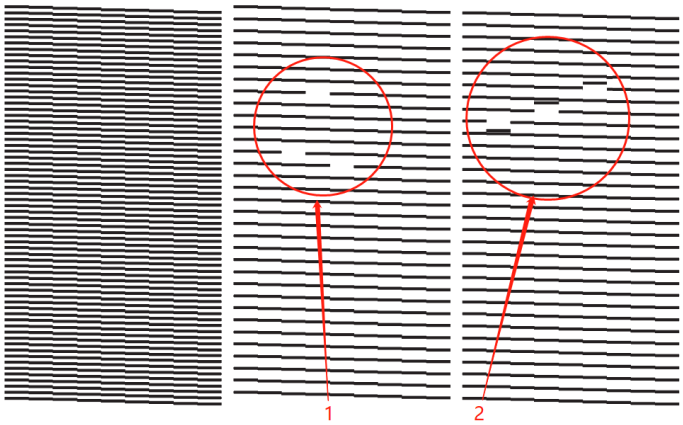

Figure 1 shows the printing blank, and Figure 2 shows the deviation.

You need to clean the nozzles. Please click on the operation panel, click , clean the nozzles, test nozzles again. If something wrong with the nozzle test, please contact your engineer for a check.

4.5 Receive the printing data from the computer

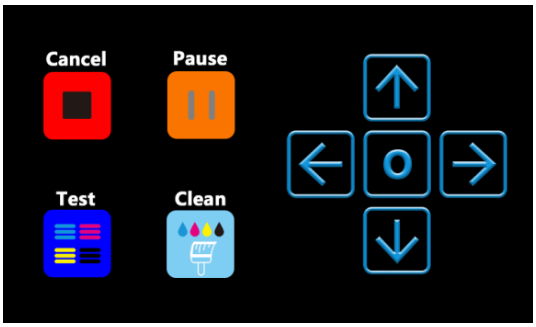

Operation Panel

LOGO

When the operation panel displays the operating interface rather than continuously showing the LOGO, the printer is available for your operation.

4.6 Bi direction calibration

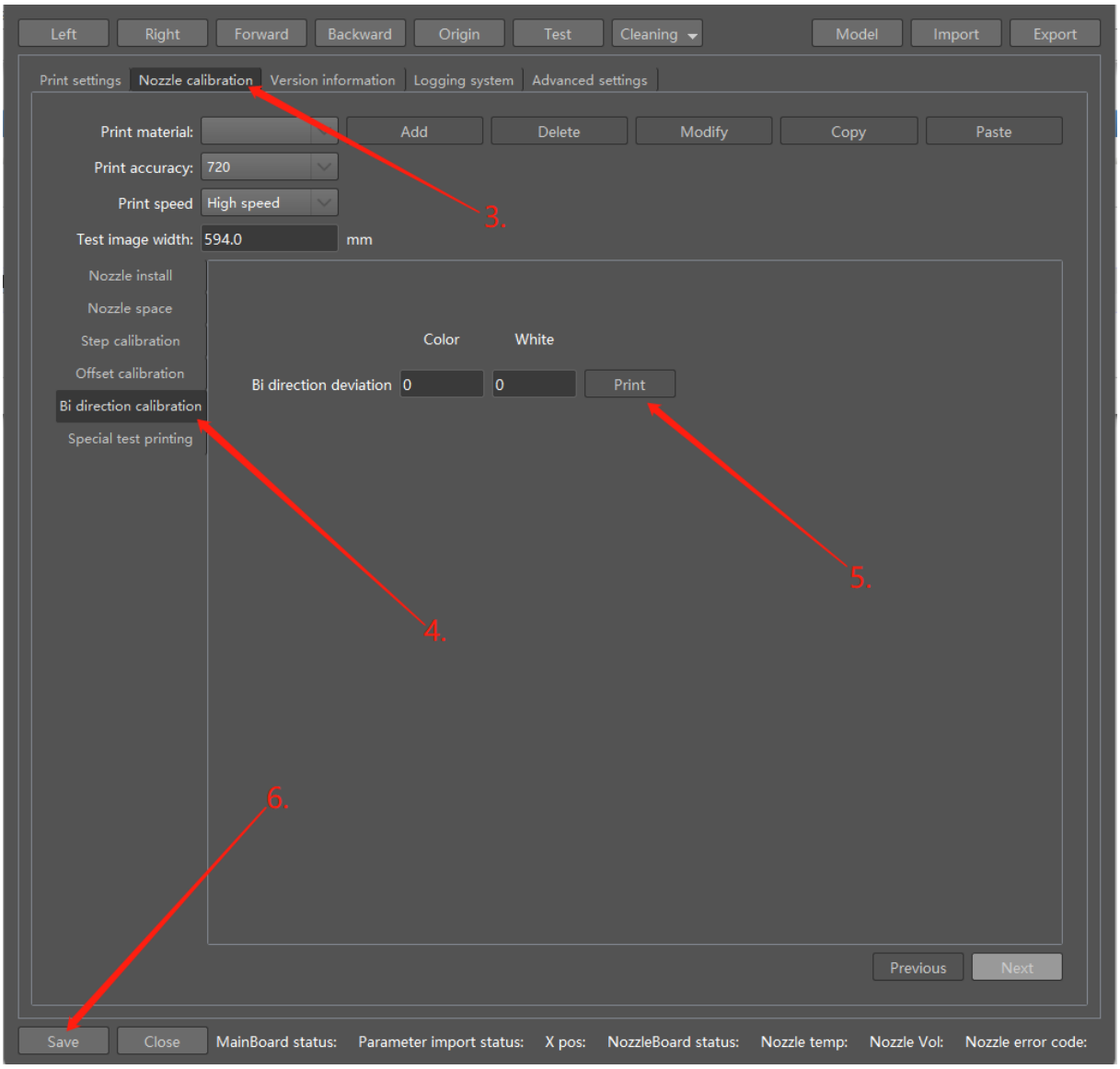

Enter the printer setup interface and print the following calibration test:

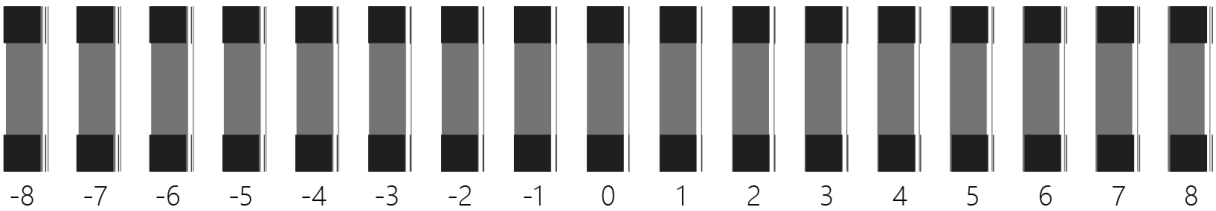

Adjust the parameters according to the alignment, and then save the modifications.

4.7 Step calibration

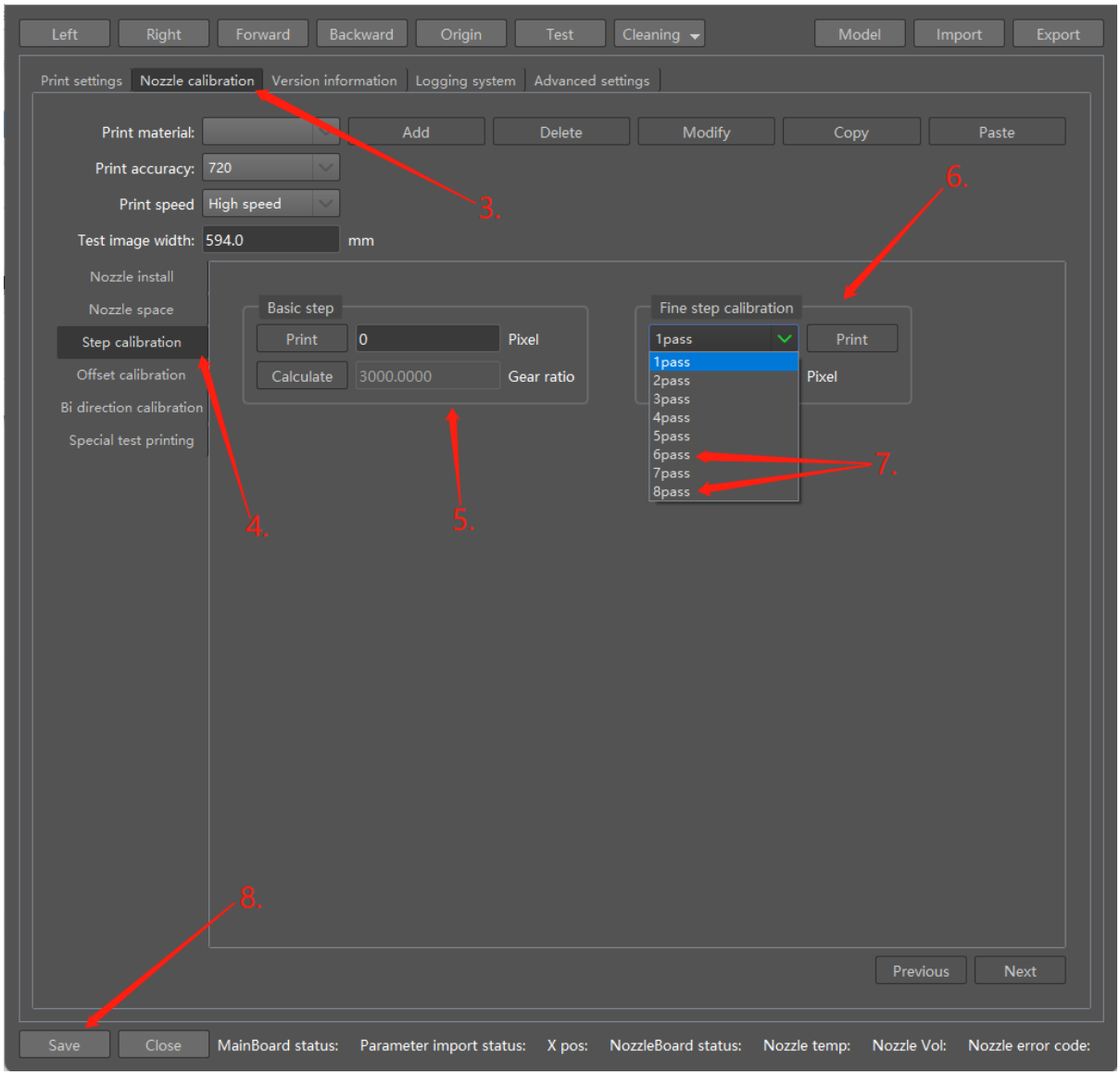

Enter the printer setup interface and print step calibration test, first to make the basic step calibration, adjust the parameters according to the alignment, and then save the modifications.

After the basic calibration, we can keep on with fine step calibration, It is the same processing as basic calibration in 6pass and 8pass mode.

V. CALCA DTF Fairy Rip Software Operation

Please refer to "**CALCA DTF Fairy Rip Software Operation Manual**", Or look at the setup video.

DTF FAIRY RIP SOFTWARE SETUP VIDEO

Scan this QR Code

for a video walkthrough of the CALCA Ultra Pro 24in Printer Software setup and operation video!

Or go directly to this link: https://www.youtube.com/watch?v=iCIOleRQfHY

VI. Printheads Calibration Guide

6.1 Calibration steps

6.1.1 Calibration sequence

Nozzle install -> Nozzle space -> Step calibration -> Offset calibration -> Bi direction calibration.

6.1.2 Physical calibration

1. **Print head test:** Check the state of the nozzle, check whether there is broken line, then clean the nozzle to reach the state of continuous output.
2. **Vertical alignment:** Test whether the nozzle row is perpendicular to the printing direction and parallel to the forward direction of the media.

6.1.3 Software calibration

1. **Nozzle space calibration:** Align the multiple printheads.
2. **Step calibration:** Confirm the accuracy of forward movement distance of the media.
3. **Offset calibration:**
   1) **Offset on the same color:** Calibrate the distance of two rows of printing directions of each color.
   2) **Basic offset:** Take K as the base alignment to calibrate all other colors.
   3) **W/CMYK calibration:** Calibrate the vertical and horizontal deviation of the W and CMYK.
4. **Bi direction calibration:** Calibrate the offset of the two-way printing point.

6.2 Calibration interface

6.2.1 Main interface

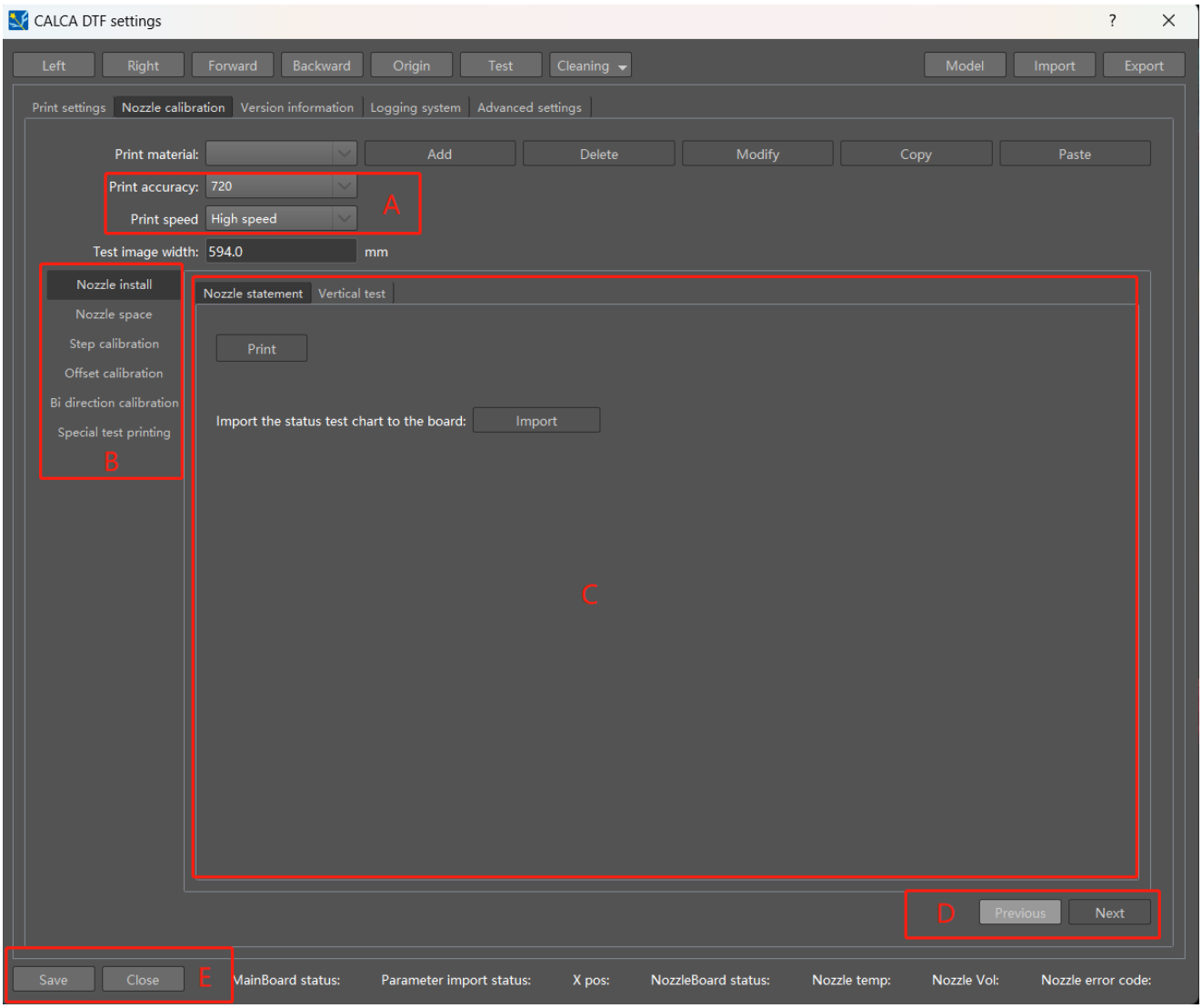

The calibration interface is comprised of the following areas:

A : Calibration of the general parameter selection

1) **X Direction resolution**: Select the print calibration parameters with different printing resolution.
2) **Print speed:** Select the print calibration parameter at different printing speeds.

B : Test printing selection

1) **Physical calibration**: Nozzle check, vertical calibration.
2) **Nozzle overlapping**: Including nozzle group overlapping.

3) **Step calibration:** Contains step calibration test printing and value settings
4) **Offset calibration:** Including the same color calibration, basic offset, W with CMYK calibration test printing and value settings.
5) **Bi direction calibration:** Including Bi direction test printing and value settings
6) **Special test printing:** Including some specific tests.

C : Calibration areas

Operational areas.

D : Calibration guiding

Simplified calibration and process transfer.

E : Save

Each calibration parameter is modified until it is saved.

6.3 Calibration instruction

6.3.1 Print head installation

6.3.1.1 Nozzle status

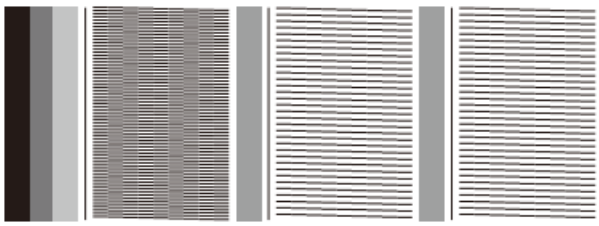

Figure 3.1

Print the test to check the status of the nozzle and see if there is a broken line. If any, clean the nozzle again until the nozzle status is restored or less breakage.

6.3.1.2 Vertical calibration

Vertical test printing shown as below

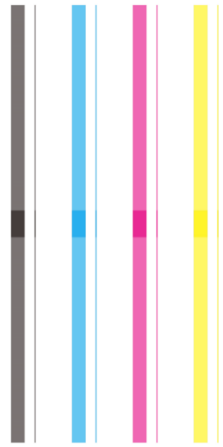	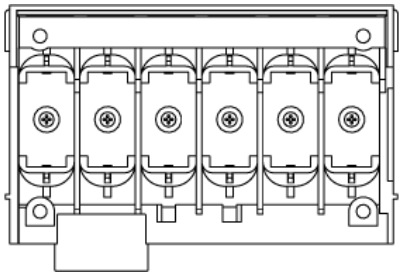	Normal. No adjustment
	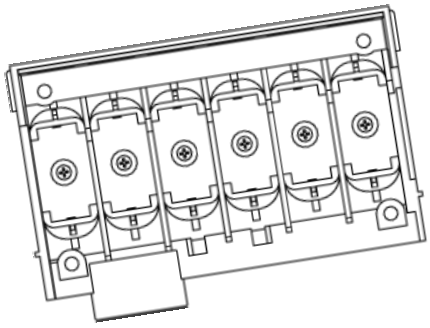	Nozzle deflected counterclockwise Need clockwise rotation correction
	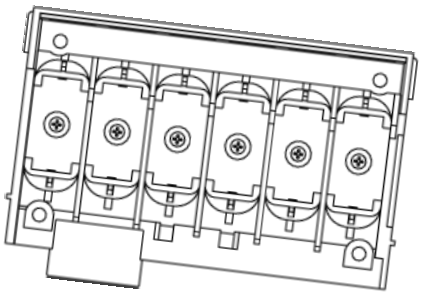	Nozzle deflected clockwise. Need counterclockwise rotation correction

Nozzle layout (top view):

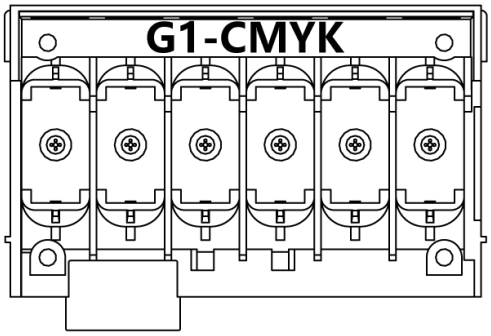

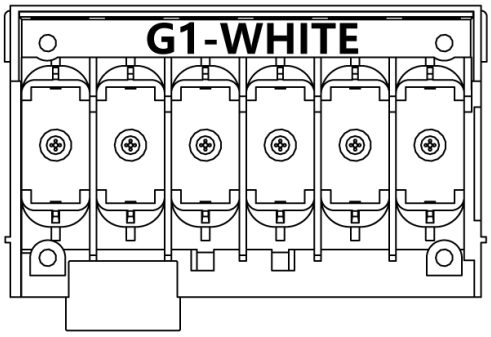

Test printing layout:

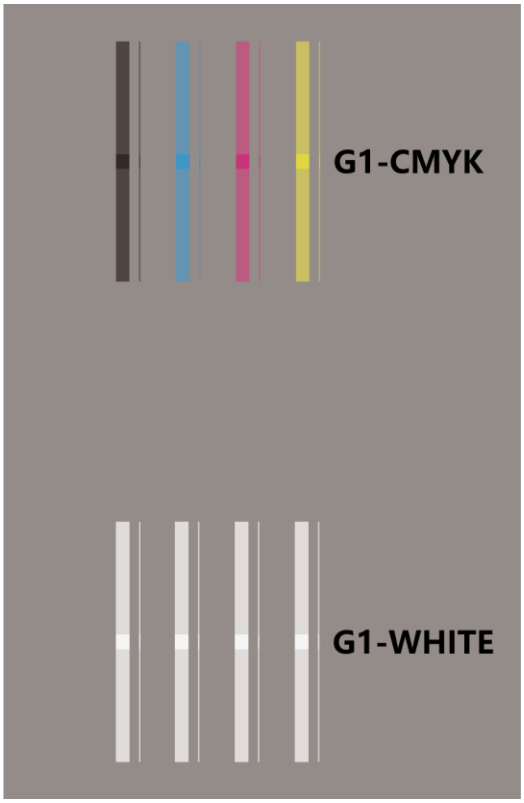

Nozzle adjustment method:

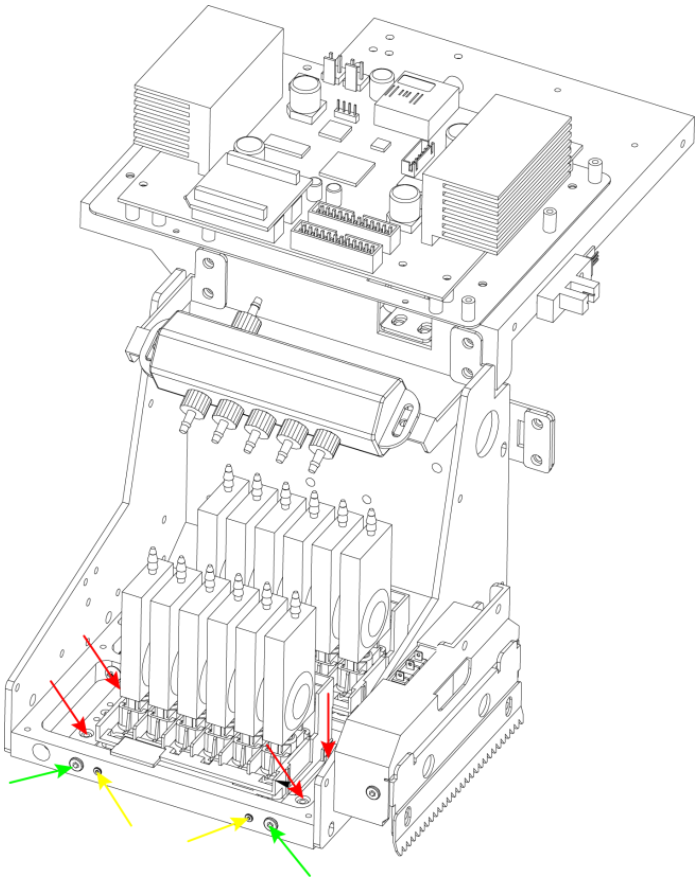

A. The red arrow points to the fixing screws of the print head adjustment frame, and 4 screws need to be loosened when adjusting the print head.

B. The green arrow points to the auxiliary positioning screw of the print head adjustment frame, loosen the screw during adjustment, and let the screw touch the adjustment frame after adjustment.

C. The yellow arrow points to the adjustment screw of the print head adjustment frame.

a) When the screw on the left is turned clockwise or the screw on the right is turned counterclockwise, the nozzle will rotate counterclockwise.

b) When the screw on the left is turned counterclockwise or the screw on the right is turned clockwise, the nozzle will rotate clockwise.

D. When it is necessary to move the front and rear positions of the nozzle to adjust the overlapping space (6.1.3.3) , the left and right adjustment screws are adjusted

at the same angle in the same direction (pull clockwise, push counterclockwise).

6.3.2 Nozzle stitching

Nozzle horizontal group space calibration

Shown in this interface as below:

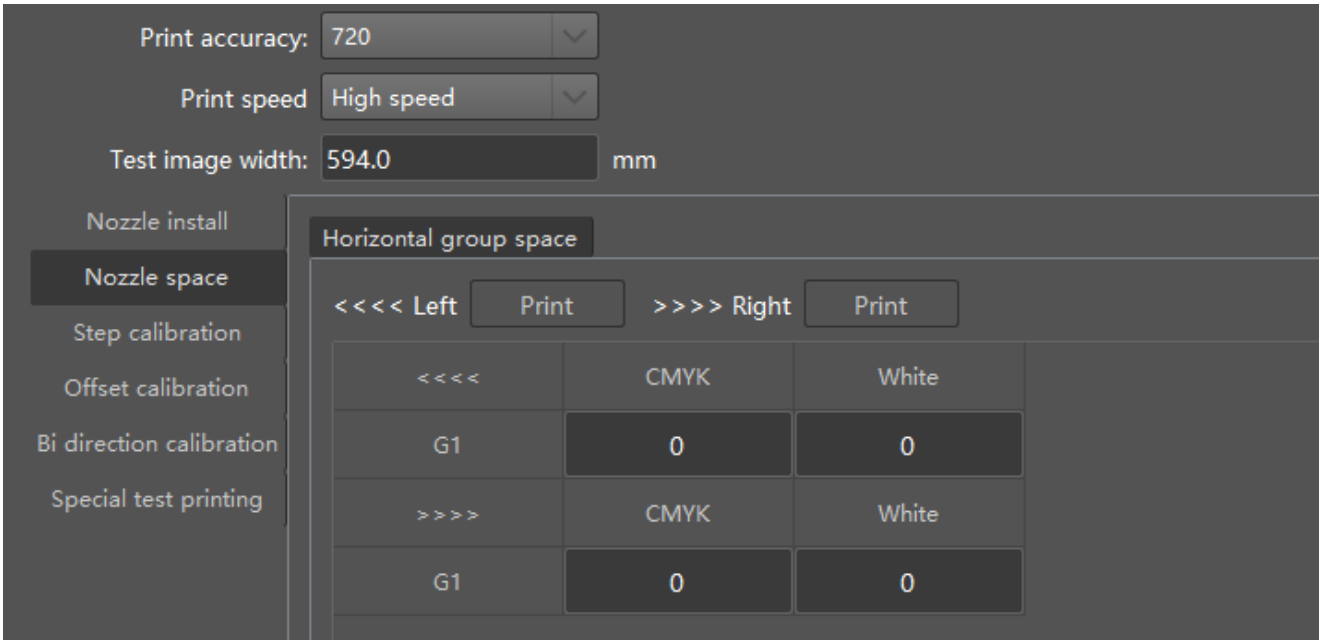

The test print shown as below:

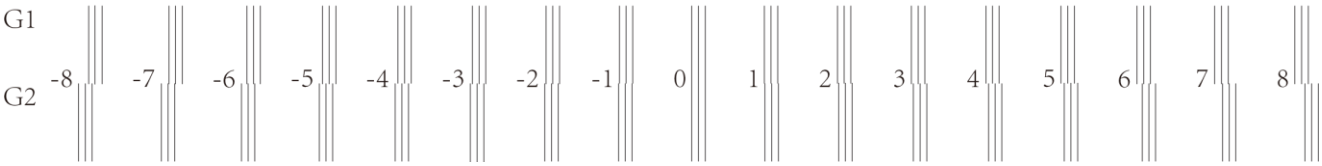

Calibration requirements:

1. Calibrate to the left and to the right respectively, with the same method;
2. CMYK nozzle and the W nozzle should be calibrated separately, according to the process of CMYK calibration;
3. On the test printing, the line segment of G1 coincides with G2 at the calibration value of 0.

Calibration steps:

Print the test and find the calibration value of the overlapping. If the calibration value

is 3, fill in 3.

6.3.3 Step calibration

Step calibration interface

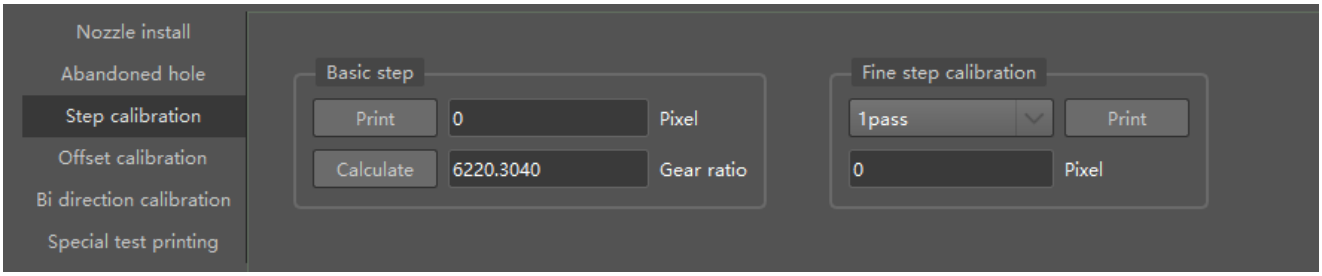

6.3.3.1 Basic step calibration

Click the print button and print the calibration diagram as shown below:

Calibration requirements:

Print calibration test, value 0 means no deviation in 3 horizontal line segments.

Calibration steps:

Print the calibration test, if the calibration value is 3, fill in 3 and then calculate and save.

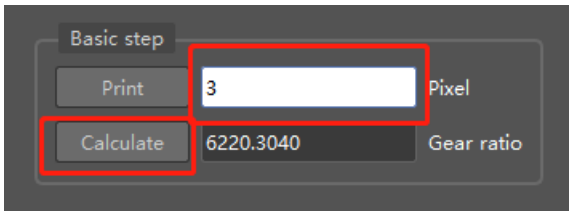

6.3.3.2 Fine step calibration

Instructions :

Only after the basic step calibration is completed, the multi-pass printing has a fixed step error probably, then the step fine calibration is adjusted. If there is a deviation within a small range, take the average value for adjustment.

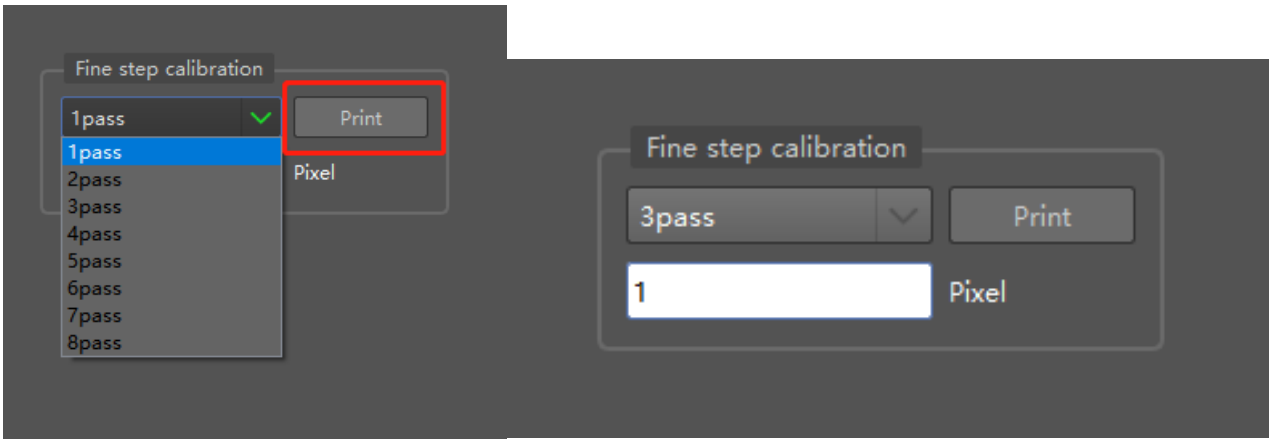

6.3.4 Offset calibration

6.3.4.1 Offset on the same color

Calibration interface:

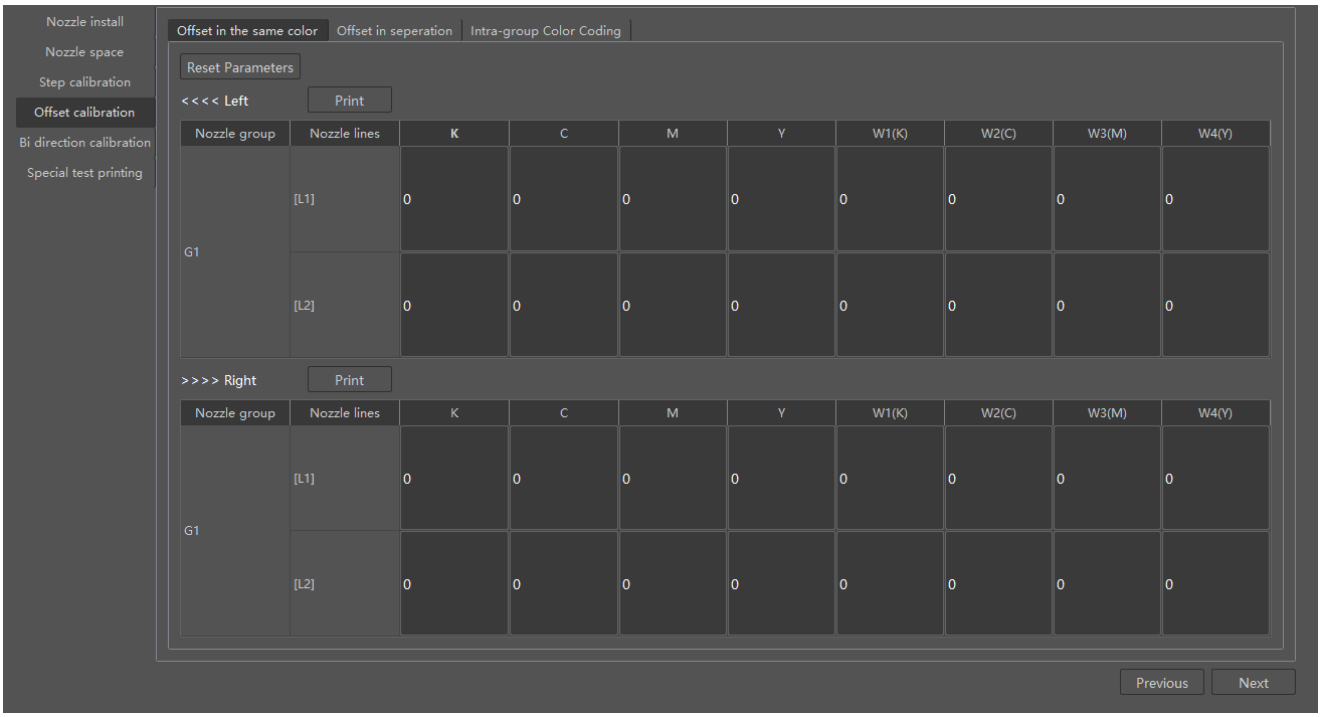

Calibrate to the left and right respectively with the same processing.

Calibration requirements:

On the calibration printing, the value 0 shows a full overlap between the line and color blocks.

Calibration steps:

Print the calibration test and find the calibration value of the line and color block.

If the calibration value of K is 3, fill in 3.

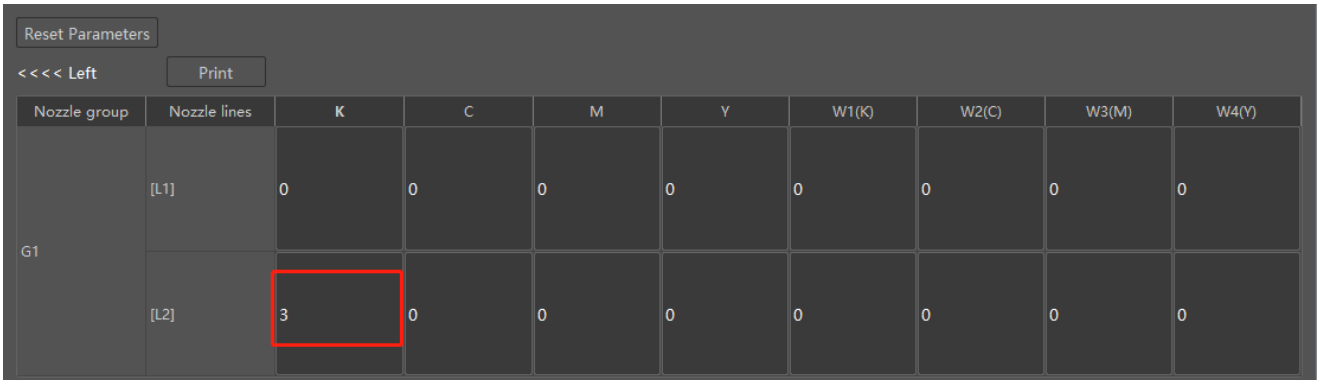

6.3.4.2 Basic offset

Basic offset interface:

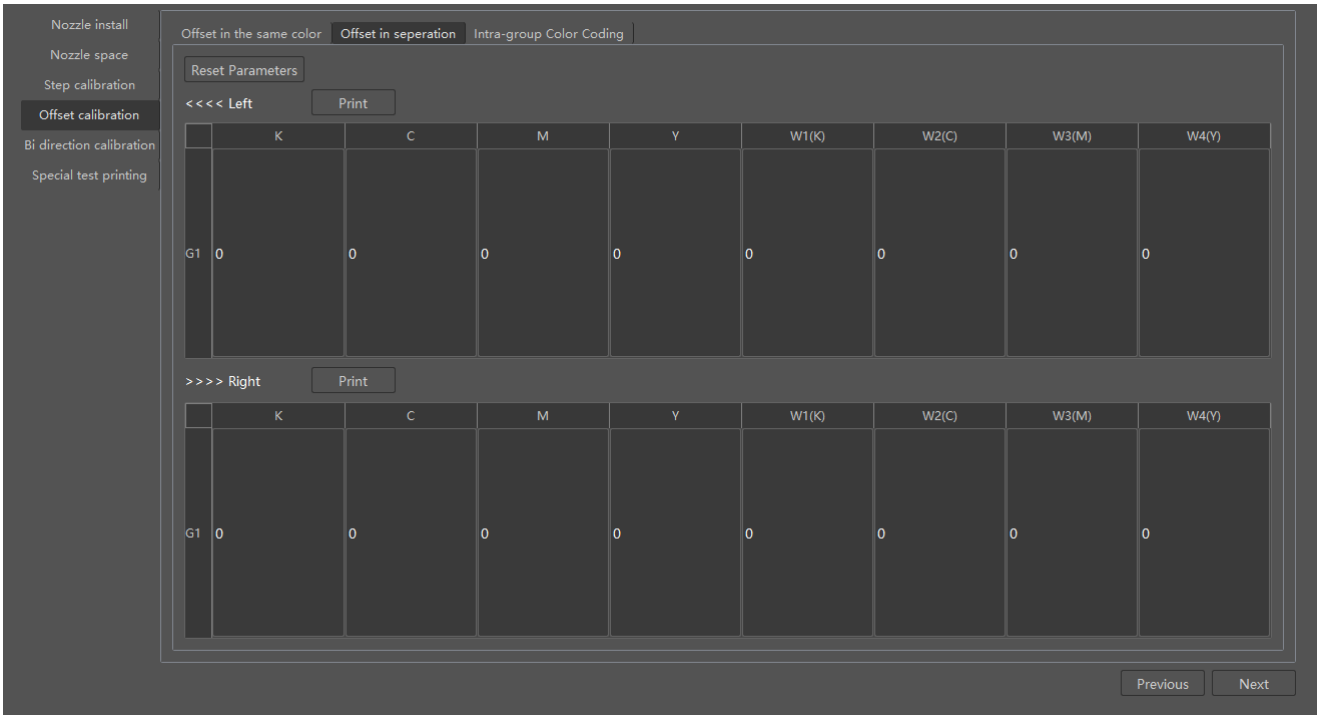

Calibrate to the left and right respectively with the same processing.

Calibration requirements:

On the calibration printing, the value 0 shows a full overlap between the line and color blocks.

Calibration steps:

Print the calibration test and find the value of the line and the color block.

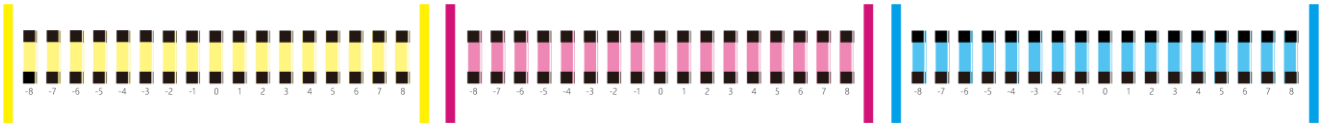

If the calibration value of C is 3, fill in 3.

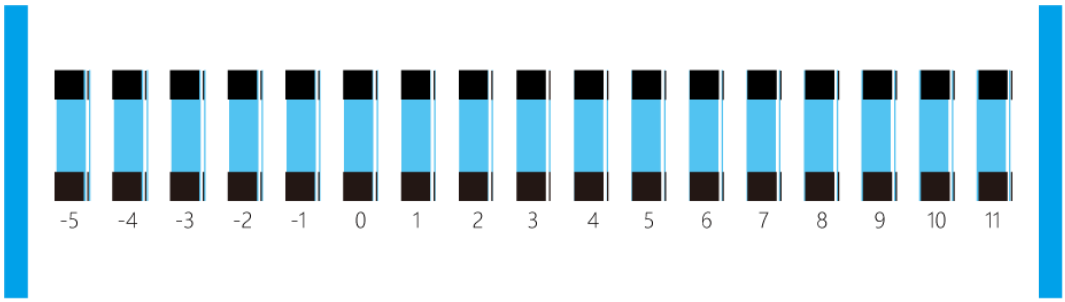

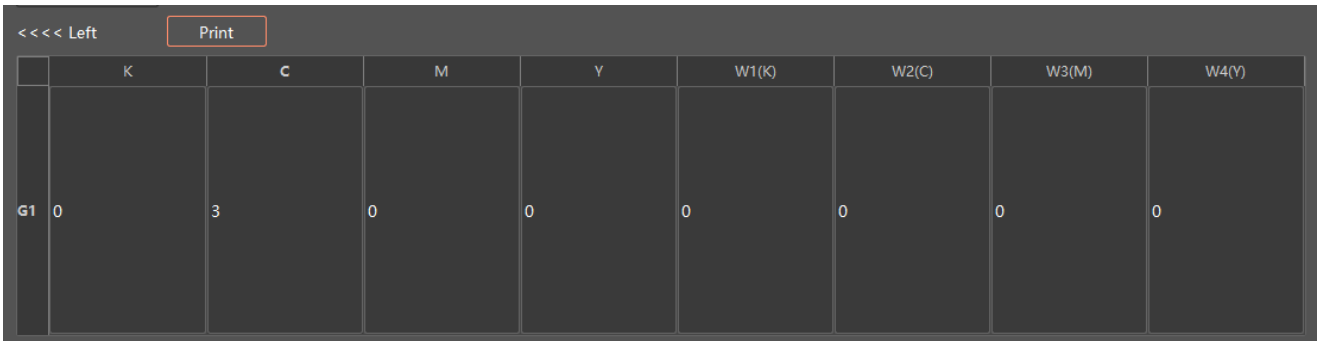

	K	C	M	Y	W1(K)	W2(C)	W3(M)	W4(Y)
G1	0	3	0	0	0	0	0	0

6.3.4.3 W/CMYK offset

Calibration interface:

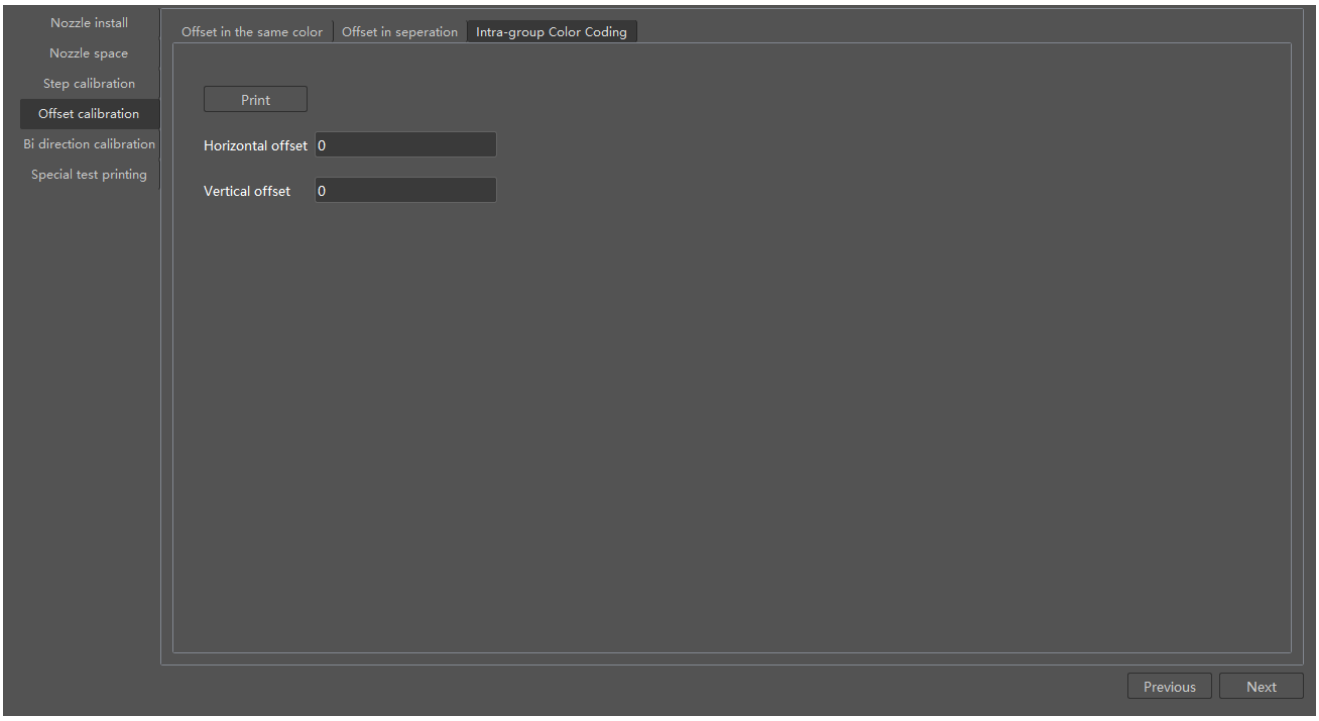

Calibration requirements:

On the calibration printing, the value 0 shows a perfect position.

Calibration steps:

Print the calibration test:

Find the value in the row of HORZ on the figure,if the value is 3, fill in 3 in the horizontal setting box.

Find the value in the row of VERT on the figure,If the value is-5, fill in -5 in the vertical setting box.

And then save and print for confirmation.

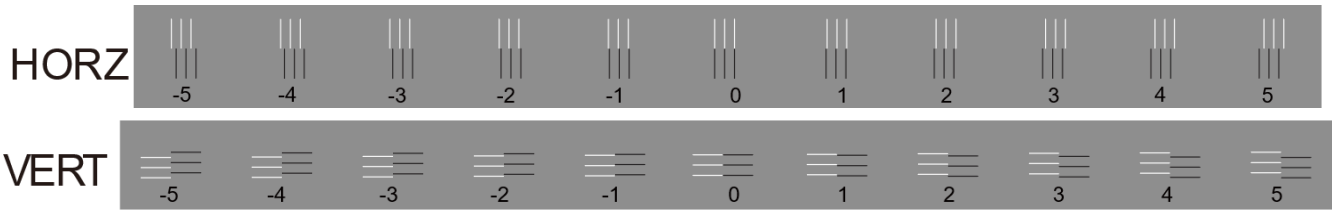

6.3.5 Bi direction calibration

Calibration interface:

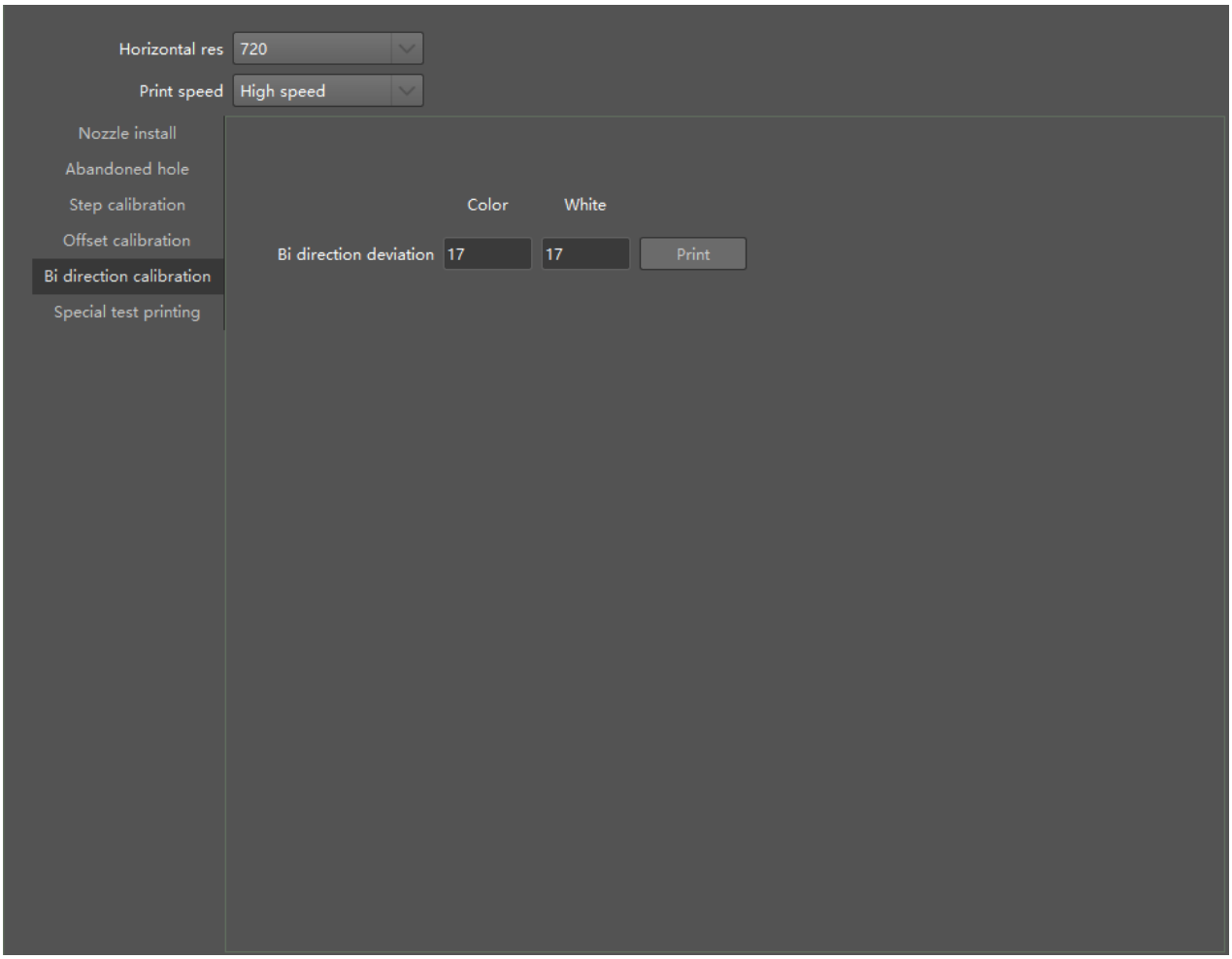

Calibration test printing:

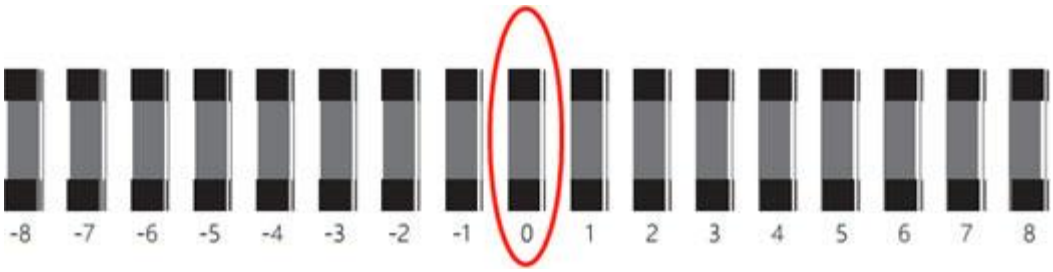

Calibration requirements:

On the calibration printing, the value 0 shows a perfect position.

Calibration steps:

Print the calibration test and calibrate the color and white respectively. If the color bidirectional value is 2, fill in 2, and it is the same way to calibrate the white.

VII. Troubleshooting

This chapter provides information on possible causes of machine errors/damage and recovery actions.

7.1 Error information & solution

Type	Code	Error Information	Error Analyze	Solution
Serious	1001	Ink channel not support		
Serious	1002	Grayscale level not support		
Serious	1003	X resolution mismatched		
Serious	1004	Y resolution mismatched		
Serious	1005	The print width exceeds the maximum.		
Serious	1011	Mainboard not connected.	1. The device is not powered on. 2. Errors in mainboard's running. 3. The printing software is disconnected from the device. 4. The computer IP is not set correctly. 5. The computer network drives wrong.	1. Check the status of the mainboard. 2. Check the connection between the computer and the device. 3. Confirm the computer IP. 4. Check the network driver.
Serious	1012	The mainboard register failed to read and write.	The mainboard is disconnected from the printing software.	Check the mainboard status.
Serious	1013	Timeout when waiting for the motor to stop.	1. Motor stop signal is not received in the defined time. 2. Printing software is disconnected from the mainboard.	1. Restart the device. 2. Check the mainboard status.
Serious	1014	The mainboard failed to transmit the data.	The mainboard is disconnected.	Check the mainboard status.
Serious	1015	Mainboard reset failed.	1. The device is powered off. 2. The printing software is disconnected from the device.	1. Check the status of the mainboard. 2. Check the connection between the computer and device.
Serious	1016	The execution of mainboard instruction failed.	1. Mainboard is powered off. 2. The printing software is disconnected from the device.	1. Check the status of the mainboard. 2. Check the connection between the computer and the device.
Serious	1017	The carriage acceleration distance is not enough.	1. The distance between the origin position and the start printing position is less than the carriage acceleration.	1. Add the base point in the print settings. 2. Increase the carriage acceleration

			2. The actual acceleration distance of the carriage is less than the set one.	distance.
Serious	1018	1.Check whether the printing width exceed the setting. 2. Check whether the maximum distance of the carriage matches the device in the motor setting.	1. The print picture is too wide and the print will exceed the set range of motion. 2. The maximum range of motion of the car is set too small, and the printing distance is not enough.	Match the range of motion setting to the actual maximum motion limit.
Serious	1041	The print head board is not connected.	1. The device is not powered on. 2. The print head board is abnormal. 3. The printing software is disconnected. 4. The computer IP is not set correctly. 5. The computer network is abnormal.	1. Check the status of the print head board. 2. Check the connection between the computer and the device. 3. Confirm the computer IP. 4. Check computer network.
Serious	1042	The print head board communication failed.	1. The print head board is powered off. 2. The print head board is abnormal.	Check the status of the print head board.
Serious	1043	The print head's power on is failed.	1. The print head board is abnormal. 2. Error in network connection.	Check the status of the print head board.
Serious	1044	The print head's power off is failed.	1. The print head board is abnormal. 2. Error in network connection.	Check the status of the print head board.
Serious	1061	Media sensor not triggered	1. Media not reach on the platform. 2. Error in media sensor.	1. Reset the media loading. 2. Check the media sensor.
Serious	1062	Manually cancel the printing		
Serious	1063	Carriage anti-collision sensor triggered	1. Uneven media scraping triggered the anti-collision sensor. 2. Carriage movement exceeds the limit to make a collision 3. Anti-collision false triggering.	1. Return to the origin after power cut off. 2. Check carriage motion imitation. 3. Check the anti-collision sensor.
Serious	4001	The print head type for the configuration parameter is not supported.		
Serious	4002	Customized print head type for the configuration parameter is not supported		
Serious	4003	The physical accuracy of the customized print head is not recognized, not support mixing.		
Serious	4004	The customized virtual print head layout is not recognized, not support mixting.		

Serious	4005	The nozzle overlapping configuration parameter is incorrect.		

7.2 Exploded View Board

7.2.1 CALCA mainboard

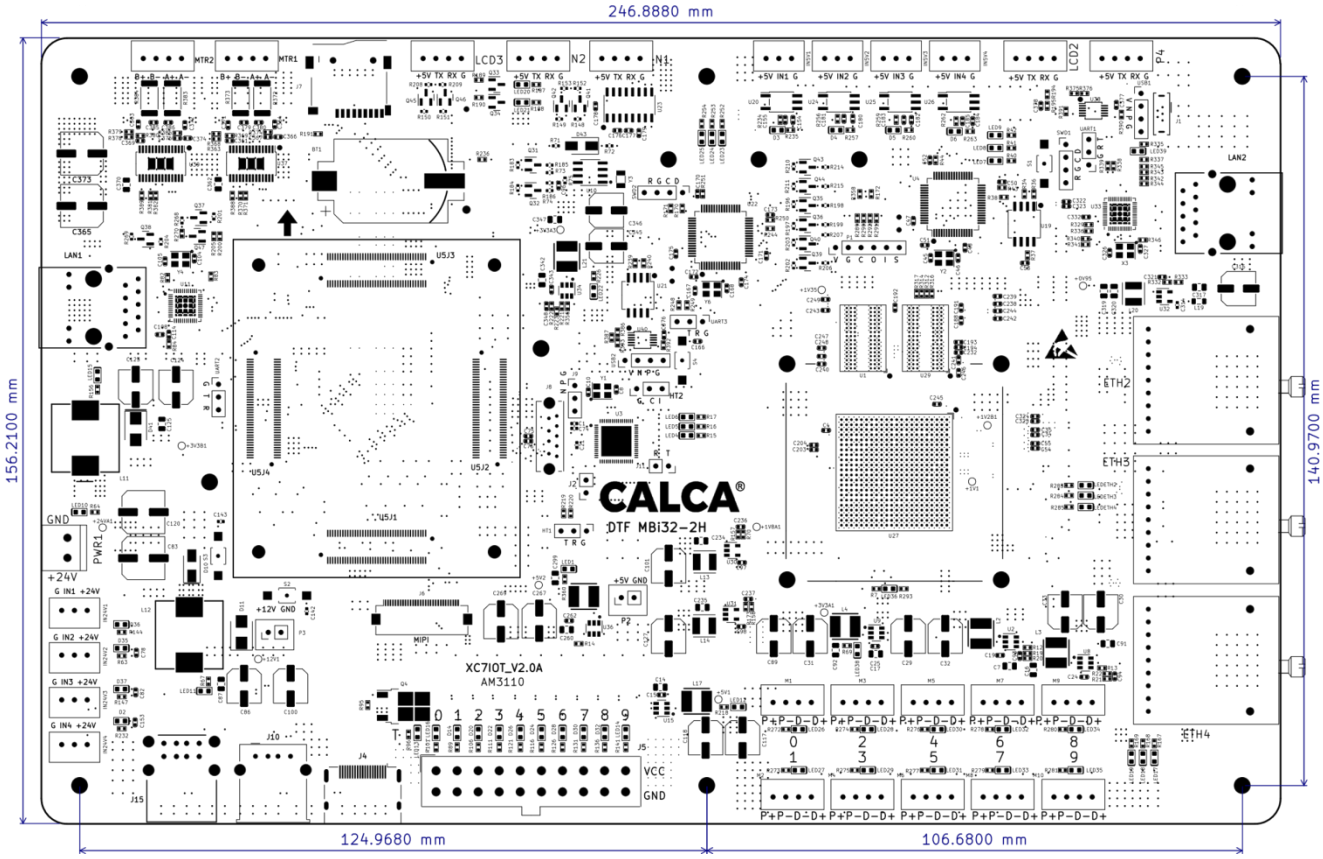

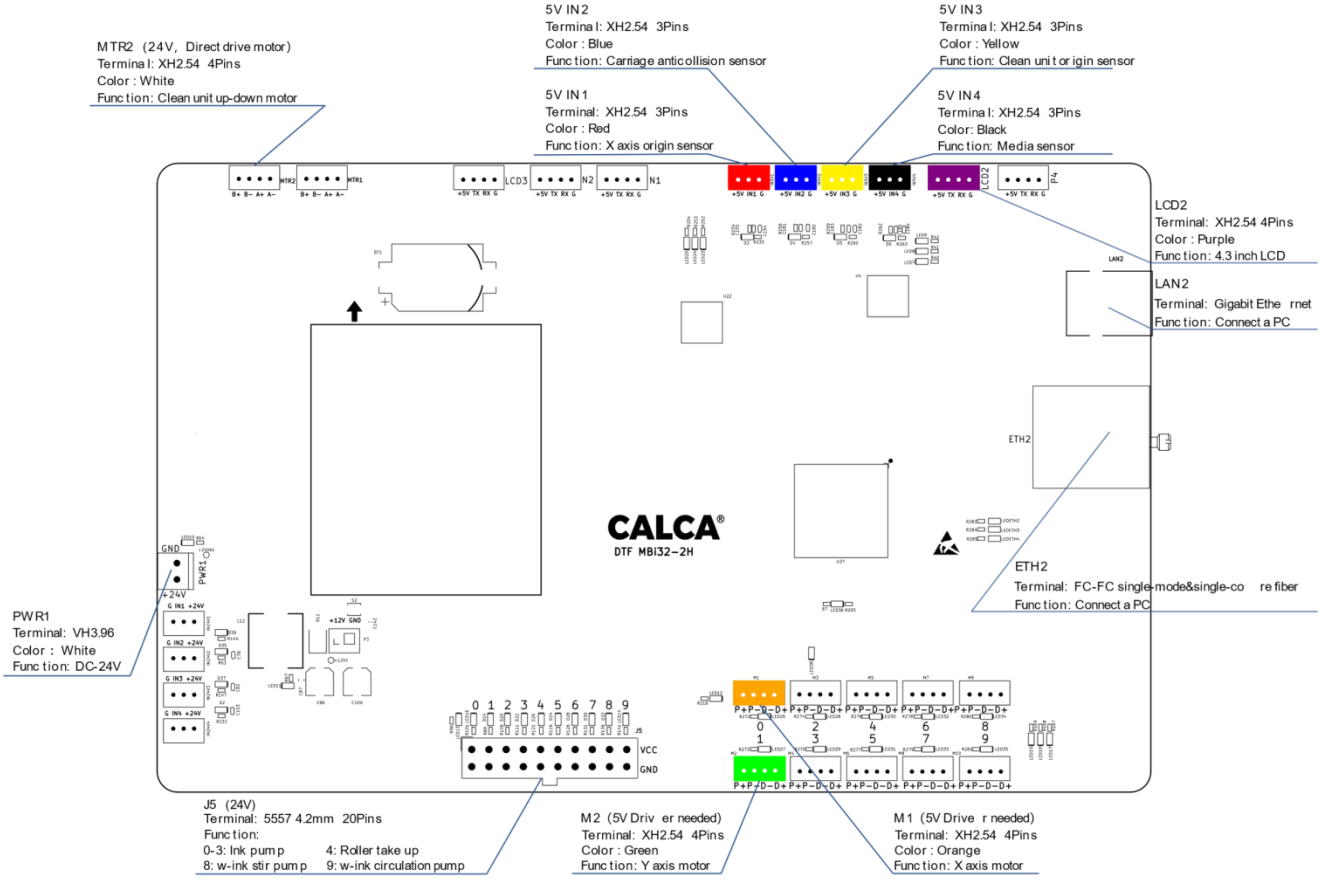
MTR2 (24V, Direct drive motor)
Terminal: XH2.54 4Pins
Color : White
Function: Clean unit up-down motor
5V IN2
Terminal: XH2.54 3Pins
Color : Blue
Function: Carriage anticollision sensor
5V IN1
Terminal: XH2.54 3Pins
Color : Red
Function: X axis origin sensor
5V IN3
Terminal: XH2.54 3Pins
Color : Yellow
Function: Clean unit origin sensor
5V IN4
Terminal: XH2.54 3Pins
Color: Black
Function: Media sensor
LCD2
Terminal: XH2.54 4Pins
Color : Purple
Function: 4.3 inch LCD
LAN2
Terminal: Gigabit Ethernet
Function: Connect a PC
ETH2
Terminal: FC-FC single-mode&single-core fiber
Function: Connect a PC
PWR1
Terminal: VH3.96
Color : White
Function: DC-24V
J5 (24V)
Terminal: 5557 4.2mm 20Pins
Function:
0-3: Ink pump 4: Roller take up
8: w-ink stir pump 9: w-ink circulation pump
M2 (5V Driver needed)
Terminal: XH2.54 4Pins
Color : Green
Function: Y axis motor
M1 (5V Driver needed)
Terminal: XH2.54 4Pins
Color : Orange
Function: X axis motor
CALCA®
DTF MBi32-2H

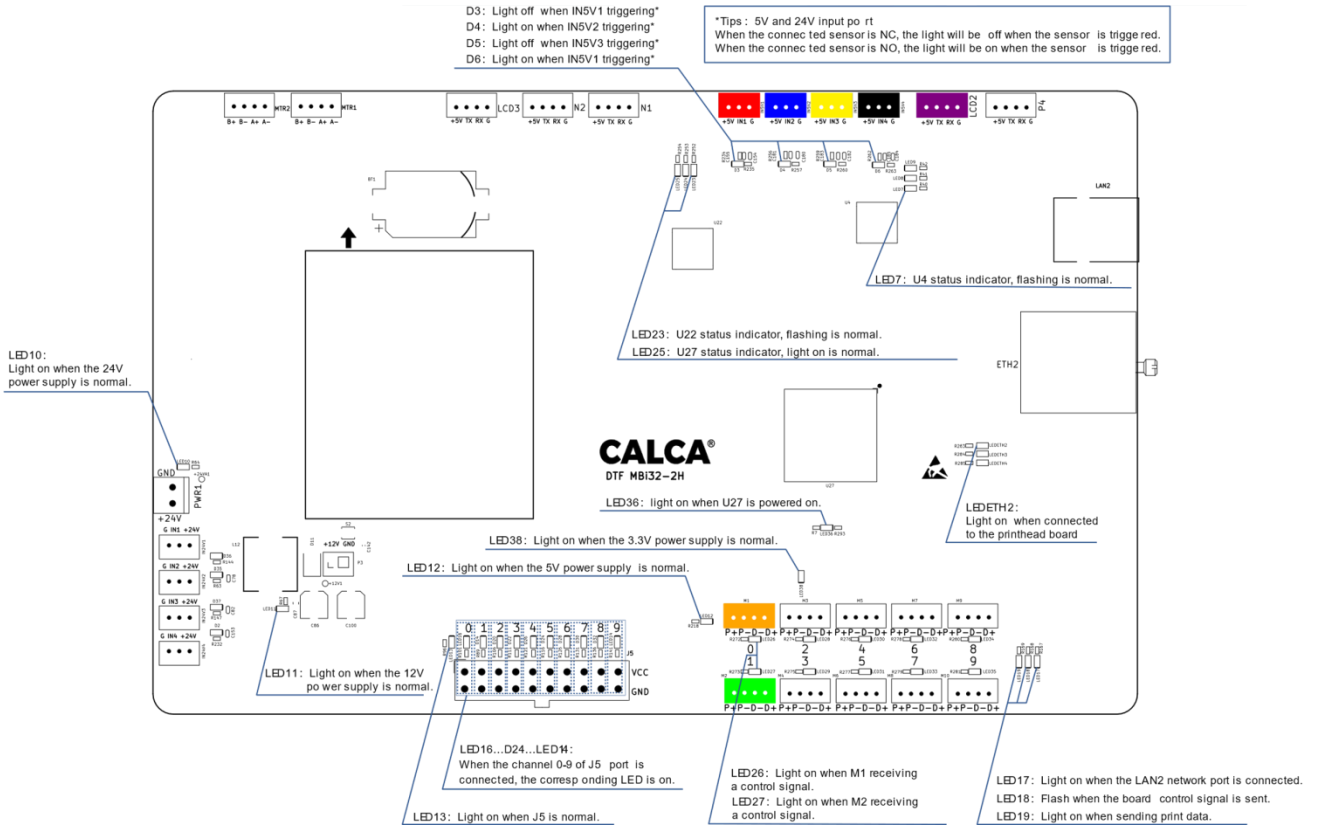
D3: Light off when IN5V1 triggering*
D4: Light on when IN5V2 triggering*
D5: Light off when IN5V3 triggering*
D6: Light on when IN5V1 triggering*
*Tips: 5V and 24V input port
When the connected sensor is NC, the light will be off when the sensor is triggered.
When the connected sensor is NO, the light will be on when the sensor is triggered.
LED7: U4 status indicator, flashing is normal.
LED23: U22 status indicator, flashing is normal.
LED25: U27 status indicator, light on is normal.
LED10:
Light on when the 24V power supply is normal.
LED36: light on when U27 is powered on.
LEDETH2:
Light on when connected to the printhead board
LED38: Light on when the 3.3V power supply is normal.
LED12: Light on when the 5V power supply is normal.
LED11: Light on when the 12V power supply is normal.
LED16...D24...LED14:
When the channel 0-9 of J5 port is connected, the corresponding LED is on.
LED13: Light on when J5 is normal.
LED26: Light on when M1 receiving a control signal.
LED27: Light on when M2 receiving a control signal.
LED17: Light on when the LAN2 network port is connected.
LED18: Flash when the board control signal is sent.
LED19: Light on when sending print data.
CALCA®
DTF MBi32-2H

7.2.2 CALCA head board

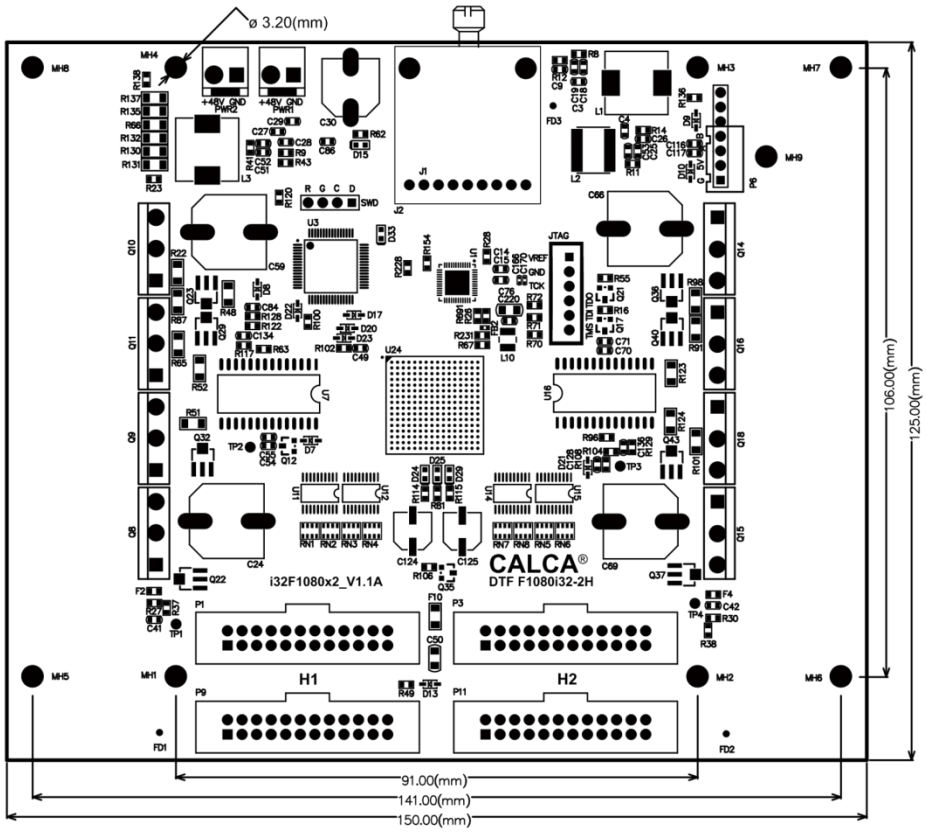

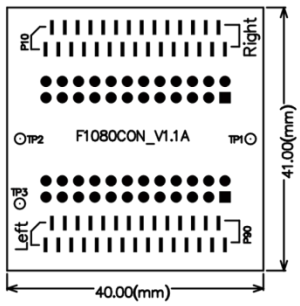

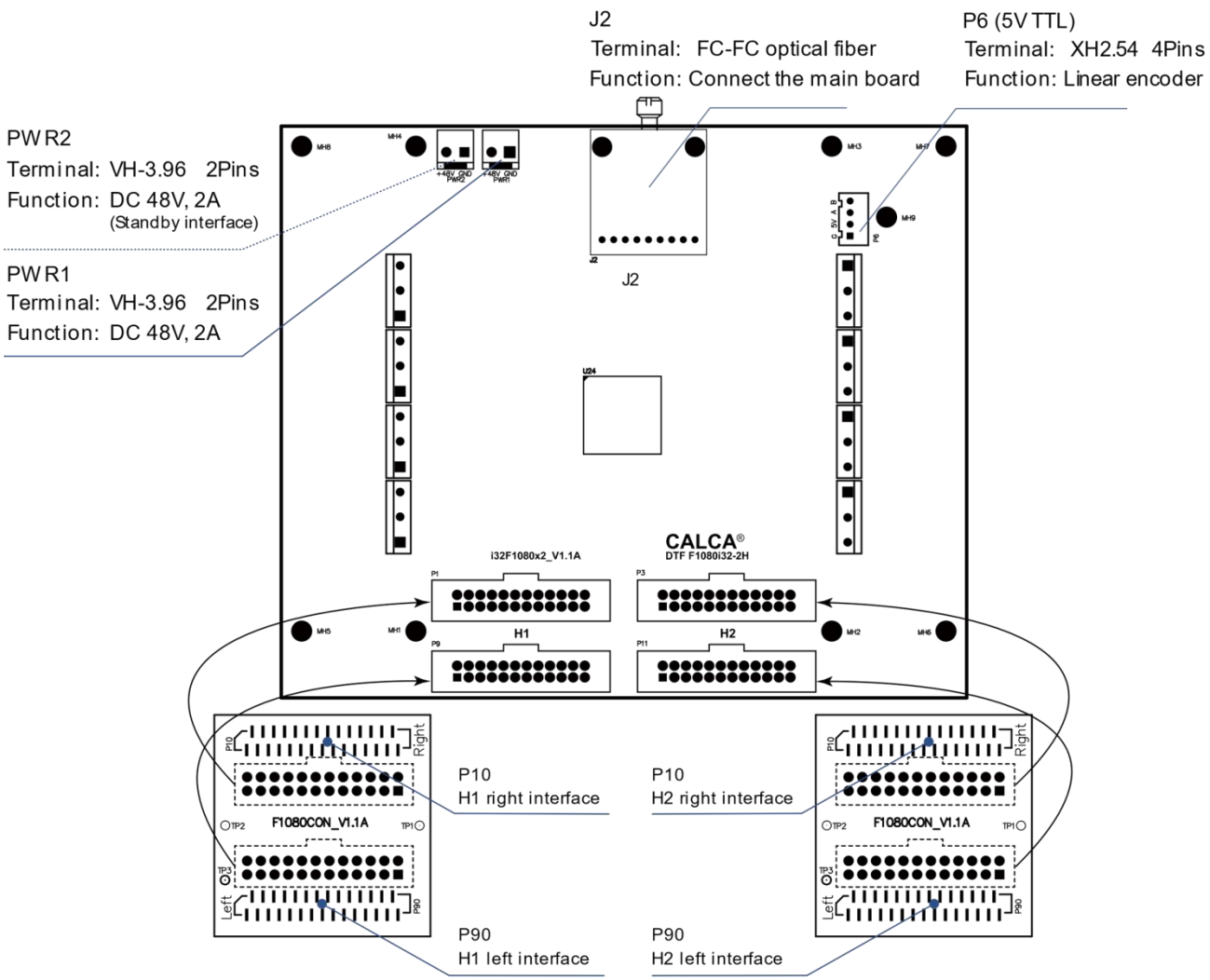
J2
Terminal: FC-FC optical fiber
Function: Connect the main board
P6 (5V TTL)
Terminal: XH2.54 4Pins
Function: Linear encoder
PWR2
Terminal: VH-3.96 2Pins
Function: DC 48V, 2A
(Standby interface)
PWR1
Terminal: VH-3.96 2Pins
Function: DC 48V, 2A
J2
CALCA®
DTF F1080i32-2H
i32F1080x2_V1.1A
H1
H2
P10
H1 right interface
P10
H2 right interface
F1080CON_V1.1A
Right
Left
P90
H1 left interface
P90
H2 left interface

VIII. Maintenance

8.1 Remarks

1. Power supply

Confirm the voltage stability of AC110V, 60Hz, it is recommended to use the voltage regulator, the ground wire must be installed.

3. Environment

Please keep the machine working environment meeting the requirements of equipment operation (temperature 68-95F, humidity 45-65%), there must be no strong magnetic field or the equipment causing a lot of dust, try to avoid strong light exposure affecting the sensitivity of the sensor.

3. Ink

Add the ink when the buzzer rings, check the remaining inks amount before running every day, and avoid adding the ink during printing.

The ink should be kept in the adequate environment, avoid strong light and ensure good ventilation.

Use the correct water-based cleaning solution.

Pour waste ink daily, empty the waste ink bottle in a long-term transportation. be careful to keep vertical and not shake when removing the waste ink bottle from the printer, please dispose it lawfully.

8.2 Maintenance overview

In terms of running, the surface of the platform must be cleared to avoid nozzle scratching. The dent on the surface of the nozzle is regarded as man-made damage, and the scratch is judged as man-made damage.

1. When cleaning the printer, please close the main power and unplug the power cable.

2. The machine should keep clean at any time during daily use to avoid dust deposition.
3. Do not wipe the surface of the nozzle without training and authorization, which may cause damage to the nozzle.
4. Do not touch the print head or make the print head touch any other substance. Clean the dust around the print head, and gently wipe with a special cloth and cleaning liquid.

8.3 Routine checking

1. Before daily operation, check the nozzle status to avoid quality problems such as broken lines, oblique spray and ink splashing. If the above problems occur, the nozzle should be cleaned in time to ensure the printing quality and avoid the physical damage caused by the ink outage for a long time.
2. Check the rubber ring on ink stack cap and the status of wiper every week, if irreversible deformation occurs, it must be replaced.
3. Clean the guide rail once a quarter (Do not use water to clean, wipe the dust with non-woven cloth) with special lubricating oil.
4. The machine will rest for 30 minutes for every 8 hours.
5. If the machine needs to stop working for more than 1 week (power off), the ink circulation needs to take measures to deal with blockage, please contact the engineer. Avoid Long-term absence of running, it poses the risk of blockage and cause the no recovery after the ink loading.

8.4 Day/weekly/monthly maintenance

8.4.1 Daily maintenance

	> **Shake leftover white ink** > Turn **printer on** > Increase **White Ink Circulation** motor

DAILY (AM)	> Execute "**Fill Ink**" > Execute "**Cleaning**" > Pull **media to the front** > Perform "**Nozzle Check**" **Add the ink** when the buzzer ring, check the remaining ink amount before running every day, and avoid adding the ink during printing.
DAILY (PM)	> **Retract media** > Clean the **vacuum bottom platen** > Move **printhead carriage to left side** > **Clean / wipe capping station rubber gaskets & wiper blades** w/ cleaning swab > **Clean around head** with cleaning solution > **Pour cleaning solution** into **capping station rubber gaskets** > **Engage printhead** back to capping station > **Turn printer off** > **Cover printer** **Pour waste ink daily:** Empty the waste ink bottle in a long-term transportation, be careful to keep vertical and not shake when removing the waste ink bottle from the printer, please dispose it lawfully.

8.4.2 Weekly maintenance

> **Check Ink Bottle** Check to see if there is any ink that needs refilling. Check to see if stirring device on the white ink bottle is functioning.

> **Check Waste Bottle** – Empty the bottle

> **Clean Encoder Strip**

Use a microfiber cloth / lint-free wipe & 90% or higher isopropyl alcohol, and wipe the strip gently to remove any dust, debris, ink build-up.

> **Clean Media Rollers**

Use a microfiber cloth / lint-free wipe to wipe any dust/debris from the media / film. DO NOT USE ALCOHOL. You may use cleaning solution, but make sure that the rollers are fully dried before use.

> **Clean Tension Sensor**

Use a microfiber cloth / lint-free wipe & 90% or higher isopropyl alcohol, and wipe the strip gently to remove any dust/debris.

8.4.3 Monthly maintenance

> Shake the Color Ink bottles for 30 seconds.

8.4.4 As needed

> **Media replacement:** Whenever you replace your film with a new film, take time to clean the media rollers. Disengage the roller and thoroughly clean the rubber. roller with a microfiber cloth or lint-free wipe to wipe any dust/debris from the media/film.

> **Keep all exterior surfaces clean:** Use a microfiber cloth to clean the outside surface. DO NOT spray any liquid, as it may damage the board inside.

8.4.5 Long-term storage (1-2 weeks)

> **Clip the ink tubes** from the ink bottle and before the damper

> **Wet Cap**

8.4.6 Long-term storage (2+ weeks)

> **Empty the Ink Bottle**

> **Pour all inks** back into the original ink bottles

> **Pour cleaning solution** into the ink bottles and fill until you see the cleaning

solution in the dampers and through the ink waste bottle.

8.4.7 Routine maintenance form

	Weekly	Monthly	As Needed	Long Term Storage (1-2 weeks)	Long Term Storage (2+ weeks)
Check Waste Bottle					
Check Ink Bottle					
Clean Encoder Strip					
Clean Media Rollers					
Clean Tension Sensor					
Shake Color Ink Bottles					
Media Replacement					
Clean Exterior Surfaces					
Clip Ink Tubes					
Wet Cap					
Empty Ink Tank					
Pour Cleaning Solution					

8.5 Wearing parts maintenance

Daily maintenance on nozzle and ink station

Preliminary preparation

Cleaning liquid (or pure water), non-woven cloth, cotton swab

8.5.1 Nozzle maintenance

1. Unlock the ink station and move the carriage to the left end of the platform, as shown in the figure;

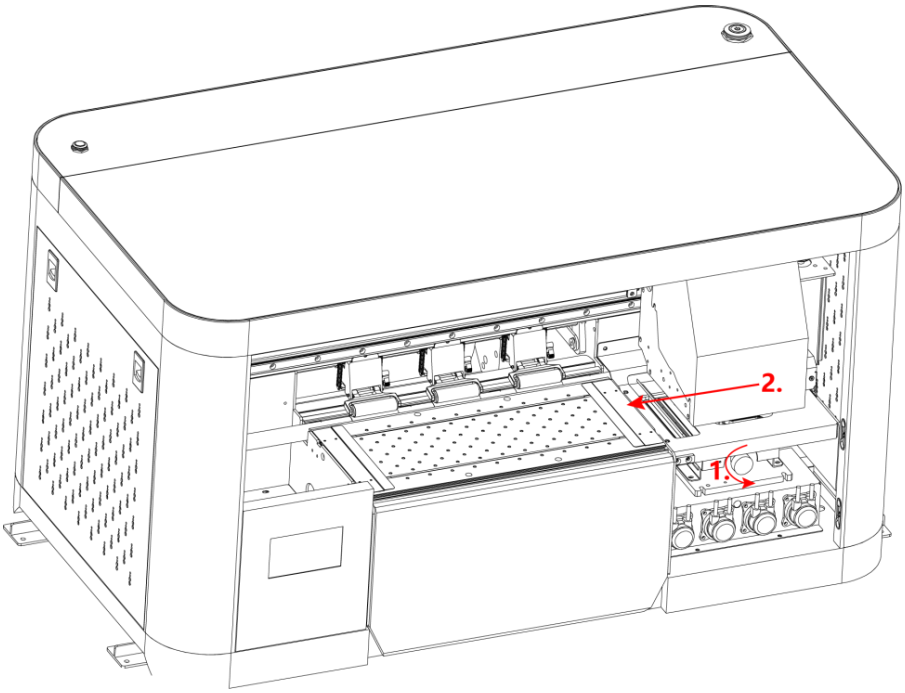

2. Wipe the nozzle side with cotton swab dipped with cleaning liquid or purified

water, and wipe the ink block around the surface of the nozzle. Pay attention to the nozzle chip shown in the picture, it cannot be cleaned with swab.

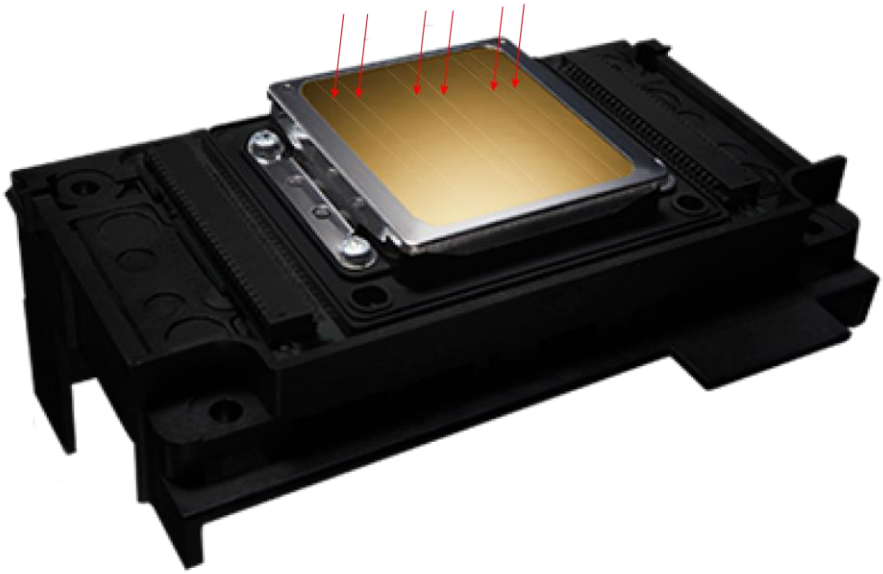

8.5.2 Ink station maintenance

Wipe the ink station cushion with cotton swab dipped with cleaning liquid or purified water.

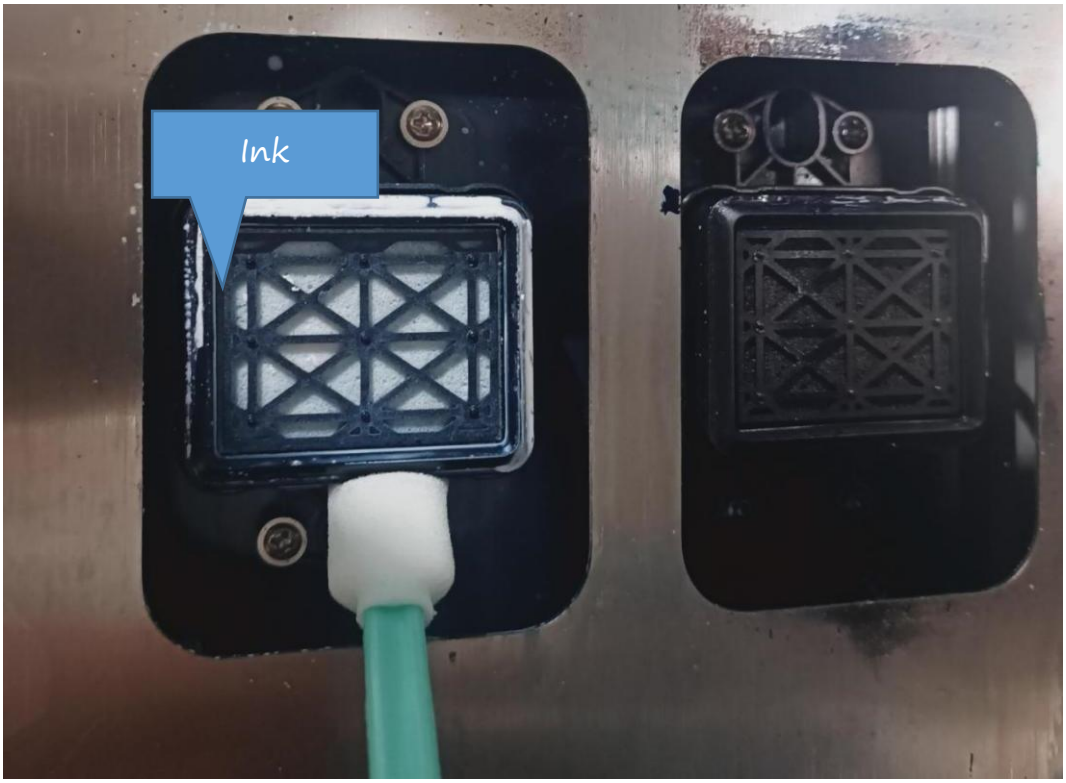

After wiping, use non-woven cloth to clean the excess cleaning fluid and ink, you can

see the restoration shown in following figure:

8.5.3 Wiper maintenance

Clean the wiper with cotton swab dipped with cleaning liquid, and dry it with non-woven cloth.

You can see the restoration shown in following figure:

After maintenance, it is necessary to driver the carriage back to the origin, and make

the nozzle and ink absorption cushion sealed.

IX. Warranty

- Lifetime **Technical Support.**
- Limited to **2-year warranty** on **non-consumable parts.**
- 1 year warranty on non-consumable parts if you don't use CALCA' s ink, film.
- Warranty on parts only for printer(s) using CALCA DTF inks, films, and printer(s) under proper maintenance and usage.

Company or person requesting warranty repair shall contact CALCA for pre-authorization and selection of a qualified repair technician to service the equipment prior to performing service on the equipment. Failure to request pre-authorization for service repair and selection will result in denial of a warranty claim.

CALCA will not be liable for labor or material costs associated with graphic production, graphic application, equipment downtime or any other consequential damages including loss of profits or potential business sales, arising out of a warranty claim. It is the user's responsibility to secure the equipment and surrounding area to prevent damage from damages arising from a warranty claim. CALCA is not responsible for damages from improper care, maintenance or repair of equipment associated with normal operation.

FCC WARNING

This device complies with part 15 of the FCC Rules. Operation is subject to the following two conditions: (1) this device may not cause harmful interference, and (2) this device must accept any interference received, including interference that may cause undesired operation.

Any changes or modifications not expressly approved by the party responsible for compliance could void the user's authority to operate the equipment.

NOTE: This equipment has been tested and found to comply with the limits for a Class B digital device, pursuant to Part 15 of the FCC Rules. These limits are designed to provide reasonable protection against harmful interference in a residential installation. This equipment generates, uses and can radiate radio frequency energy and, if not installed and used in accordance with the instructions, may cause harmful interference to radio communications. However, there is no guarantee that interference will not occur in a particular installation. If this equipment does cause harmful interference to radio or television reception,

which can be determined by turning the equipment off and on, the user is encouraged to try to correct the interference by one or more of the following measures:

-- Reorient or relocate the receiving antenna.

-- Increase the separation between the equipment and receiver.

-- Connect the equipment into an outlet on a circuit different from that to which the receiver is connected.

-- Consult the dealer or an experienced radio/TV technician for help.

To maintain compliance with FCC' s RF Exposure guidelines, This equipment should be installed and operated with minimum 20cm distance between the radiator and your body: Use only the supplied antenna.