LITHIUM RHINO

Technical Support Text "RHINO"
to1-844-910-2689
Phone:813-336-2457M-F9-6EST
Email:info@lithiumrhino.com
WWW.LITHIUMRHINO.COM

7 41718 29132 7

LITHIUM RHINO

MODEL NO:RHINO-GX500

BLUETOOTH LED SOUNDBAR

SPEAKER /IP66 WATERPROOF /UTV ATV/GOLF CARTS

OVERVIEW DIAGRAM

MODELNO: RHINO-GX500
BLUETOOTHLEDSOUNDBAR
8SPEAKER|IP66WATERPROOF|UTV/ATV/GOLFCARTS

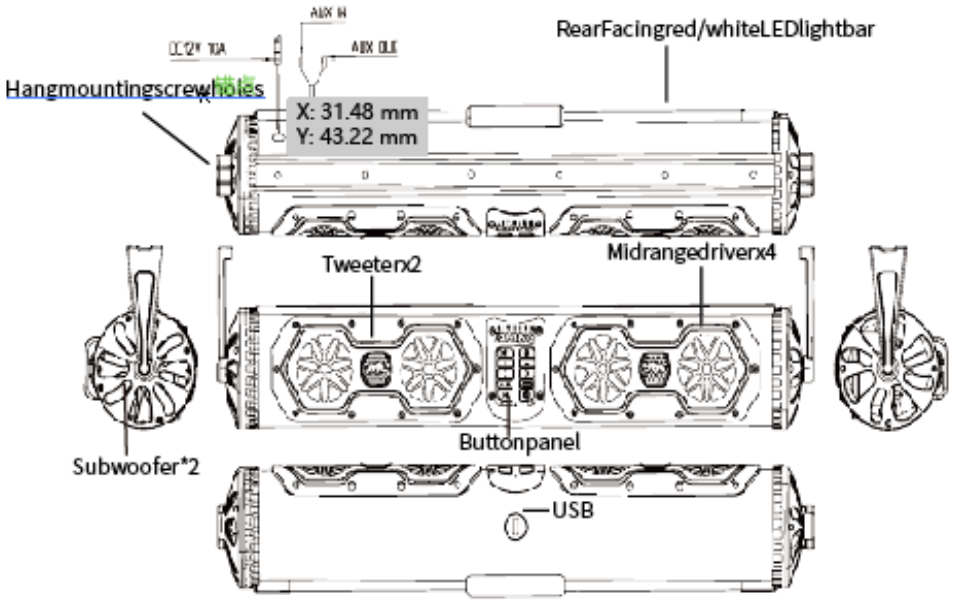

Product Dimensions:
Length: 27"
Width: 4.5"
Height: 4.5"
Marine-grade speakers in IP66 Patent Pending enclosure provide waterproof and dust-proof audio.
500 watts of peak power output.
8 Marine-grade speakers, 2 tweeters, and 4 mid-range and 2 side-mounted woofers.
Two internal, independently sealed cavities for true left and right stereo sound.
Bluetooth 5.3 for long-range wireless connection to a smartphone (up to100ft/30m).
Broadcast allows up to 100 soundbar strobes connected together to connect
to any speaker with the broadcast feature.
Integrated on speaker controls: power, mode (Bluetooth/Aux-in/broadcast), volume, skip FWD/Back.
Built-in microphone for speaker phone calls.
Multi-color LED backlights on all 8 speakers.
Choose from the Default gradient (sync to music), red, blue, green, purple, yellow, and white.
The rear-facing red/white LED lightbar can be turned on separately from the speaker LEDs.
Waterproof 12V auxiliary power-out connection cables to connect to your vehicle's battery. Waterproof Aux In to connect or to play audio from a wired device.
Waterproof Aux Out to connect to daisy chain or other optional wired speakers.
Waterproof 5V=1A USB charging port to give a boost to your phone or other devices and Play USBS tick Music.
Mounting brackets and integrated threaded mounting holes allow for multiple mounting configurations.
Long-range RF remote control control lights and audio functions.
Input Voltage: 12V DC, 10A (requires connection to an external DC battery for power).
Bluetooth Name: RHINO-GX500

FUNCTIONDESCRIPTION

1. Interconnect Button: Long press to switch the host mode and slave mode, respectively.
2. Volume Increase Button: Long press and click to increase the volume to maximum.
3. Song Reverse Button: Click to play the previous song.
4. Speaker LED Button: Click to switch between the 7 light colors of LED. Choose from the Default gradient (sync to music), red, blue, green, purple, yellow, and white, and long press to turn off the light.
5. Play/Pause/Hold a Call: Click to play/pause when music is playing. Short press in Bluetooth mode to hold/hang a call, and long press in FM mode to automatically search and store radio stations.
6. Mode Button: Click to switch between Bluetooth mode, LINE IN mode, USB mode (only when USB is inserted), and FM mode.
7. Volume Reduction Button: Long press and click to reduce the volume of the prompt tone.
8. Song Forward Button: Click to play the next song.
9. LED Strip Button: Click to switch the color of the LED Strip (red/white). Long press to adjust the light brightness (default is 100%, long press is 75% and 50%).
10. On/Off Button: Long press to turn the power on/off. The blue light will be on the host, and the red light will be on the slave. Double-click to disconnect the Bluetooth link.

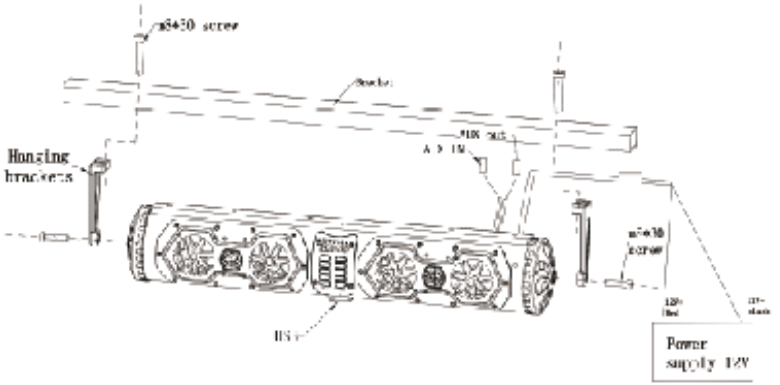

FCC Warnning:

This equipment has been tested and found to comply with the limits for a Class B digital device, pursuant to part 15 of the FCC Rules. These limits are designed to provide reasonable protection againstharmful interference in a residential installation. This equipment generates, uses and can radiateradio frequency energy and, if not installed and used in accordance with the instructions, maycause harmful interference to radio communications. However, there is no guarantee thatinterference will not occur in a particular installation. If this equipment does cause harmfulinterference to radio or television reception, which can be determined by turning the equipmentoff and on, the user is encouraged to try to correct the interference by one or more of thefollowing measures:

- Reorient or relocate the receiving antenna.
- Increase the separation between the equipment and receiver.
- Connect the equipment into an outlet on a circuit different from that to which the receiver is connected.
- Consult the dealer or an experienced radio/TV technician for help.

Caution: Any changes or modifications to this device not explicitly approved by manufacturer could void your authority to operate this equipment.

This device complies with part 15 of the FCC Rules. Operation is subject to the following two conditions:

(1)This device may not cause harmful interference, and (2) this device must accept any interference received, including interference that may cause undesired operation.

This equipment complies with FCC radiation exposure limits set forth for an uncontrolled environment. This equipment should be installed and operated with minimum distance 0cm between the radiator and your body.