DMR TECHNOLOGIES
DRONE MANUFACTURING + RESEARCH

Field Ranger X50

User Manual V1.1

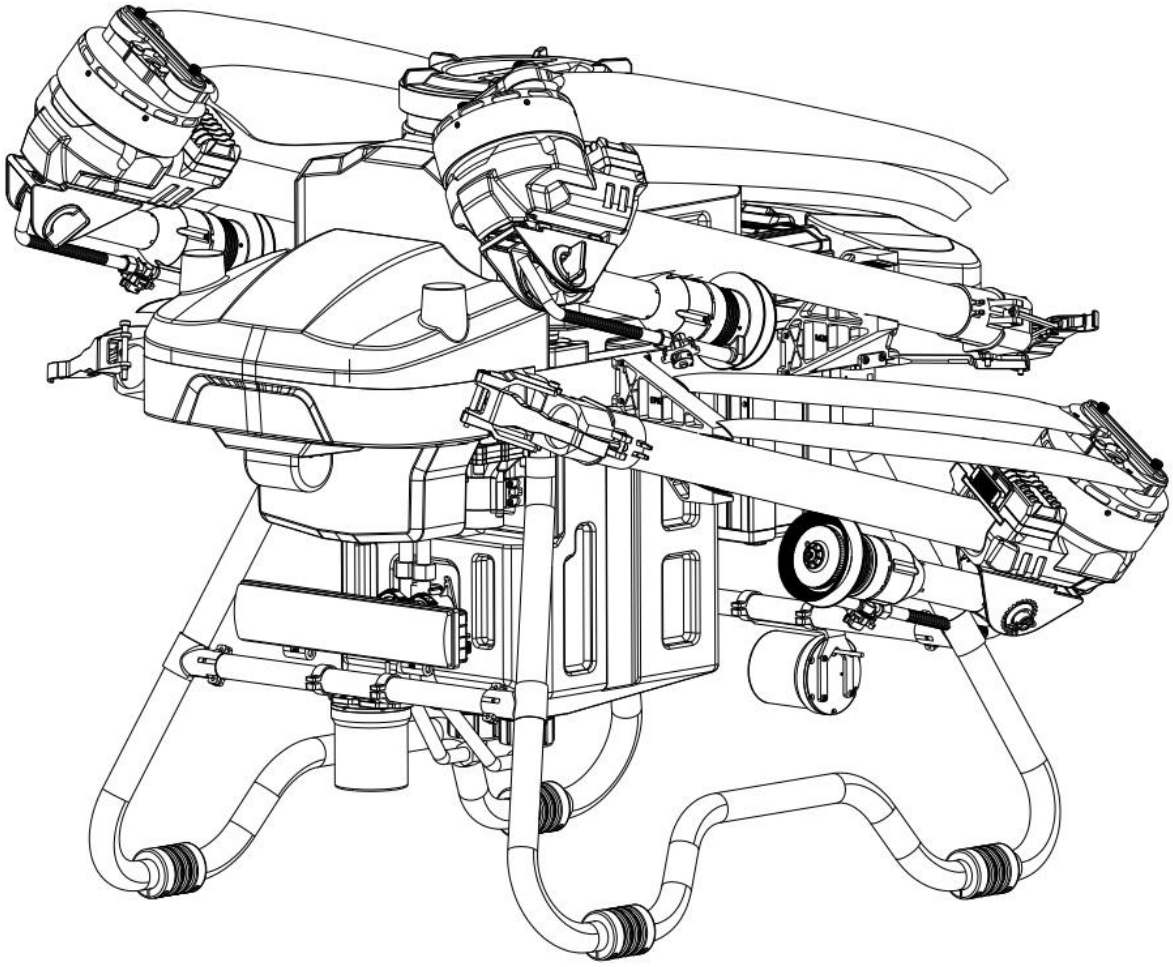

April 30, 2024

© 2024 DMR Technologies. All rights reserved.

Table of Contents

1. **Introduction** 3

2. Disclaimer 3

3. Intellectual Property 3

4. About This Manual 3

5. Safety Guidelines 4

5.1. Use of Pesticides 4

5.2. Operating Environment 4

5.3. Pre-Operation Checks 4

5.4. Operation 4

6. Product Overview 5
6.1. Introduction to the Remote Controller 5
6.2. Remote Controller Charging Steps 6
6.3. Drone Account Registration 7
6.4. Certification Process 7
6.5. Binding the Drone 7
6.6. Drone Overview 7
6.7. Drone Overview (continued) 8
7. Flight Instructions 12
7.1. Operational Environment Requirements 12
7.2. Flight Restrictions and No-Fly Zones 13
8. Basic Flight 13
8.1. Drone Power Supply 14
8.2. Motor Inspection 14
8.3. Compass Calibration 14
8.4. Tare Weight Adjustment 15
8.5. Weight Calibration 16
8.6. Spraying Calibration 16
8.7. Pre-Flight Status Check 16
8.8. Start and Stop the Drone 17
9. Starting Operation 18
9.1. Preparation for Operation 18
9.2. Manual Enhanced Mode Operation 19
9.3. AB Point Operation 19
9.4. Route Operation 19
10. APP Ground Station Instructions 19
10.1. Main Interface 19
10.2. Task Planning 21
10.3. Task Execution 23
10.4. Operation Modes 24
10.5. Smart Battery Protection Mechanism 26
10.6. UPS Function 27
10.7. Motor Check Function 27
10.8. Accelerometer Calibration 27

10.9. RTK Function 28
10.10. Language Switching 30
10.11. Map Switching 31
11. Upgrades 34
11.1. Tare Weight Calibration 35
11.2. Weight Calibration 35
11.3. Weight Sensor Calibration 35
11.4. Compass Calibration 36
12. Starting and Stopping the Drone 36
12.1. Motor Start - Unlock and Takeoff 36
12.2. Flight Operation 37
12.3. Stop Flight - Landing and Lock 37
13. Safe Storage Procedures 37
14. Flight Log 37
15. PC Agricultural Platform 38
16. Appendix 39
17. Manufacturer Information 39

---

1. Introduction

The Field Ranger X50 is a highly advanced multi-rotor drone. In terms of functionality, appearance, control, and safety, it has achieved industry-leading standards. However, due to the nature and structure of multi-rotor drones, this product carries inherent risks and potential hazards. Therefore, users must strictly follow the safety instructions and operational guidelines in this manual. Failure to comply may result in direct or indirect losses or harm.

2. Disclaimer

Before using the product, please read this manual carefully. Once you use the product, it will be considered as an acknowledgment and acceptance of all the terms in this statement. This product is suitable for individuals 18 years of age or older. The company is not liable for any personal injury or property damage caused by the following:

1. Users did not assemble or use the product according to this manual.
2. Users operate the drone under the influence of alcohol, drugs, fatigue, or in a physically or mentally unfit condition.
3. Users deliberately operate the drone to cause harm.
4. Users use non-company parts or modify the product, causing it to malfunction.
5. Damage caused by user errors or misjudgment.
6. Damage caused by natural wear, aging of circuits, or abnormal functioning of the drone.
7. Users knowingly operate the drone when it is malfunctioning.
8. Operation of the drone in extreme weather conditions such as typhoons, hail, or fog.
9. Flying the drone in areas with magnetic interference, radio interference, or government-designated no-fly zones.
10. Operating the drone when visibility is poor or in obstructed view conditions.
11. The use of this product to control the drone to obtain any data or images that result in infringement or other illegal activities.
12. Other losses not within the company's liability.

3. Intellectual Property

The intellectual property rights of this product and manual belong to DMR. Without written permission, no organization or individual may copy, reprint, or distribute it in any form. If citing, the source must be clearly indicated.

4. About This Manual

This manual serves as a guide for users. The photos, graphics, and illustrations provided are for explanatory purposes only and may differ from the actual product. Please refer to the actual product.

Due to product updates or other reasons, the contents of this document will be updated periodically without further notice. Please read this manual carefully before using the product.

5. Safety Guidelines

5.1 Use of Pesticides

- When using pesticides, always wear protective gear to avoid direct contact with the chemicals.
- Strictly follow the safety instructions provided by the pesticide manufacturer.
- Avoid using powdered pesticides, as they can reduce the lifespan of the spraying system.
- When mixing pesticides, use clean water to prevent clogs. Do not remove any filters, and if they become clogged, clean them before continuing to use the machine.
- After operation, promptly clean any remaining pesticide solution. Do not contaminate rivers or drinking water sources to ensure no harm is caused to people, animals, or the environment.
- The effectiveness of pesticides depends on factors like concentration, spray rate, flight speed, height from crops, wind direction, and wind speed. All of these factors should be considered when using pesticides to achieve the best results.

5.2 Operating Environment

- Fly in open areas away from crowds.
- It is recommended to fly below 2,000 meters altitude.
- Indoor flight is strictly prohibited.
- Fly in temperatures between 0°C and 40°C.
- It is recommended to operate in environments with wind speeds below Level 4.
- Do not fly in rain, fog, snow, or other extreme weather conditions.
- Steel-reinforced buildings may interfere with the compass and block GPS signals, making positioning less accurate or even impossible.
- Ensure there are no high-voltage lines, communication base stations, or transmission towers near the operation area to avoid electromagnetic interference.
- Always maintain visual line-of-sight with the drone and avoid obstacles, crowds, livestock, and water bodies.
- Fly in legal areas. Consult local aviation authorities before flying to ensure compliance with local regulations.

5.3 Pre-Operation Checks

- Ensure the remote controller battery and the power battery are fully charged (check the base station battery when using RTK).
- Ensure all components are intact. If any parts are worn or damaged, replace them before flying.
- Ensure the landing gear and spraying system are securely installed, and all screws are tightened.
- Ensure the propellers are undamaged and securely installed, and that the arms and propellers are fully extended and the arm nuts are tightened.

- Ensure the drone's motors are clean and undamaged.
- Ensure the spraying system is not clogged and is functioning properly.
- Check the app for any abnormal warnings before flying.

5.4 Operation

- Do not approach the rotating propellers and motors while the drone is in operation.
- Be cautious of potential pinching hazards when folding the arms of the drone.
- Ensure the drone's takeoff weight is below 108kg to avoid accidents.
- The operator must be professionally trained and certified. Untrained personnel should not operate the drone.
- When performing maintenance, replacing parts, adjusting equipment, testing, or upgrading the firmware, make sure the propellers are removed.
- Do not operate the drone under the influence of alcohol, fatigue, or illness.
- If the remote control signal is normal, you can manually control the flight speed and altitude.
- Always turn on the remote controller before connecting the power supply. After use, disconnect the power supply before turning off the remote controller.
- Pay close attention to the drone's status and the app status during flight. If any unexpected situation occurs, manually intervene to ensure safety.
- In specific flight modes or environments, the obstacle avoidance and terrain-following functions may not be available. Always monitor the drone's status and assess the flight conditions to avoid obstacles in time.

---

6. Product Overview

The X50 is a convenient, efficient, and economical foldable drone designed specifically for agricultural use. The downwash airflow generated by the rotor blades helps with the penetration of the pesticide into the crops, resulting in excellent pest control. The drone features a convenient wrap-around body design and modular maintenance structure. Its dual-pump precision metering spraying system supports one-click configuration for field applications. Additionally, it is equipped with an FPV (First-Person View) camera and obstacle avoidance system, making spraying operations simple and safe. The drone also supports a smart data platform, which efficiently transmits operational data through, enabling real-time monitoring and control via the backend system.

6.1 Introduction to the Remote Controller

1. **Functional Buttons Overview**
    - **(1)** Antenna
    - **(2)** Base station antenna
    - **(3)** Left joystick
    - **(5)** M+ left horizontal movement
    - **(6)** Power switch
    - **(7)** 5.5-inch display
    - **(8)** Handle
    - **(9)** Right joystick
    - **(10)** Spraying/Broadcasting switch
    - **(11)** M+ right horizontal movement
    - **(12)** SIM card slot
    - **(13)** Speaker

- **(14)** Charging port

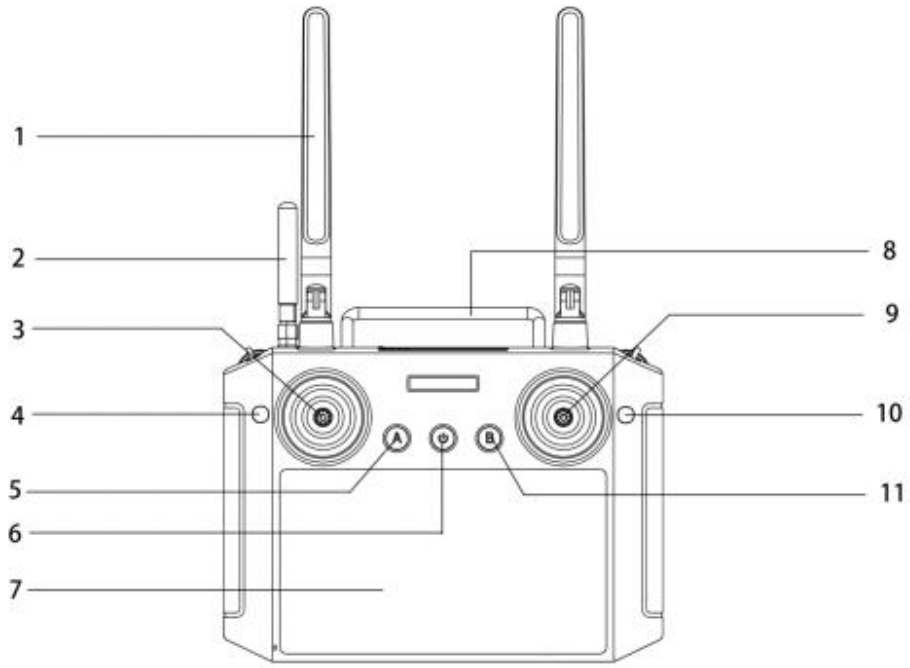

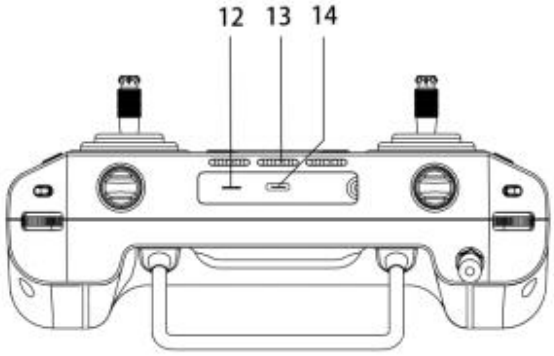

6.2 Remote Controller Charging Steps

1. Choose a suitable charger for the remote controller (5V-2.0A).
2. Use the included Micro-USB charging cable to connect the Micro-USB port on the back of the remote controller to the USB port of the charger.
3. Plug the charger into an appropriate power outlet. When the power button indicator flashes, charging is in progress. Once the indicator turns off, charging is complete.

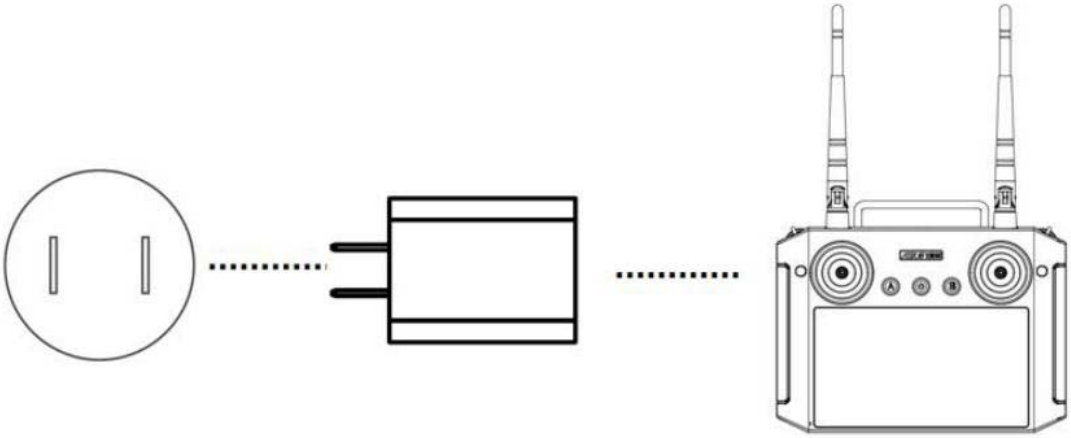

Important Notes:

- Do not use a USB charger with a rated voltage higher than 5V.
- The charging current for the remote controller should not exceed 2A.
- If there is an unusual smell or smoke coming from the remote controller, place it in a safe, open area to prevent fire hazards.
- Do not charge the remote controller if the ambient temperature exceeds 60°C.
- Keep the remote controller out of reach of children and monitor the charging process to prevent accidents.

6.3 Drone Account Registration

1. Registration requires an invitation code, which is used to identify the user type and is relevant for subsequent data management, equipment information viewing, and legal policies in different regions.
2. Please contact your dealer to obtain an invitation code.

6.4 Certification Process

1. **Real Name Certification:** Enter your ID number and upload photos of the front and back of your ID card.
2. **Certificate Validation:** Enter the certificate number and upload an image of the certificate.

6.5 Binding the Drone

1. Go to the "My" section and click on "My Agricultural Drone."
2. Enter the drone ID number (located on the drone's nameplate) and the activation code (on the drone body).
3. Once added, the corresponding drone will appear in the device list.

6.6 Drone Overview

I. Features

1. The X50 is made from carbon fiber, making it lightweight and strong. Its foldable arm design allows for easy transportation.
2. The drone can be controlled using a remote controller or through the mobile ground station APP for autonomous flight and spraying tasks.
3. Equipped with high-performance brushless motors, it has a long lifespan. It also includes an onboard RTK module, GPS, and IMU sensors for precise pesticide spraying.
4. The drone is compatible with the ground station system, which generates intelligent flight paths for fully autonomous pesticide spraying operations, reducing operator workload.
5. The drone is quick to prepare for takeoff, highly efficient, and has a high utilization rate, with one-key takeoff and fully autonomous operations.
6. It complies with national energy-saving and green agricultural development requirements, with easy maintenance and low operational and upkeep costs.

6.7 Drone Overview (continued)

II. Drone Components

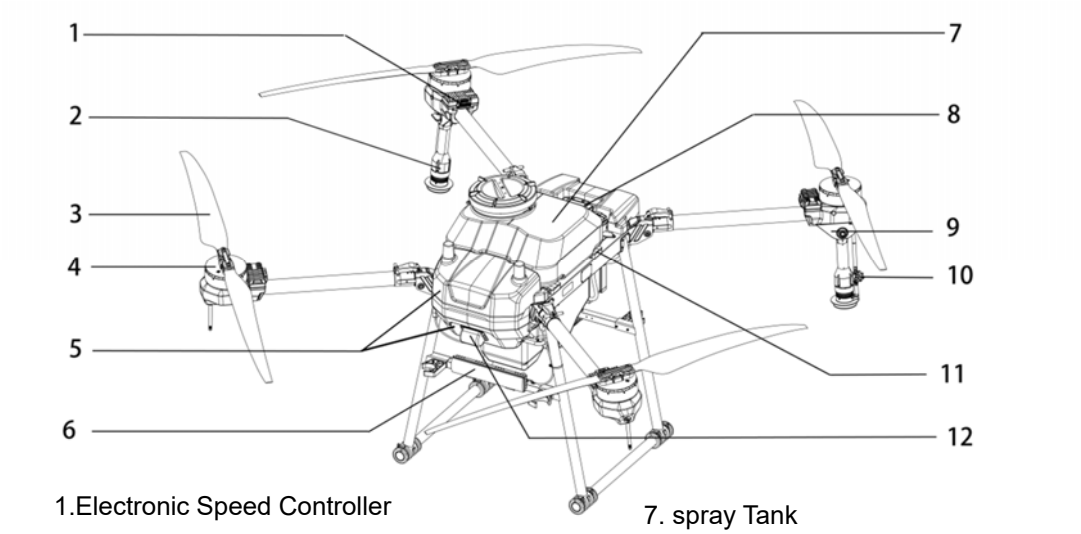

1.Electronic Speed Controller

2.Centrifugal Nozzle

3.propellers

4.Motors

5.Enclosure

6.spotlights

7. spray Tank

8. Battery

9. Centrifugal Nozzle Base

10. Pressure Relief Valve

11. Load Cell

12. FPV

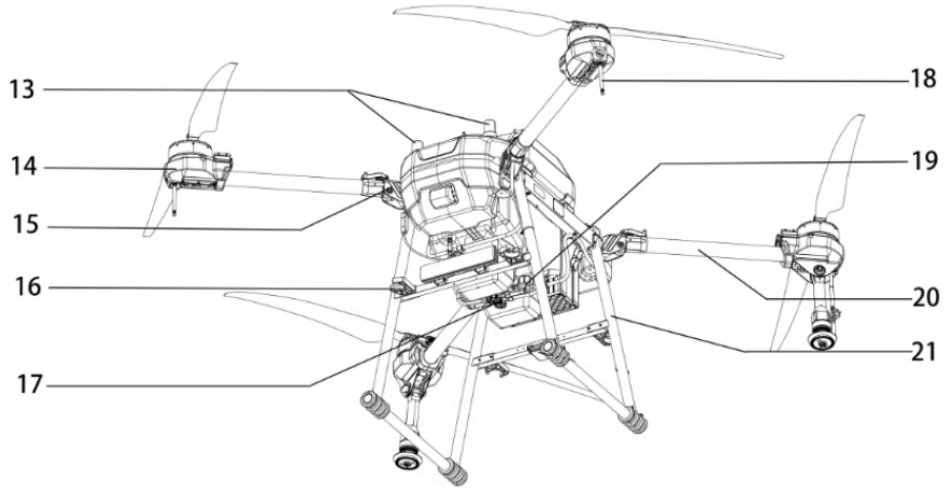

13.Onboard D-RTK antennas

14. Motor Protective Case

15.Arm Folding Parts

16. the arm fixed parts

17. Flowmeter

18. Data Link Antenna

19. spray Tank outlet

20. Frame Arms

21. Landing Gear

1. **Before unfolding the arms**
2. Check all parts to ensure they are intact and correctly installed.

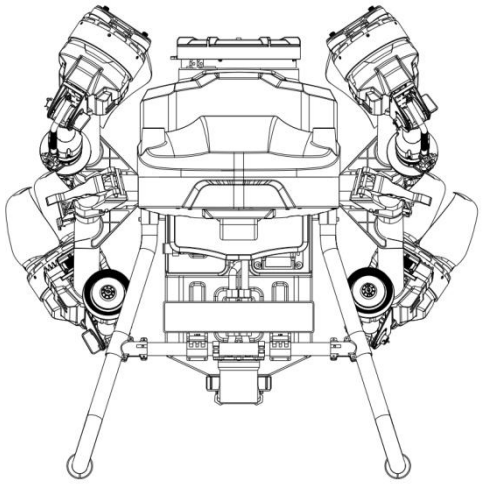

3. **Unfold the arms**
4. Press the handle until you hear a “click,” indicating the arms are securely in place.

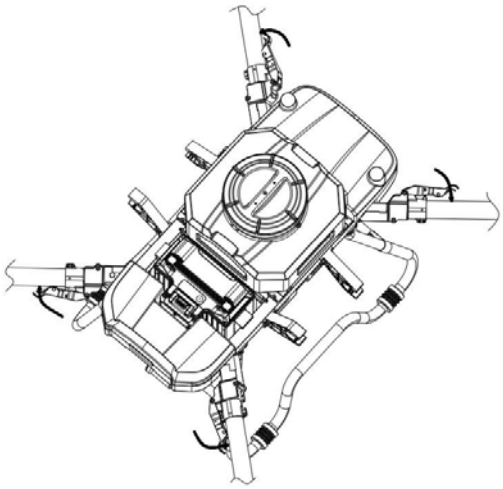

5. **Propeller Blades**
6. The propeller blades are foldable and can be easily unfolded to 180°.
7. *Figure shows propeller rotation direction*.

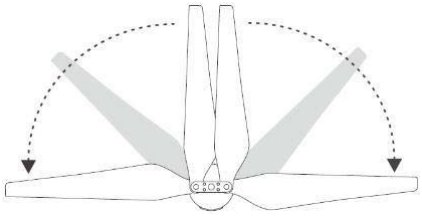

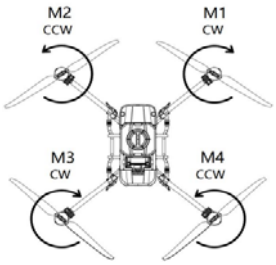

8. **Centrifugal Spray Nozzle**
9. Unfold the centrifugal nozzle until it is perpendicular to the ground.
10. *Figure shows the correct unfolding method*.

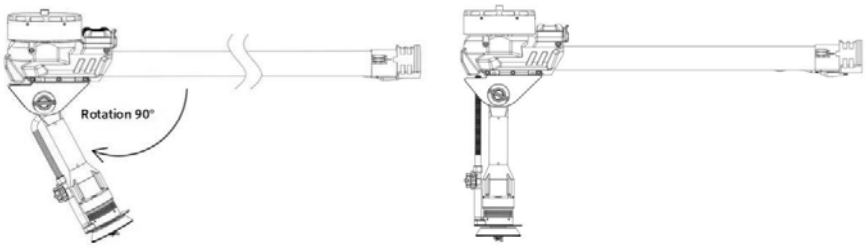

11. **Installing the Battery**
12. Insert the battery into its slot until you hear a “click,” indicating that the battery latch is securely locked in place.

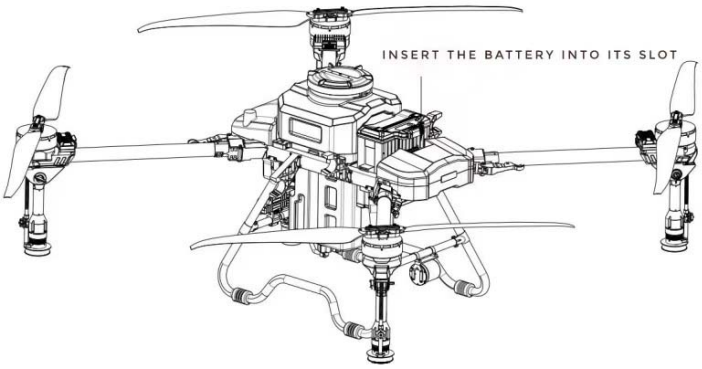

13. **Ready for Takeoff**
    - Power on the remote controller by long-pressing and then short-pressing the power button.
    - Locate and open the "Smart Flight" app interface on your device.

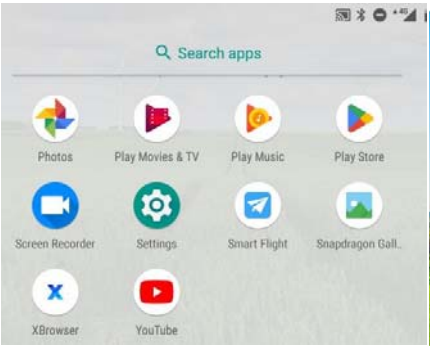

    - **Power on the battery**: Short press the battery button to check the battery level. To turn the battery on or off, short press followed by a long press. Always ensure the battery is off before inserting or removing it to avoid damaging the drone or battery connections.

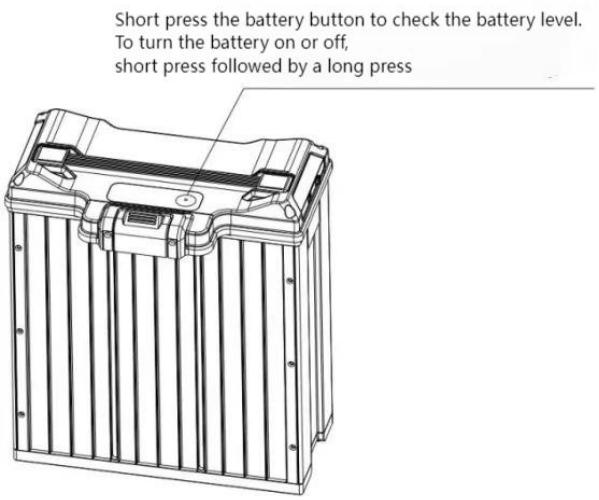

14. **Connecting to the Drone**
15. The connection status between the remote controller and the drone is displayed. Click the button

to connect or disconnect the drone.

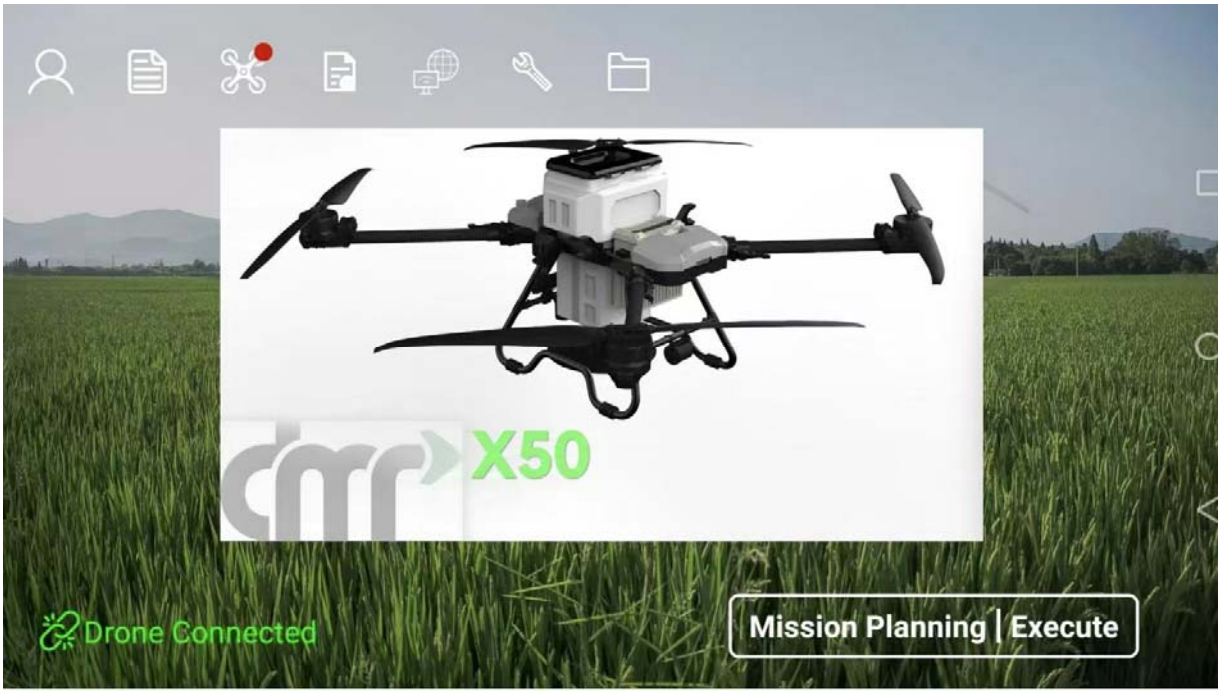

---

7. Flight Instructions

7.1 Operational Environment Requirements

1. **Avoid flying in extreme weather**
2. Do not operate the drone in conditions of high wind (8 m/s or higher), rain, snow, fog, or other adverse weather.
3. **Open spaces**
4. Choose an open space with no tall buildings nearby. Steel-reinforced buildings can interfere with the compass and block GPS signals, which may result in poor positioning or even loss of positioning.
5. **Maintain line-of-sight**
6. Always fly the drone within your visual line-of-sight, keeping it away from obstacles, people, livestock, and water bodies.
7. **Electromagnetic interference**
8. The operation area should be free from high-voltage power lines, communication base stations, or transmission towers that can cause electromagnetic interference.
9. **Good GPS signal**
10. Ensure that the GPS signal is strong before beginning the operation.
11. **Do not fly indoors**
12. Indoor flying is strictly prohibited.
13. **Polar regions**

14. In the polar regions, both GPS and compass functions may fail. In such cases, use attitude mode for flying.

7.2 Flight Restrictions and No-Fly Zones

According to the regulations of the International Civil Aviation Organization (ICAO) and the air traffic control authorities of various countries, drones must operate within designated airspaces. To ensure flight safety, flight restrictions are enabled by default, including height and distance limits as well as no-fly zones, helping users fly the drone safely and legally.

When the drone has GPS signal, the no-fly zones and altitude/distance limits jointly affect the flight. The available airspace is determined by the intersection of all restricted airspaces. If the drone does not have GPS signal, altitude limits set in the app will not apply.

7.2.1 Altitude and Distance Limits

- **Altitude Limit**
- Limits the maximum flight altitude. The drone cannot exceed the maximum altitude set in the flight app.
- **Radius Limit**
- The distance between the drone and the home point cannot exceed the maximum radius set in the flight app.

When GPS is available, if the drone crosses the set boundary due to inertia, the remote controller will still have control, but you cannot push the drone further. If the drone is outside the maximum radius and regains GPS, it will automatically return to within the set boundary.

7.2.2 No-Fly Zones and Restricted Areas

Includes restricted flight areas around airports and special restricted zones. For details, refer to the specific rules for restricted areas.

- **Automatic Landing**
- During landing, throttle control is disabled, but directional control (forward, backward, left, right) remains functional. Once the drone lands, the motors will automatically stop.
- **Status Indicator Light in No-Fly Zones**
- When the drone is in a no-fly zone, the status indicator light will flash red.
- **Avoiding Sensitive Areas**
- Avoid flying near airports, highways, railway stations, subway stations, city centers, etc. Fly within visual line-of-sight whenever possible.

---

8. Basic Flight

8.1 Drone Power Supply

- Turn on the battery by short-pressing and long-pressing the power button. Wait for the battery indicators to light up in sequence before releasing the button. Once the drone connects and completes satellite search, and the remote controller reports a good signal and the RTK turns green, the drone is ready for takeoff.

- If the remote controller has no network connection, the RTK will be unable to obtain positioning information.

8.2 Motor Inspection

- Enter the app's operation interface and click the "More Settings" button in the top-right corner. Go to the drone settings, and enter the motor inspection menu. Follow the app's prompts to check each motor, ensuring they are rotating in the correct direction.

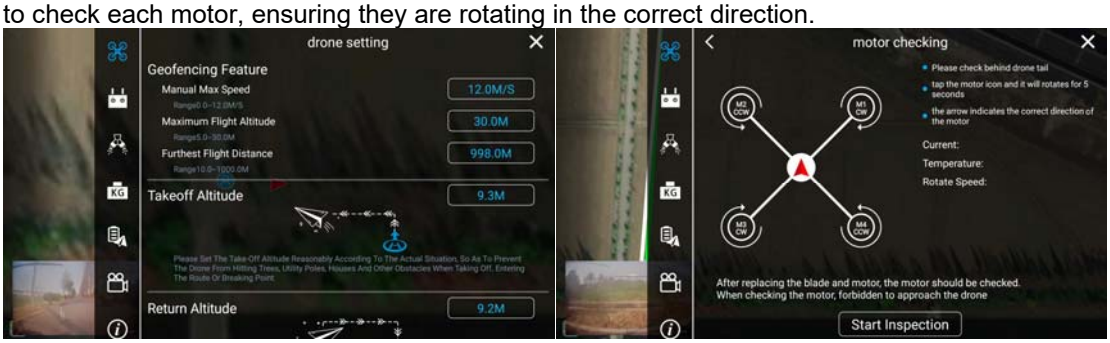

Motor Inspection Notes:

1. The purpose of the motor check is to ensure the correct rotation of motors and correct installation of propellers. Improper installation can cause the drone to crash, resulting in injury or damage.
2. Propellers are marked for identification: "CCW" (counterclockwise) and "CW" (clockwise).
3. During motor checks, stay behind the drone and keep a safe distance. Avoid approaching rotating motors or propellers.

Situations requiring motor inspection:

- After assembling the drone, or plugging/unplugging motor power or signal lines.
- After replacing the propellers, motors, arms, or any components affecting motor rotation.

8.3 Compass Calibration

- Enter the app's operation interface and click on the "More Settings" button in the top-right corner. Go to the drone settings and enter the sensor interface. Click on "Compass Calibration" and follow the prompts in the app to calibrate the compass.

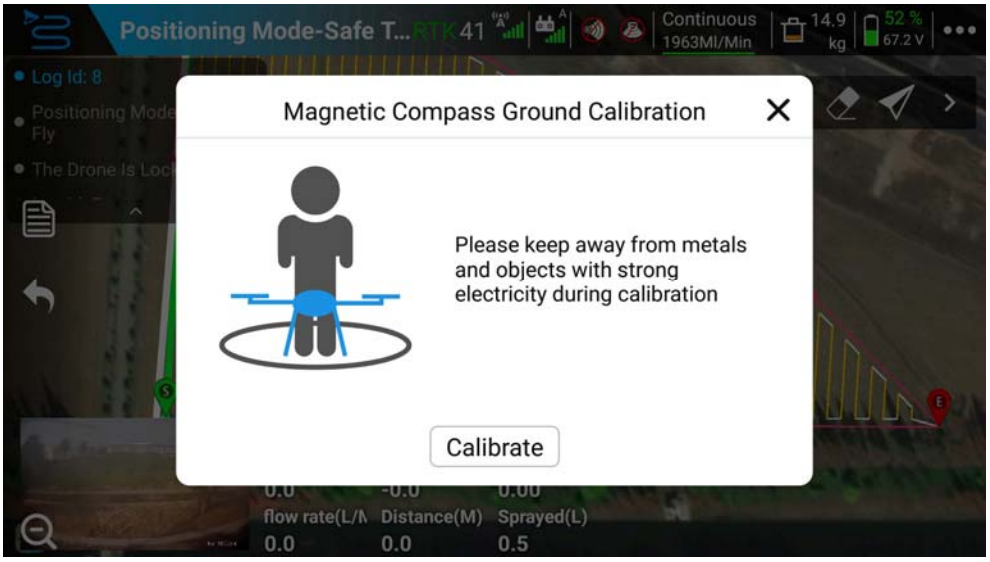

Compass Calibration Notes:

- Compass calibration is required in the following cases to ensure accurate flight direction. Otherwise, it may lead to flight safety issues:
  1. After assembling the drone.
  2. After replacing the GPS module.
  3. If the distance between the current flight location and the previous flight location is more than 100 kilometers.
  4. When the app prompts "Compass Abnormal" or when there are deviations in flight direction.

8.4 Tare Weight Adjustment

- Tap the "Tare Weight" icon and place the drone on a level surface. Empty the operation box and reset the weight system to zero.

  Note: Tare weight adjustment is generally performed before the operation. If the displayed weight is still incorrect after adjustment, calibration is necessary.

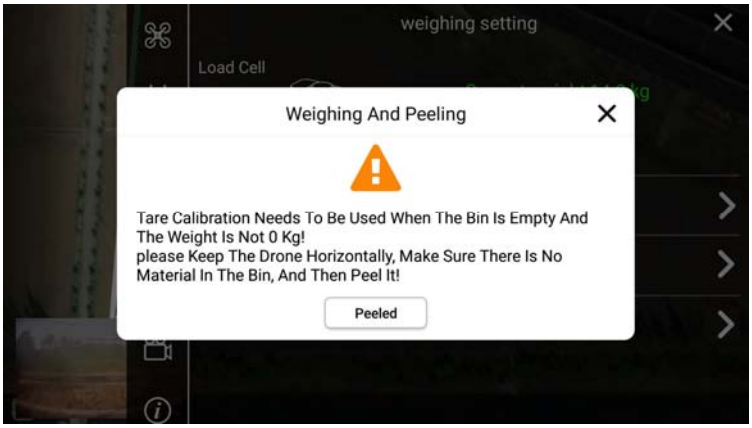

8.5 Weight Calibration

- Place the drone's battery in the pesticide tank, and after clicking "Done," check whether the current weight is 13.5kg (which is the battery's weight). Alternatively, add a certain amount of material to the tank, manually input the material's weight, and click "Calibrate."

  Note: Tare weight adjustment must be performed before calibration. If the weight is still inaccurate after calibration, perform sensor calibration.

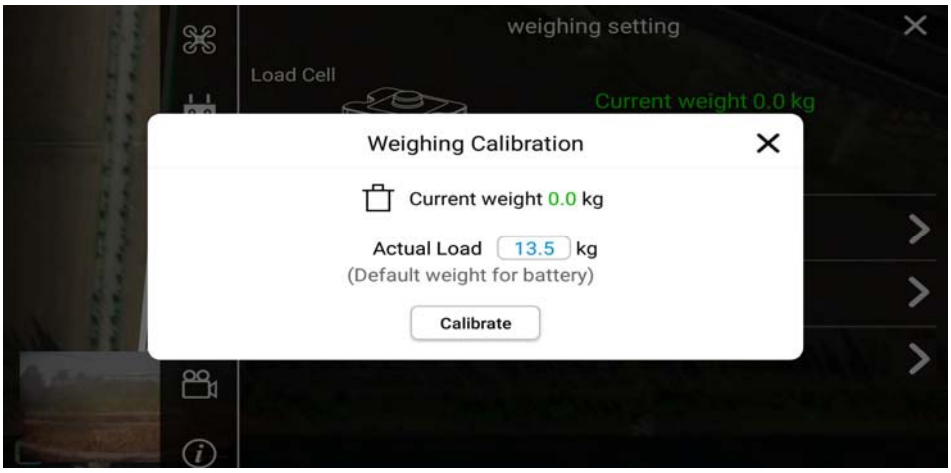

8.6 Spraying Calibration

- Add 35 liters of clean water to the pesticide tank and click to start the spraying calibration. The system will record the maximum flow rate of the pump. If the app reports a low flow rate, check if the filter is clogged.

8.7 Pre-Flight Status Check

1. **Safe Distance**
2. The operator should stand facing the tail of the drone, maintaining a safety distance of at least 10 meters away from the drone.
3. **Check Remote Control Mode**
   - Enter the app's operation interface and check the control mode in the parameter information bar. Ensure that the remote control mode is correctly set (abbreviations: US—American mode, CN—Chinese mode, JP—Japanese mode). If the mode needs to be changed, go to "More Settings" -> "Remote Control Settings" -> "Change Control Mode."
   - The default factory setting is American mode, and all instructions and diagrams in this manual use American mode as an example.
4. **Check System Status**
5. Confirm that all parameters in the app's operation interface are normal before unlocking the drone. Check the status bar for any abnormal warnings and ensure the equipment status bar is green before proceeding with a safe takeoff.

6. **Unlock and Takeoff**
7. Perform the "inward push" motion on both joysticks to unlock the drone. The drone will emit a warning sound, the motor indicator lights will blink, and the propellers will start spinning at idle speed after 3 seconds. Push the throttle stick upward, and the drone will take off.

Note: While the drone is in the air, avoid performing the outward push motion, as this will stop the propellers and cause the drone to crash.

8.8 Start and Stop the Drone
Start the Motor - Unlock and Takeoff
Rotate left and right joysticks in the shape of intoeing, the drone will be unlocked, and the propellers will rotate at idle speed. Push the throttle stick up, and the drone will take off.

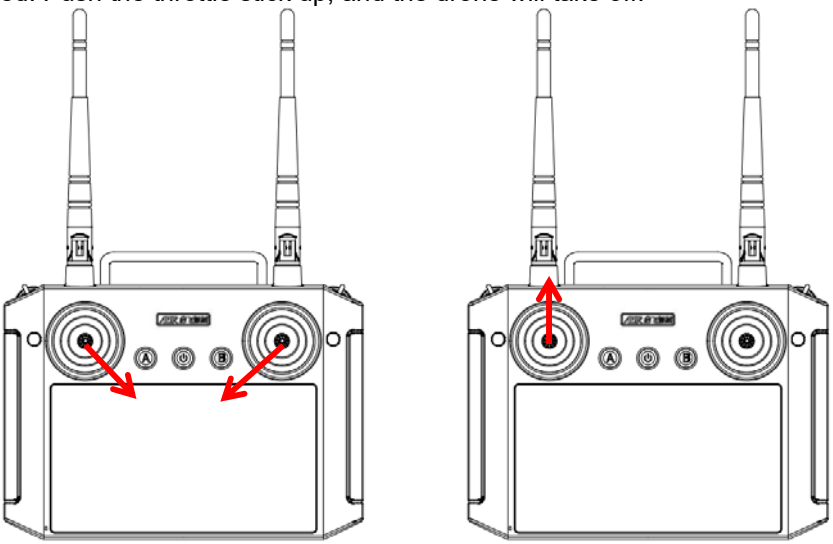

Rotate the joystick in the shaping of intoeing (USA style, Japanese style) Take off by pushing the throttle up (USA style as an example)

Operate the Flight

Operate the drone forward, backward, left, right, turn left, turn right, ascend, and descend by manipulating the joystick according to the corresponding control mode. Refer to the diagram of APP operation modes for specific operating methods.

Stop the Flight - Land and Lock

Pull down the throttle stick until the drone lands on the ground. After landing on the ground, rotate left and right joysticks in the shape of outtoeing or pull the throttle stick to the lowest position to lock the drone, i.e., stop the propellers.

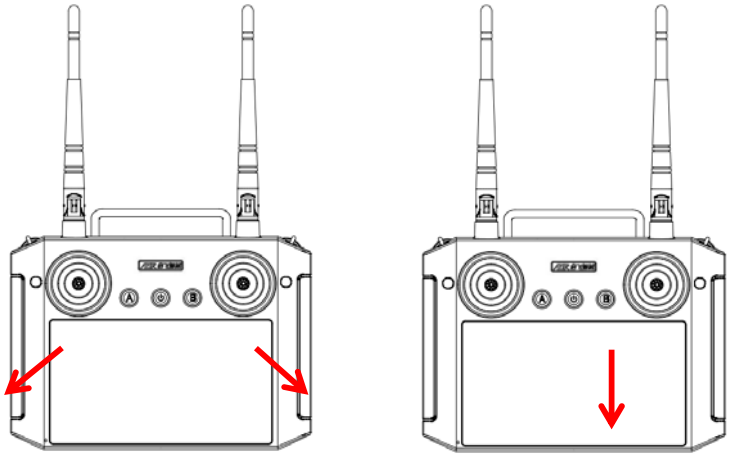

Rotate left and right joysticks in the shape of outtoeing to lock the drone (USA style, Japanese style)
Pull down the throttle to lock (USA style as an example)

⚠High-speed rotating propellers are dangerous, so users should maintain a safe distance from the drone, and the drone should stay away from crowds, animals, or other obstacles.

When the drone is flying in the air, do not rotate left and right joysticks in the shape of outtoeing; otherwise, the drone will stop the propellers in the air.

In case of a malfunction or operational error causing the drone to fly towards crowds, vehicles, animals, buildings, etc., rotate left and right joysticks in the shape of outtoeing promptly to stop the drone and minimize accidents and losses.

After landing, turn off the drone's power first, then turn off the remote control.

---

9. Starting Operation

9.1 Preparation for Operation

- **Adding Pesticides:** Pour the pesticide solution into the tank.
- **Air Purging:** Press the "Spray" button on the remote controller or enter the app's "More Settings" -> "Spray Settings" -> "Pipeline Air Purging" interface -> Start spraying to purge the air from the system.

9.2 Manual Enhanced Operation Mode

- Enter the app's operation interface -> Click "Start Operation" -> Select "Manual Enhanced Operation (M+)" -> Set operation parameters -> Unlock and takeoff -> Tap "Start M+ Operation" in the app -> Fly the drone to perform the spraying task -> Tap "End M+ Operation" -> Review the operation report -> Confirm by tapping "OK" to end the operation.

9.3 AB Point Operation

- Enter the app's operation interface -> Click "Start Operation" -> Select "AB Operation" -> Set operation parameters -> Unlock and takeoff -> Fly the drone to a suitable position at one end of the field -> Tap the "A" button in the app to mark point A -> The drone will begin spraying according to the set parameters -> Fly the drone to the other end of the field -> Tap the "B" button in the app to mark point B -> Choose the direction for the drone to follow -> Conduct a pre-operation check -> Start AB Point Autonomous Operation -> Tap "End AB Operation" -> Review the operation report -> Confirm by tapping "OK" to end the operation.

9.4 Route Operation

- **Field Mapping:**
- Enter the app's "Task Planning" interface -> Tap "Add Field" -> Select a method to create the field -> Add boundary points, obstacle points, and reference points -> Save the field.
- **Task Execution:**
- Enter the app's "Task Execution" interface -> Tap "Start Operation" -> Select "Route Operation" -> Choose the pre-planned field -> Edit field parameters -> Tap "Execute Task" -> Set operation parameters -> Upload the route -> Perform pre-operation checks -> Start autonomous route operation -> After completing the route, review the operation report -> Confirm by tapping "OK" to end the operation.

Note: During operation, you can control the throttle to maintain the current altitude. When the throttle is in the neutral position, the drone will hold its altitude.

---

10. APP Ground Station Instructions

10.1 Main Interface

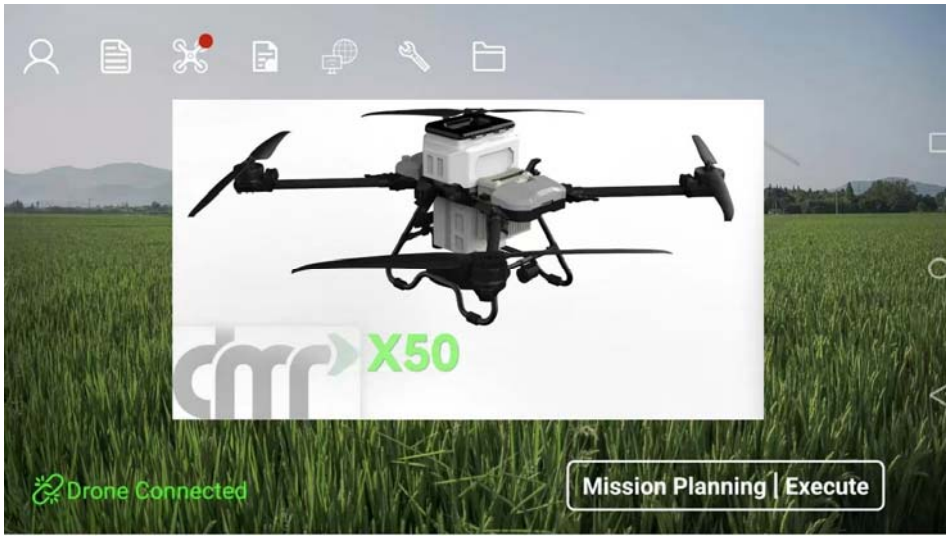

- **User Information:**
- Allows you to log out, complete real-name certification, operator certification, add drones, and more. Drones must be added before they can be controlled.

- **Operation Records:**
- Allows playback of operation records, filtering and statistical analysis of records, and synchronization of local records with the cloud backend.

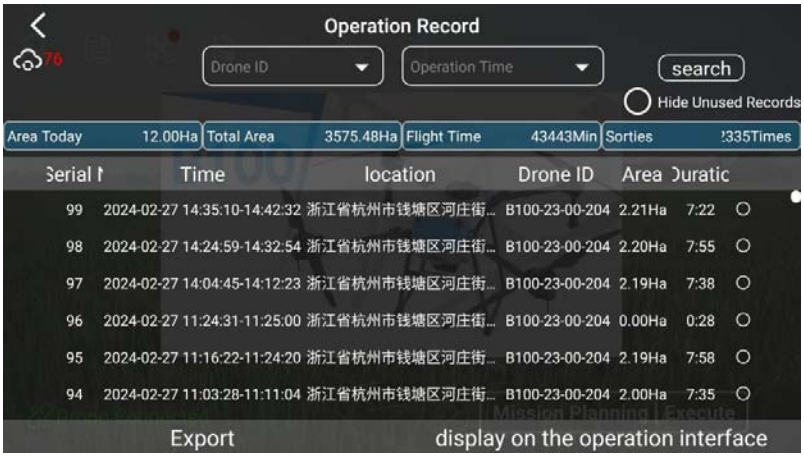

- **Sync Operation Records:**
- Sync your operation records to the cloud. The exported files are stored in the following path: agr->record->export.

- **Device Information:**
- View the version information of connected drones. You can perform upgrades and downgrades.

- **Log Upload:**
- Upload flight logs by connecting the remote controller.

- **Ntrip RTK:**
- Configure the RTK's IP address, mount point, and account information. The Ntrip RTK function must be enabled.

- **KMZ/KML File Import:**
- Import pre-mapped KMZ/KML files into the remote controller.

10.2 Task Planning

- **View, Edit, or Call Existing Fields:**
- Access previously created fields, or use the drone or RTK marker to create new ones.

- **Field List:**
- Manage fields by sharing, deleting, editing, or synchronizing them.
- **Adding a Field:** Tap "Add Field" and select a method to add boundary points to the field.

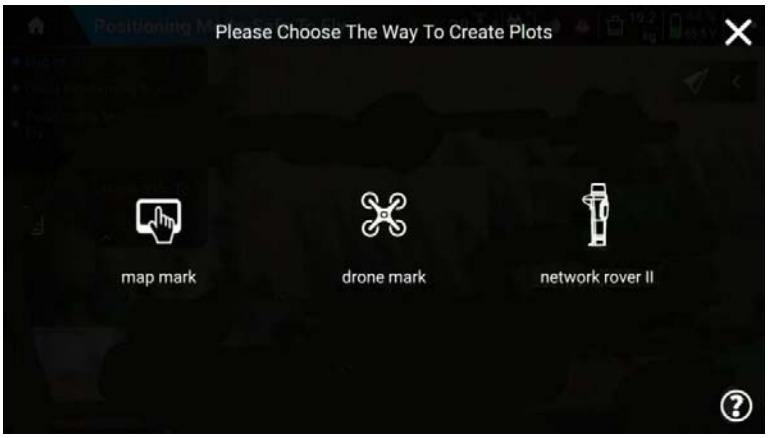

  - **Map Pointing:**
  - Suitable for open fields without obstacles. The accuracy is relatively low, so use with caution.

- **Place boundary points:**
- Drag the map to align the marker with the edge of the field boundary, then tap to mark the boundary point.
- **Boundary Types:**
- Switch between boundary points, inserted points, square obstacle zones, circular obstacle zones, no-spray zones, and reference points.
- **Square Obstacle Zones:**
- Mark the edges of square-shaped obstacles in the field.
- **Circular Obstacle Zones:**
- Create a circular obstacle zone by tapping the center and adjusting its radius.
- **No-Spray Zones:**
- Mark areas where spraying is not needed to optimize the flight path.
- **Reference Points:**
- Place a reference point at a prominent location near the field to correct potential map offset errors.

o **Clearing Points:**
o Remove unwanted boundary points or zones by tapping to select and clear them.

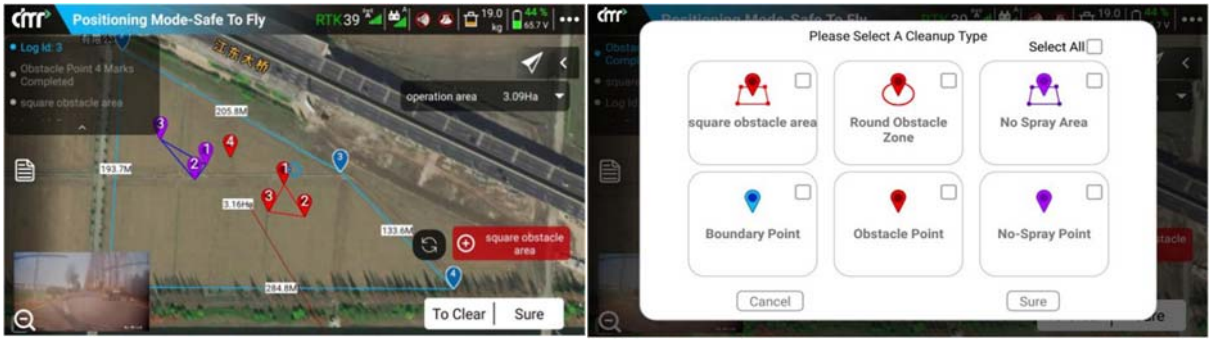

o **Drone-Based Pointing:**
o Use the drone to fly along the edge of the field and mark boundary points while flying.
o **RTK Marker-Based Pointing:**
o Walk along the field boundary with the RTK marker to mark boundary points.

10.3 Task Execution

- **Drone Information:**
- Tap the status bar 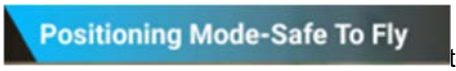

to view detailed information about the drone. Tap any device icons to get more details about the corresponding device.

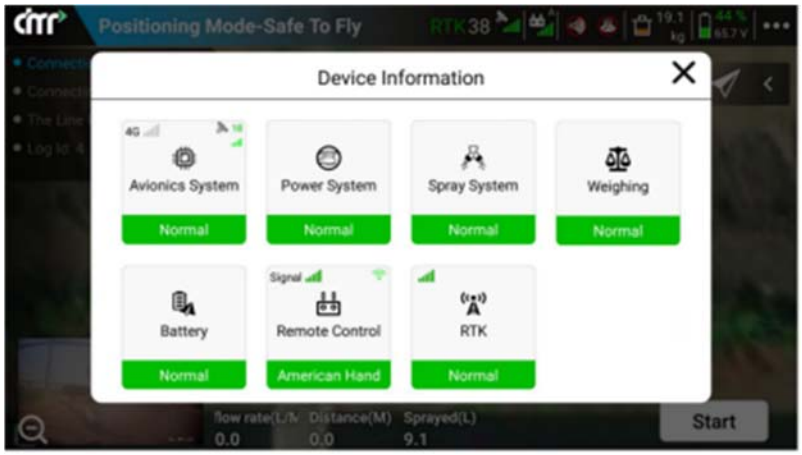

- **RTK Status:** 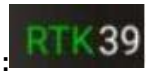

- The RTK status indicates the current number of satellites and the RTK connection status using different colors:
    - Green: RTK is fully connected, with accurate differential data.
    - Orange: The RTK is in floating-point mode, calculating differential data.
    - Red: RTK signal is poor or unreliable.
- **GPS Positioning:**

:
- If RTK is turned off, the drone will use GPS for positioning. The color-coded status of the GPS is:
    - Grey: No GPS signal.
    - Red: Less than five satellites.
    - Orange: 5–16 satellites.
    - Green: More than 16 satellites.
- **More Settings:**
- Access advanced settings through the “More Settings” menu.

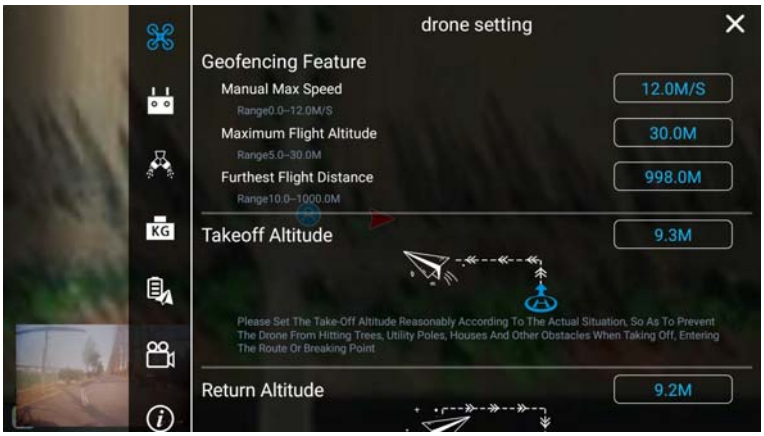

- **Map Tools:**
- Toggle between various map tools to adjust your view and interaction with the map.

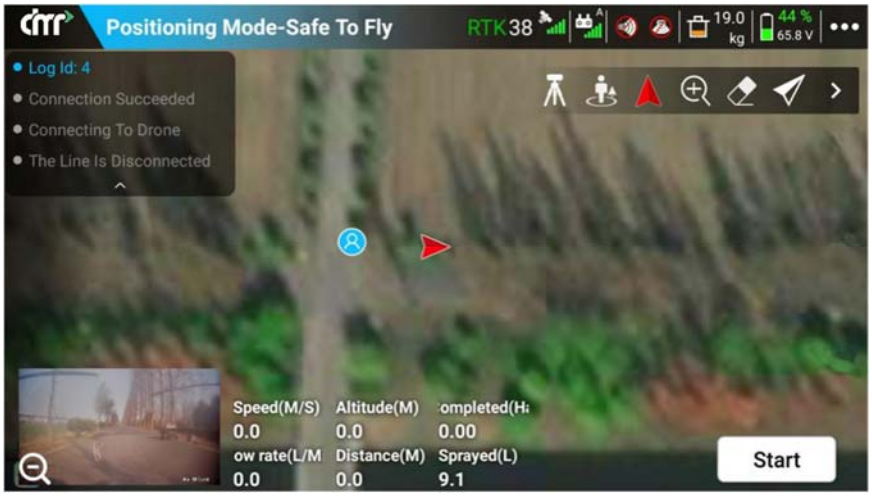

- **Operational Parameters:**

View and adjust flight parameters such as speed, altitude, and pesticide flow rate. Monitor sprayed area and consumed pesticide.

10.4 Operation Modes

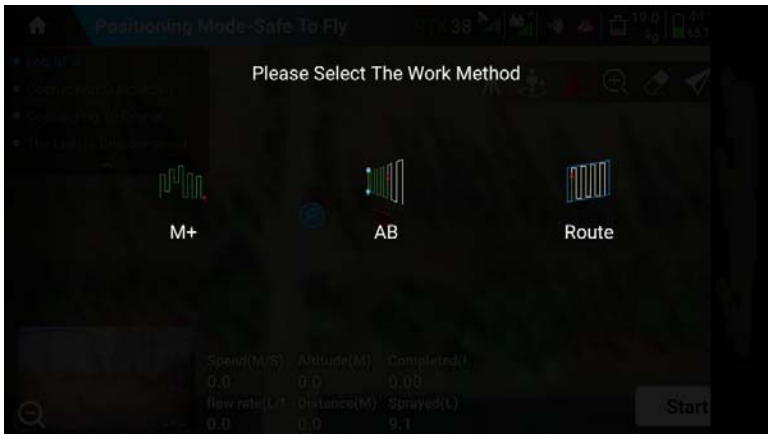

- **M+ Mode (Enhanced Manual Operation):**
- This mode is suitable for small irregular fields or temporary tasks where no pre-planning is needed. In this mode, the drone can lock its heading direction to prevent unintended deviations

from the flight path. It also allows lateral movement to the left or right, which needs to be set in advance.

- **Parameter Settings:**

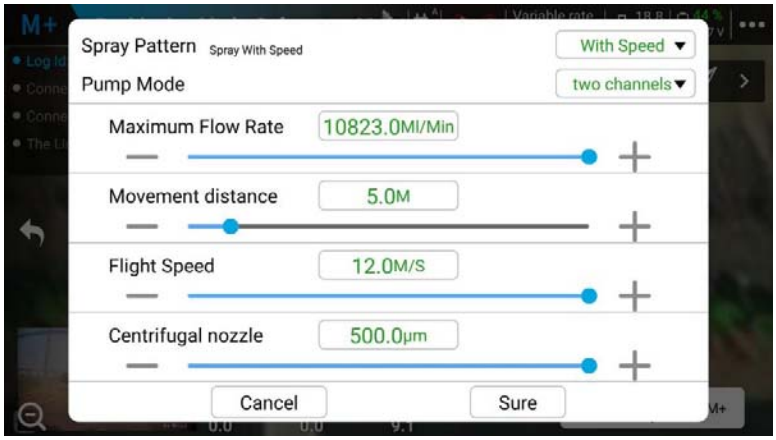

  - *Pesticide Use per Acre:* Set the amount of pesticide needed per acre.
  - *Lateral Movement Distance:* Set the distance for the drone to move sideways. Recommended setting: 6–8 meters.
  - *Flight Speed:* Faster flight speeds increase efficiency.
  - *Centrifugal Nozzle Speed:* Adjust the nozzle rotation speed. Higher speeds create finer spray particles.

- **Spraying Mode:**

  - *Precision:* The flow rate is automatically calculated based on the lateral distance and speed to ensure accurate application.
  - *Speed-Based:* The flow rate is adjusted based on the drone's speed.
  - *Continuous Spraying:* Spraying is constantly on.

- **Water Pump Mode:**

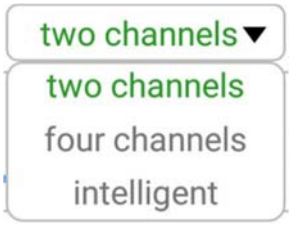

  - *Dual-Pump Mode:* Best for small acreages requiring a lower application rate.
  - *Quad-Pump Mode:* Suitable for high-efficiency operations with a four-nozzle configuration.

        - *Smart Mode:* Automatically selects the optimal pump mode based on the set pesticide usage per acre.
    - Start spraying by tapping the “Start” button in the app or using the spraying switch on the remote controller.
    - When the pesticide tank is empty or the battery is low, the operation will pause. Refill the tank or change the battery, then tap “Continue” in the app to resume the operation.
    - **Operation Parameters Adjustment:**
    - During operation, you can modify the settings by opening the operation parameters pop-up window and adjusting them as needed.

10.5 Smart Battery Protection Mechanism

1. **Communication Protection:**
2. When the battery fails to communicate with the drone, takeoff will be restricted. During flight, if communication is lost or delayed, the drone will pause in mid-air. Contact support for assistance.
3. **Overcharge Protection:**
4. If the battery’s maximum cell voltage exceeds 4.35V, the drone will not be able to take off. Contact support for assistance.
5. **Cell Voltage Difference:**
6. Before takeoff, if the static cell voltage difference exceeds 300mV, the drone will be unable to take off. During flight, if the dynamic voltage difference exceeds 300mV for more than 3 seconds, the drone will pause and hover.
7. **Low Battery Voltage:**
8. The drone will not be able to take off if the battery voltage drops below 3.4V per cell or if the battery charge is less than 20%. The drone will automatically force-land when the battery charge drops below 5%.
9. **Overheating Protection:**
10. If the battery temperature exceeds 75°C before takeoff, the drone will not be able to take off. During flight, if the temperature exceeds 90°C, the drone will hover and pause the operation.
11. **Low Temperature Protection:**
12. Flights are prohibited if the battery temperature is below -5°C. Between -5°C and 10°C, flights are permitted only without a payload. Pre-warm the battery using a hover flight until the temperature exceeds 10°C before normal operations.

10.6 UPS Function

When the UPS function is enabled, removing the battery will not immediately cut the power to the flight controller, allowing you to replace the battery without needing to reboot the system. If a new battery is not inserted within 20 seconds, the drone will shut down completely.

Note: When performing operations such as compass calibration that require a reboot, make sure the drone is fully powered off before restarting, otherwise, the reboot may fail.

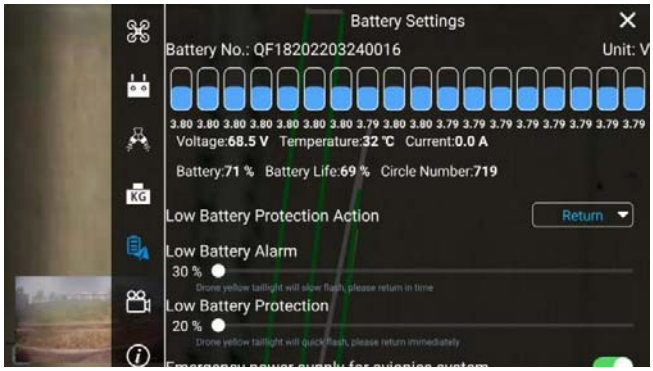

10.7 Motor Check Function

Refer to the motor inspection procedure described earlier for details on how to use the motor check function.

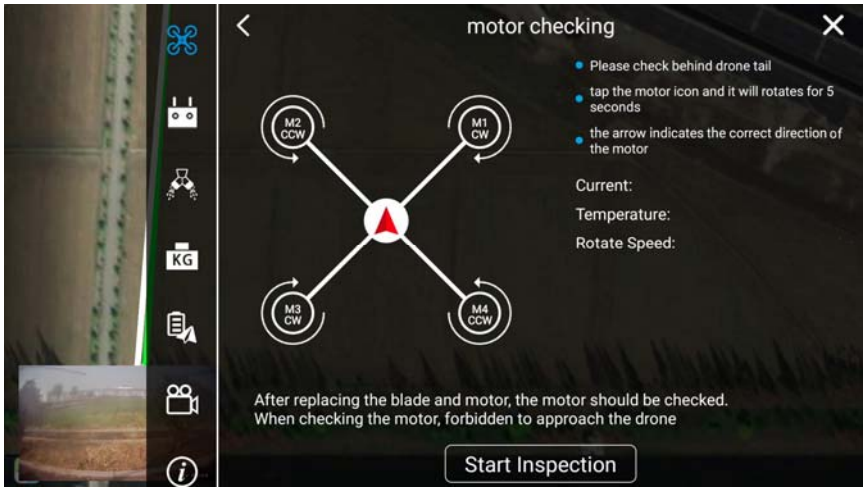

10.8 Accelerometer Calibration

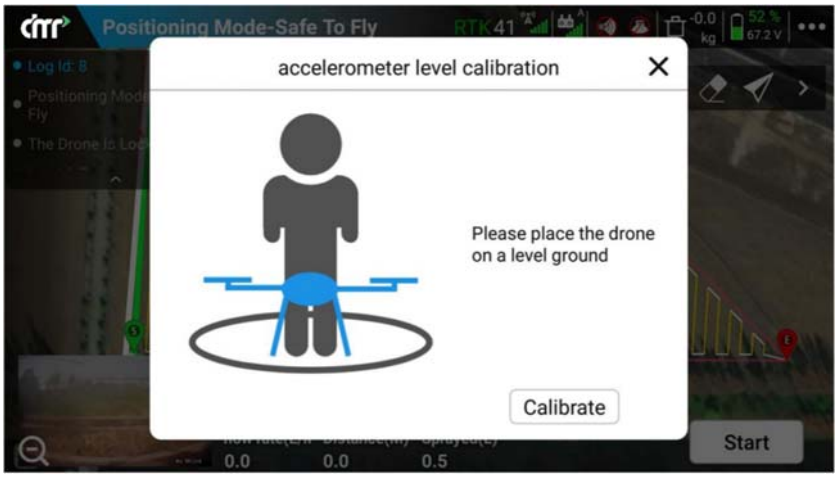

To perform accelerometer calibration, enter the app's operation interface, click on the "More Settings" button in the top-right corner, go to the drone settings, and access the "Sensors" menu. Click on "Accelerometer Calibration" and follow the prompts to complete the calibration.

Situations requiring accelerometer calibration:

- If the drone drifts while hovering, even with normal GPS positioning.
- If the app displays "Accelerometer Error," perform the calibration before the next flight.

Note: The accelerometer is calibrated at the factory, so users don't need to recalibrate unless the drone exhibits abnormal behavior.

10.9 RTK Function

Network RTK: RTK (Real-Time Kinematic) allows for centimeter-level positioning accuracy, providing strong resistance to electromagnetic interference.

Steps to enable RTK:

1. Enter the app's operation interface and go to "More Settings." In the drone settings, toggle the "RTK" switch to enable RTK functionality and RTK heading.

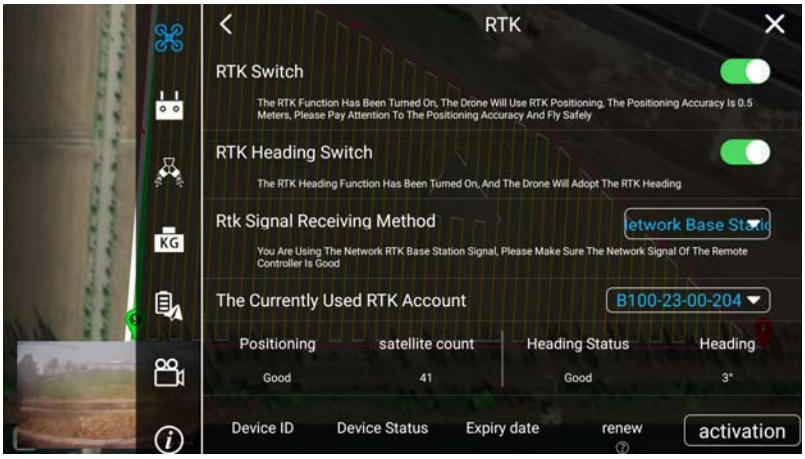

2. Ensure the remote controller has an active internet connection.

3. In the RTK settings menu, select your RTK account and verify that it is still active. Expired accounts must be renewed.

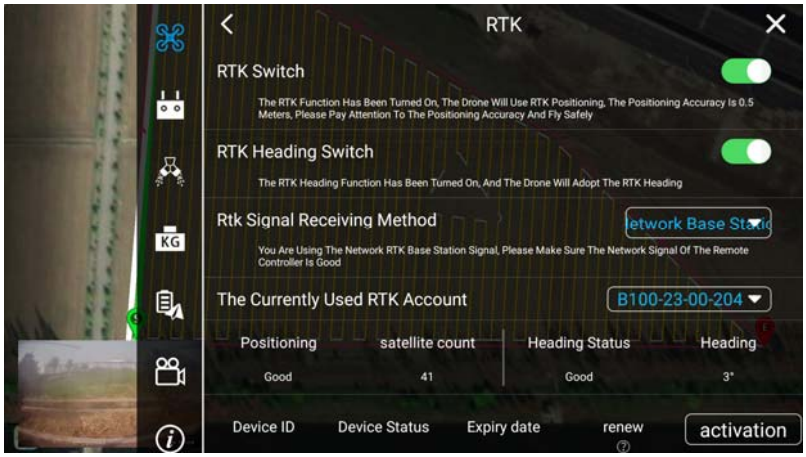

RTK Signal Sources:

- **Network Base Station:** This option uses a network RTK base station for positioning, requiring a stable signal on the remote controller.
- **Ntrip RTK:** Users can supply their own RTK account. After configuring the account information, return to the main interface and proceed with the task.

Mobile Base Station: If using a mobile base station, follow the specific instructions provided with the base station equipment. Ensure the base station is set up in an open area with a recommended height of 3.5 meters or more for optimal signal reception.

10.10 Language Switching

To switch to another language, change the language settings on the remote controller, and the app will automatically follow the remote controller's system language. If the desired language is unavailable, the app will default to English.

Steps to change the language:

1. Swipe up on the home screen to access all apps, then tap on "Settings."
2. Tap "System" -> "Language & Input" -> "Language" -> "Add Language."
3. Select the desired language and drag it to the top of the list.

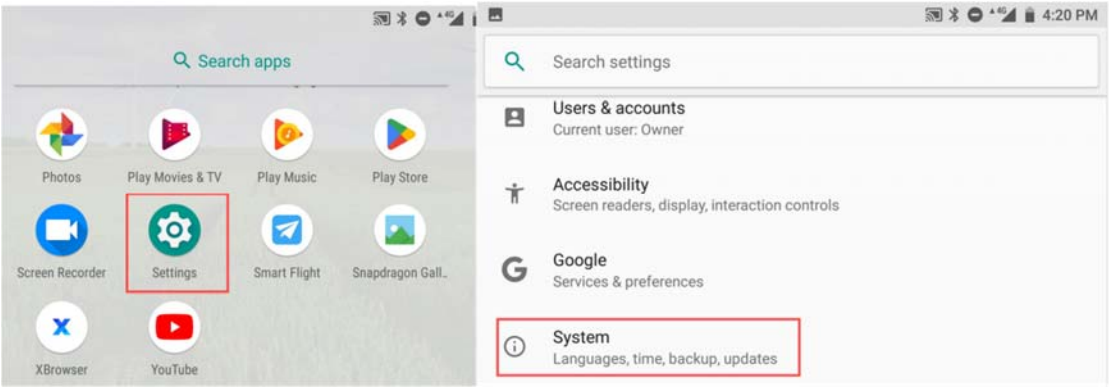

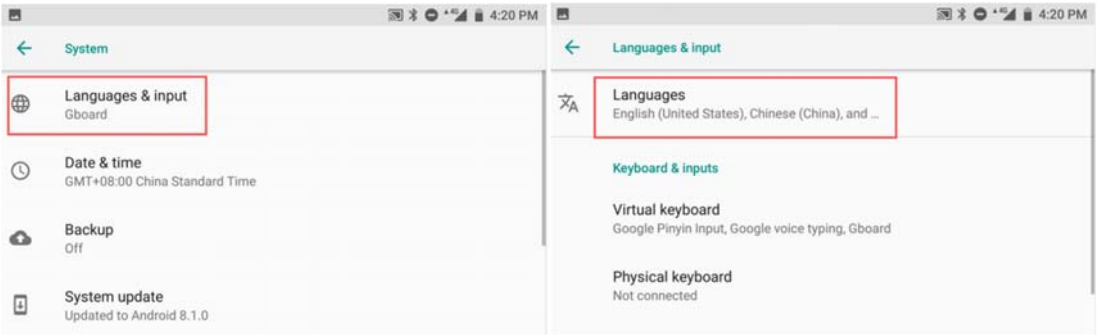

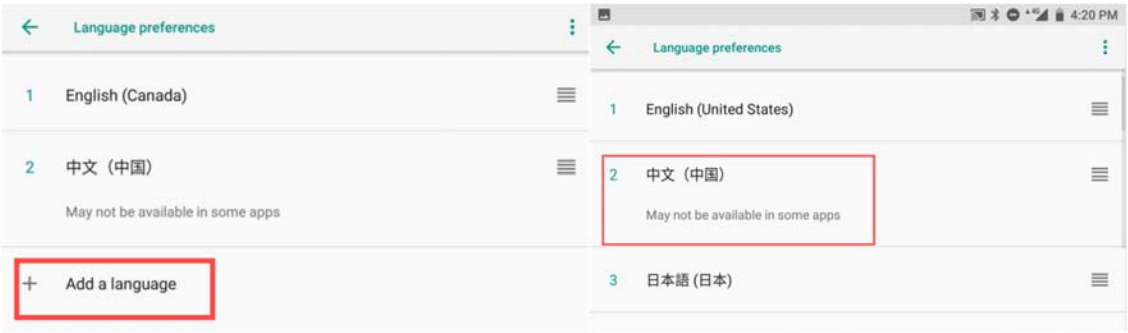

10.11 Map Switching

After switching the language, switch to the appropriate map to avoid misalignment between the positioning and map data. Chinese users typically use Amap, while overseas users may use Google Maps.

Steps to switch maps:

1. Open the Smart Flight app -> Enter the operation interface -> Tap on "More Settings" -> Select "Other Settings" -> Choose between Amap, Tianditu, or Google Maps.

---

11. Upgrades

Version Upgrades: The app will notify users when upgrades are available. If ignored, upgrade notifications will no longer appear. If there are firmware updates for the battery, each battery must be updated individually.

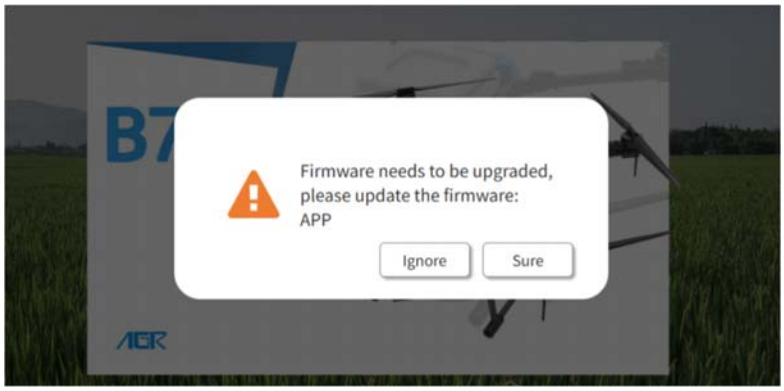

Device Information: Users can click the device icon to view details about the drone or remote controller and perform upgrades or downgrades.

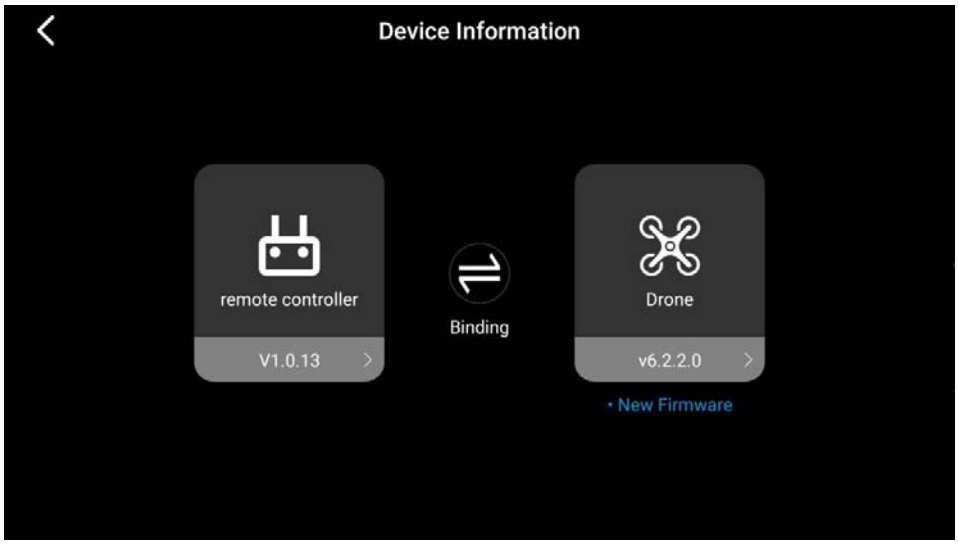

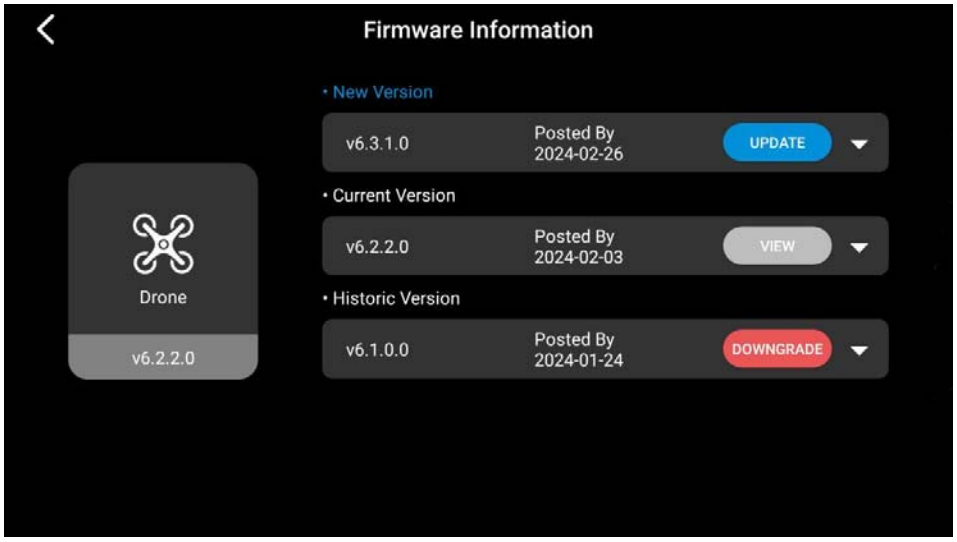

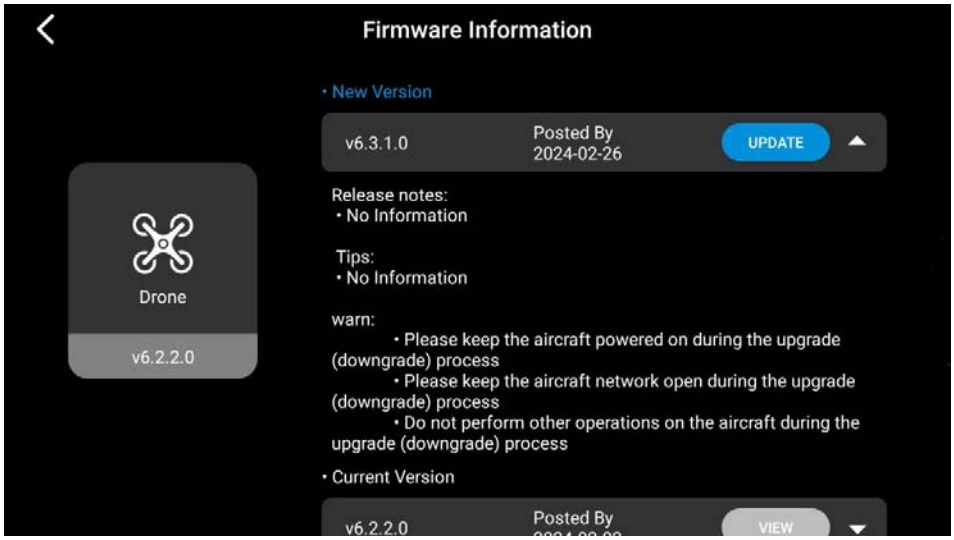

Upgrade Process: During the upgrade process, do not operate the drone. If the upgrade takes longer than 20 minutes, restart the drone and try again. If the problem persists, contact customer support.

11.1 Tare Weight Calibration

If the app displays a non-zero weight for an empty tank, use the tare weight calibration function. Ensure the drone is level and the tank is empty, then click "Tare Weight Calibration."

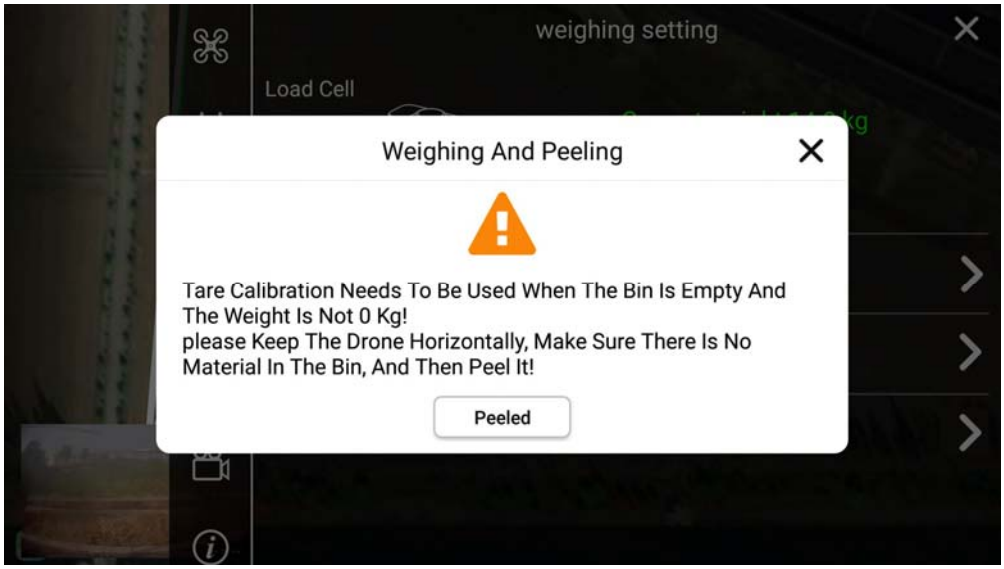

11.2 Weight Calibration

Add a specified amount of material to the tank and enter its weight to calibrate the weight sensor.

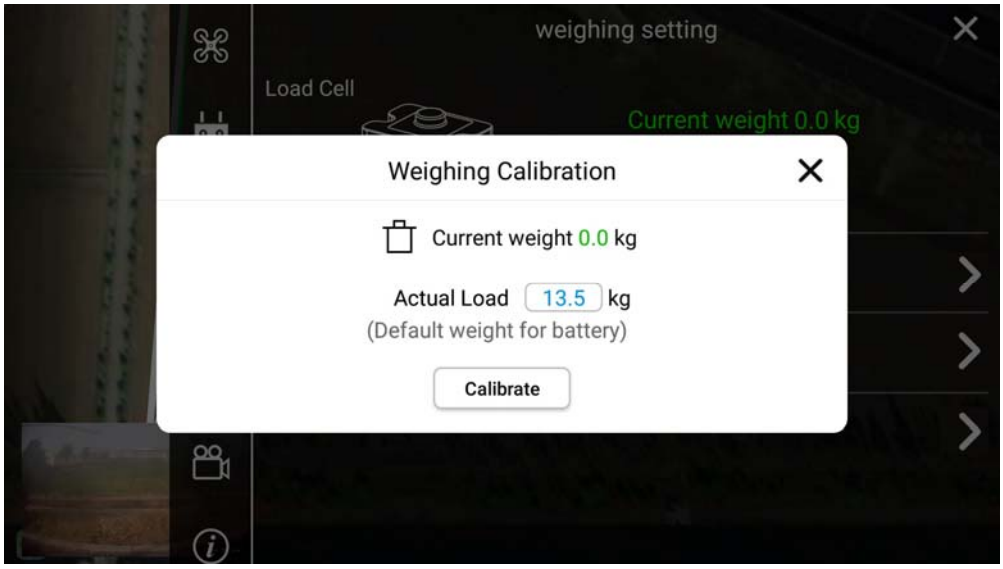

11.3 Weight Sensor Calibration

Input the parameters marked on the weight sensor and click "Reset Parameters."

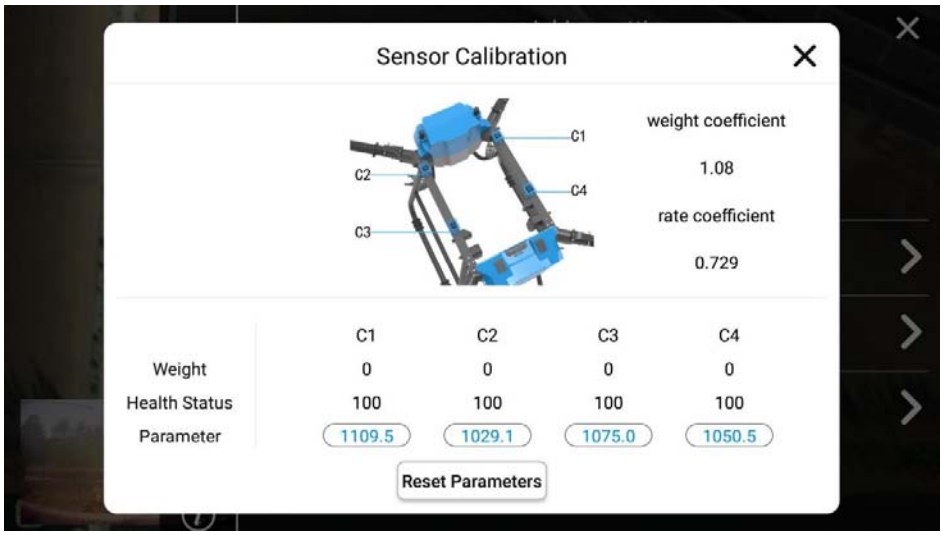

11.4 Compass Calibration

Compass calibration must be performed after assembling the drone, replacing the GPS module, or if the distance between the new and previous flight locations exceeds 100 kilometers. The app will prompt the user to calibrate the compass if necessary.

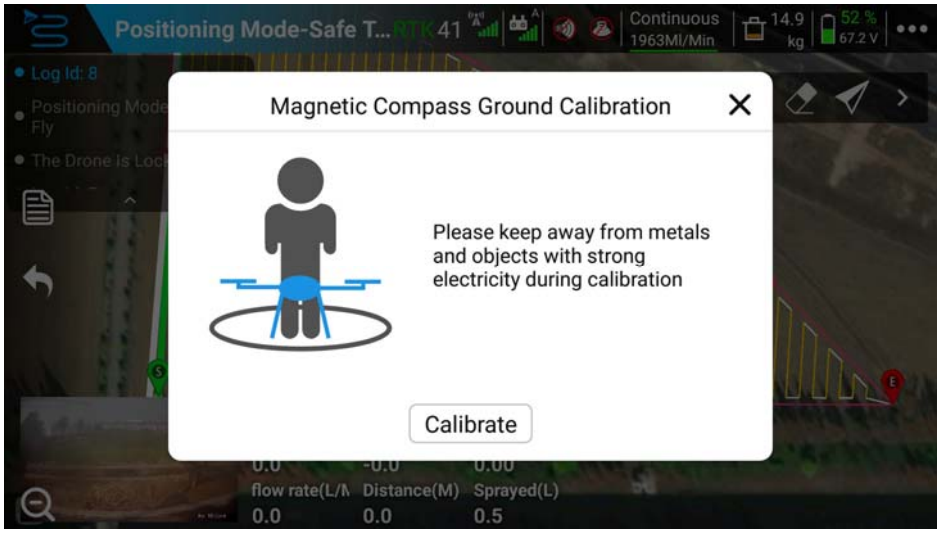

---

12. Starting and Stopping the Drone

12.1 Starting the Motors – Unlock and Takeoff

To unlock the drone, perform the inward push motion with both joysticks. The motors will start spinning at idle speed after 3 seconds. Push the throttle stick upward to take off.

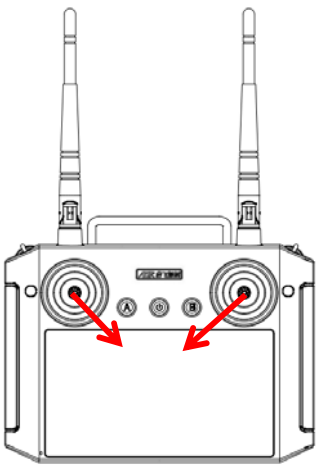

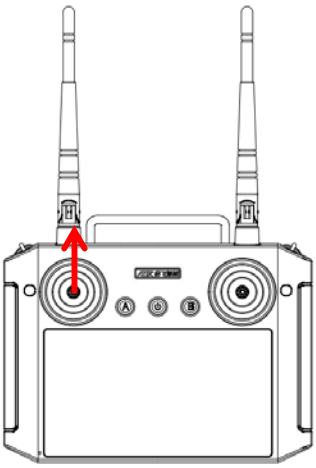

12.2 Flight Operation

Use the joysticks to control the drone's direction, altitude, and movement according to the selected control mode (American, Chinese, or Japanese hand mode). Refer to the app's interface for a visual guide to the controls.

12.3 Stopping the Motors – Landing and Lock

Pull the throttle stick down to land the drone. Once the drone is on the ground, continue holding the throttle down for 3 seconds to stop the motors. The drone will lock, and the propellers will stop spinning.

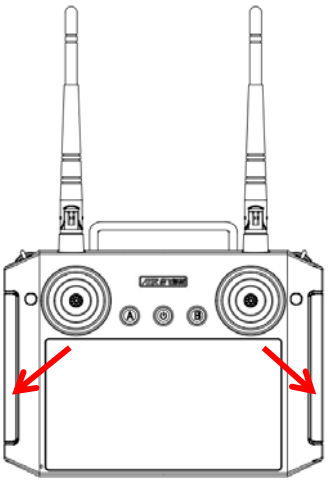

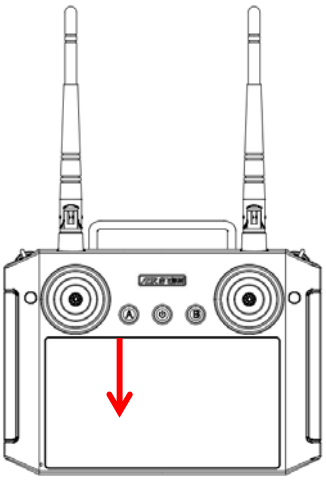

Note: Do not perform the outward push motion while the drone is in flight, as this will stop the motors and cause the drone to crash.

---

13. Safe Storage Procedures

1. Land the drone manually by gently lowering the throttle stick until the drone touches down on a flat, stable surface.
2. Once landed, pull the throttle stick down for 3 seconds until the motors stop.
3. After the motors stop, first disconnect the drone's power supply, then turn off the remote controller.

---

14. Flight Log

In the event of an incident or abnormal flight behavior, users can analyze the flight log to accurately identify and resolve issues.

Local Log Upload: Connect the remote controller to the drone using the provided cable to upload flight logs. Ensure that the drone is powered off when copying logs.

15. PC Agricultural Platform

Use the Smart Flight account to log into the management platform http://www.agrobot-uav.com to view real-time drone information, battery statistics, operational data, flight paths, and more.

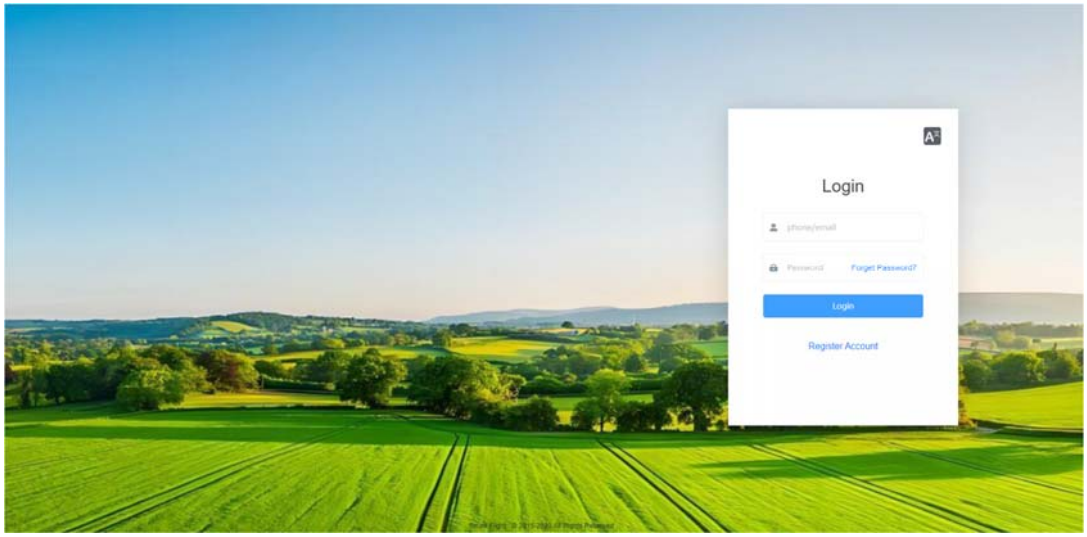

Management Functions:

- **Drone Management:** View, lock, or bind agricultural drones to your account, and review operation records.
- **Real-Time Supervision:** Monitor drone activity and flight operator status in real-time.
- **Flight Statistics:** View detailed flight and operation statistics, including exportable logs in Excel format.
- **Field Management:** Upload, share, and manage planned fields for operations.

---

16. Appendix

Specifications

- **Frame Dimensions:**
- Symmetrical motor axle distance: 2350mm
- External dimensions: 2090 × 1830 × 775mm (excluding spray arms and propellers)
- **Propellers:**
- Material: Carbon fiber
- Diameter: 56 inches
- **Operation Tank Capacity:**
- 50L
- **Spray Nozzles:**

- 4 centrifugal nozzles
- Maximum spray flow rate: 12L/min
- Spray width: 6-12 meters depending on crop height and type
- **Flight Performance:**
- Maximum flight speed: 10m/s
- Maximum altitude: 2000m
- Maximum takeoff weight: 150kg
- **Battery:**
- 18S 30,000mAh lithium battery, 76.5V
- Battery lifespan: 500 cycles

---

17. Manufacturer Information

Manufacturer: DMR Technologies

Address: 2050 15th St., Detroit, MI 48216,USA

FCC Information

This device has been tested and found to comply with the limits for a Class B digital device, pursuant to Part 15 of the FCC Rules. These limits are designed to provide reasonable protection against harmful interference in a residential installation. This device generates, uses and can radiate radio frequency energy and, if not installed and used in accordance with the instructions, may cause harmful interference to radio communications.

However, there is no guarantee that interference will not occur in a particular installation. If this device does cause harmful interference to radio or television reception, which can be determined by turning the device off and on, the user is encouraged to try to correct the interference by one or more of the following measures:

--Reorient or relocate the receiving antenna.

--Increase the separation between the device and receiver.

--Connect the device into an outlet on a circuit different from that to which the receiver is connected.

--Consult the dealer or an experienced radio/TV technician for help

Changes or modifications not expressly approved by the party responsible for compliance could void the user's authority to operate the equipment

FCC Radiation Exposure Statement

The antennas used for this transmitter must be installed to provide a separation distance of at least 20 cm from all persons and must not be co-located for operating in conjunction with any other antenna or transmitter.